ROCSTA
WORKSHOP MANUAL

• AM102

ASIA MOTORS

ROCSTA
WORKSHOP MANUAL

FOREWORD

This workshop manual has been prepared to provide information covering normal service, repair and maintenance for ASIA ROCSTA.

Information in this manual is divided into Groups, each Group covers a general vehicle system like transmission, steering, etc.

Each Group also contains Summary, Specification, Troubleshooting, Removal and Installation, Adjustment, Diagnosis and Testing.

For satisfaction of Asia customer, proper service and maintenance by technician is essential.
So it is important that service personnel fully understand the contents of this manual and should keep in a handy place for quick and easy reference.

The information, photographs, drawings and specifications contained in this manual are best available at the time of printing. So, it is recommended that this manual should be kept up-to-date by receiving of new information.

Asia Motors reserves the right to change the specifications and contents of this manual without obligation and advance notice.
We sure this workshop manual will help you with maintaining and keeping the best condition of this vehicle.

December, 1994
ASIA MOTORS Co., Inc.

CONTENTS

GENERAL INFORMATION	0
ENGINE	1A·B
LUBRICATION SYSTEM	2A·B
COOLING SYSTEM	3A·B
FUEL, IN. AND EXH. SYSTEM	4A·B
ENGINE ELECTRICAL SYSTEM	5
CLUTCH	6
TRANSMISSION	7
PROPELLER SHAFT	8
FRONT & REAR AXLE	9
STEERING	10
BRAKES	11
WHEELS AND TIRES	12
SUSPENSION	13
BODY	14
BODY ELECTRICAL SYSTEM	15
TECHNICAL DATA	22
SPECIAL TOOLS	23

GENERAL INFORMATION

- FUNDAMENTAL PROCEDURES ..... 0—2
- JACK AND SAFETY STAND(RIGID RACK) POSITIONS ..... 0—4
- VEHICLE LIFT POSITIONS ..... 0—6
- TOWING ..... 0—7
- TOWING HOOK ..... 0—7
- TOW ROPE POSITIONS ..... 0—7
- CHASSIS NUMBER LOCATION ..... 0—8
- UNITS ..... 0—8
- ABBREVIATIONS ..... 0—8

ENGINE

- OUTLINE ..... 1A—2
- SPECIFICATIONS ..... 1A—4
- TROUBLESHOOTING GUIDE ..... 1A—4
- INSPECTION AND ADJUSTMENT ..... 1A—6
- DISASSEMBLY OF ENGINE ..... 1A—8
- INSPECTION AND REPAIR ..... 1A—16
- ASSEMBLY OF ENGINE ..... 1A—27

ENGINE (GASOLINE)

- STRUCTURAL VIEW ..... 1B—2
- SPECIFICATIONS ..... 1B—
- TROUBLESHOOTING GUIDE ..... 1B—4
- DISASSEMBLY OF ENGINE ..... 1B—6
- INSPECTION AND REPAIR ..... 1B—14
- ASSEMBLY OF ENGINE ..... 1B—25

LUBRICATION SYSTEM

- OUTLINE ..... 2A—2
- SPECIFICATIONS ..... 2A—3
- TROUBLESHOOTING GUIDE ..... 2A—4
- INSPECTION ..... 2A—5
- OIL BYPASS FILTER ..... 2A—5
- OIL PAN ..... 2A—7
- OIL PUMP ..... 2A—9
- OIL COOLER ..... 2A—11
- OIL JET ..... 2A—13

LUBRICATION SYSTEM

- FLOW CHART ..... 2B—2
- SPECIFICATIONS ..... 2B—3
- TROUBLESHOOTING GUIDE 2B
- OIL FILTER ..... 2B—3
- OIL PAN ..... 2B—4
- OIL PUMP ..... 2B—5
- OIL PRESSURE ..... 2B—7

COOLING SYSTEM

- OUTLINE ..... 3A—2
- SPECIFICATIONS ..... 3A—3
- TROUBLESHOOTING GUIDE ..... 3A—4
- COOLANT ..... 3A—4
- THERMOSTAT ..... 3A—5
- RADIATOR ..... 3A—6
- RADIATOR CAP ..... 3A—7
- WATER PUMP ..... 3A—7

COOLING SYSTEM

- OUTLINE ..... 3B—2
- SPECIFICATIONS ..... 3B—3
- TROUBLESHOOTING GUIDE ..... 3B—3
- COOLANT 3E
- THERMOSTAT ..... 3B—4
- RADIATOR ..... 3B—5
- RADIATOR CAP ..... 3B—5
- WATER THERMO-SWITCH ..... 3B—6
- WATER PUMP ..... 3B—7

FUEL, INTAKE· EXHAUST SYSTEM

- OUTLINE ..... 4A—2
- SPECIFICATIONS ..... 4A—3
- TROUBLESHOOTING GUIDE ..... 4A—4
- FUEL LINE ..... 4A—5
- FUEL FILTER ..... 4A—5
- INJECTION PUMP ..... 4A—7
- FUEL CUT VALVE ..... 4A—13
- INJECTION NOZZLE ..... 4A—13
- CSD CABLE AND LINKAGE ..... 4A—15
- ENGINE SPEED ..... 4A—16
- AIR-BLEEDING ..... 4A—17

FUEL, INTAKE· EXHAUST SYSTEM

- OUTLINE ..... 4B—2
- SPECIFICATIONS ..... 4B—5
- TROUBLESHOOTING GUIDE ..... 4B—6
- ACCELERATOR LINKAGE ..... 4B—7
- FUEL PUMP ..... 4B—8
- FUEL TANK ..... 4B—9
- FUEL FILTER ..... 4B—9
- CARBURETOR ..... 4B—10
- EGR(Emission Gas Regulation) CONTROL SYSTEM ..... 4B—22
- EGR MODULATOR VALVE ..... 4B—23
- EGR SOLENOID ..... 4B—23
- EVAPORATIVE EMISSION CONTROL SYSTEM ..... 4B—24
- IDLE-UP SYSTEM ..... 4B—26
- IDLE-UP ELECTRIC LOAD OR POWER STEERING ..... 4B—27
- POSITIVE CRANKCASE VENTILATION(PCV) SYSTEM ..... 4B—29
- AIR INLET TEMPERATURE CONTROL SYSTEM ..... 4B—30
- HOT IDLE COMPENSATION SYSTEM ..... 4B—31

ENGINE ELECTRICAL SYSTEM

- OUTLINE ..... 5—2
- SPECIFICATIONS ..... 5—3
- TROUBLESHOOTING GUIDE ..... 5—3
- BATTERY ..... 5—4
- ALTERNATOR ..... 5—5
- STARTER-A(Diesel engine : 2.0KW type) ..... 5—13
- STARTER-B(Gasoline engine : 0.95KW type) ..... 5—21
- QUICK START SYSTEM(QSS) ..... 5—28
- GLOW PLUG ..... 5—29
- VACUUM PUMP ..... 5—29
- DRIVE BELT ..... 5—30
- SPARK PLUG ..... 5—31
- HIGH-TENSION LEAD ..... 5—31
- IGNITION COIL ..... 5—32
- DISTRIBUTOR ..... 5—32

CLUTCH

- OUTLINE ..... 6—2
- SPECIFICATIONS ..... 6—3
- TROUBLESHOOTING GUIDE ..... 6—3
- ON-VEHICLE MAINTENANCE ..... 6—4
- INSPECTION AND ADJUSTMENT ..... 6—4
- CLUTCH PEDAL ..... 6—5
- MASTER CYLINDER ..... 6—7
- RELEASE CYLINDER ..... 6—10
- CLUTCH AND FLYWHEEL ..... 6—13

TRANSMISSION

- OUTLINE ..... 7—2
- SPECIFICATIONS ..... 7—3
- TROUBLESHOOTING GUIDE ..... 7—3
- INSPECTION ..... 7—4
- REMOVAL OF TRANSMISSION ASSEMBLY ..... 7—5
- INSTALLATION OF TRANSMISSION ASSEMBLY ..... 7—6
- CLUTCH HOUSING ASSEMBLY ..... 7—7
- CONTROL CASE ASSEMBLY ..... 7—8
- EXTENSION HOUSING ASSEMBLY ..... 7—9
- TRANSMISSION CASE ASSEMBLY ..... 7—10
- MAIN DRIVE SHAFT ASSEMBLY ..... 7—12
- ASSEMBLY OF TRANSMISSION ASSEMBLY ..... 7—14
- TRANSFER ASSEMBLY ..... 7—18
- FRONT & REAR COVER (ONLY INDIRECT TYPE TRANSFER) 7—19
- REAR CASE ASSEMBLY ..... 7—20
- FRONT CASE, MAIN SHAFT AND IDLE GEAR ASSEMBLY ..... 7—21
- ASSEMBLY OF TRANSFER ASSEMBLY ..... 7—22

PROPELLER SHAFT

- OUTLINE ..... 8—2
- SPECIFICATIONS ..... 8—2
- TROUBLESHOOTING GUIDE ..... 8—3
- ON-VEHICLE INSPECTION ..... 8—3
- REMOVAL ..... 8—4
- DISASSEMBLY ..... 8—5
- ASSEMBLY ..... 8—6
- INSPECTION ..... 8—7
- INSTALLATION ..... 8—7

FRONT AND REAR AXLES

- OUTLINE ..... 9—2
- SPECIFICATIONS ..... 9—3
- TROUBLESHOOTING GUIDE ..... 9—4
- FRONT AXLE ..... 9—5
- REAR AXLE ..... 9—12
- DIFFERENTIAL ..... 9—17

STEERING

- OUTLINE ..... 10—2
- SPECIFICATIONS ..... 10—3
- TROUBLESHOOTING GUIDE ..... 10—3
- INSPECTION AND ADJUSTMENT ..... 10—5
- WHEEL ALIGNMENT ..... 10—6
- STEERING WHEEL AND COLUMN ..... 10—8
- GEAR BOX ..... 10—10
- MANUAL STEERING GEAR BOX ..... 10—12
- POWER STEERING GEAR BOX ..... 10—15
- POWER STEERING OIL PUMP ..... 10—19

BRAKE

- OUTLINE ..... 11—2
- SPECIFICATIONS ..... 11—2
- TROUBLESHOOTING GUIDE ..... 11—2
- ON-VEHICLE MAINTENANCE ..... 11—4
- INSPECTION AND ADJUSTMENT ..... 11—4
- BRAKE PEDAL ..... 11—6
- MASTER CYLINDER ..... 11—8
- POWER BRAKE UNIT ..... 11—11
- VACUUM PUMP ..... 11—19
- FRONT DISC BRAKE ..... 11—21
- REAR DRUM BRAKE ..... 11—23
- WHEEL CYLINDER ..... 11—25
- BACK PLATE ..... 11—26
- BRAKE LINES ..... 11—27

GENERAL INFORMATION 0

0

- FUNDAMENTAL PROCEDURES ..... 0—2
  - PROTECTION OF THE VEHICLE ..... 0—2
  - A WORD ABOUT SAFETY ..... 0—2
  - PREPARATION OF TOOLS AND MEASURING EQUIPMENT ..... 0—2
  - SPECIAL TOOLS ..... 0—2
  - REMOVAL OF PARTS ..... 0—3
  - DISASSEMBLY ..... 0—3
  - INSPECTION DURING DISASSEMBLY ..... 0—3
  - ARRANGEMENT OF DISASSEMBLED PARTS ..... 0—3
  - CLEANING DISASSEMBLED PARTS ..... 0—4
  - ASSEMBLY ..... 0—4
  - ADJUSTMENTS ..... 0—4
  - ELECTRICAL SYSTEM ..... 0—5
  - RUBBER PARTS AND TUBING ..... 0—5
- JACK AND SAFETY STAND(RIGID RACK) POSITIONS ..... 0—5
  - FRONT END ..... 0—5
  - REAR END ..... 0—6
- VEHICLE LIFT POSITIONS ..... 0—6
  - FRONT END ..... 0—6
  - REAR END ..... 0—6
- TOWING ..... 0—7
  - WITH MANUAL TRANSMISSION ..... 0—7
- TOWING HOOK ..... 0—7
- TOW ROPE POSITIONS ..... 0—7
  - FRONT END ..... 0—7
  - REAR END ..... 0—7
- CHASSIS NUMBER LOCATION ..... 0—7
- UNITS ..... 0—8
- ABBREVIATIONS ..... 0—8

FUNDAMENTAL PROCEDURES

NOTES, CAUTIONS, AND WARNINGS

As you read through the procedures, you will come across **NOTES, CAUTIONS,** and **WARNINGS.** Each one is therefore a specific purpose. **NOTES** give you **added information** that will help you to complete a particular procedure. **CAUTIONS** are given to prevent you from making an error that could **damage the vehicle. WARNINGS** remind you to be especially careful in those areas where carelessness can cause **personal injury.** The following list contains some general **WARNINGS** you should follow when you work on a vehicle.

PROTECTION OF THE VEHICLE

Always be sure to cover fenders, seats, and floor areas before starting work.

A WORD ABOUT SAFETY

It is imperative that the following precautions be followed when jacking up the vehicle.

1. Wheels must be blocked.
2. Take care to use only specified jacking positions.
3. Support the vehicle with safety stands(rigid racks).

The engine should be started only after first checking to be sure it is clear of tools, people, etc.

PREPARATION OF TOOLS AND MEASURING EQUIPMENT

Be sure all needed tools and measuring equipment are available and ready for use.

SPECIAL TOOLS

Be sure to use the specified special tools when they are required. Do not attempt to use substitutes.

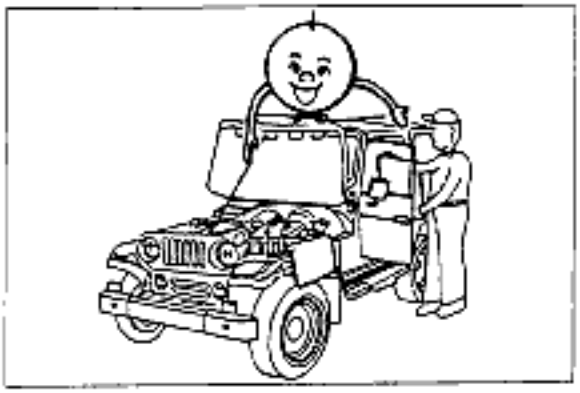

Fig. 0-1

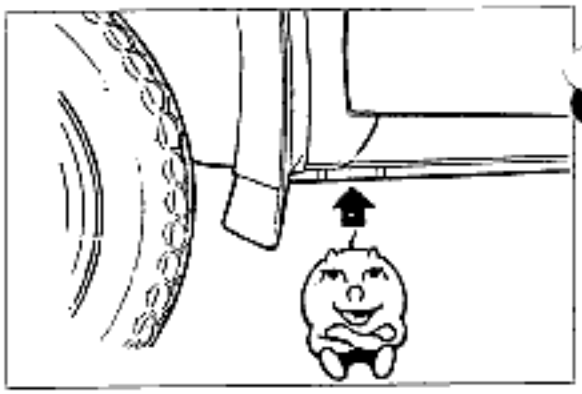

Fig. 0-2

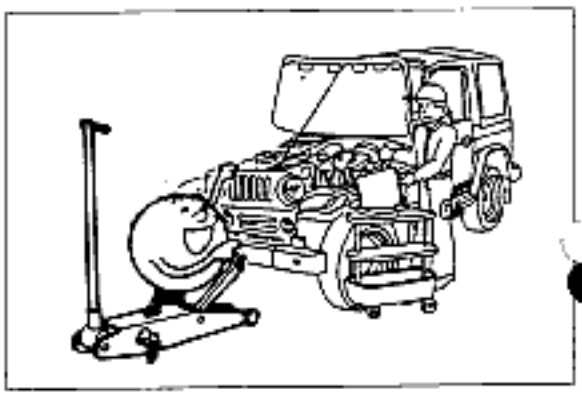

Fig. 0-3

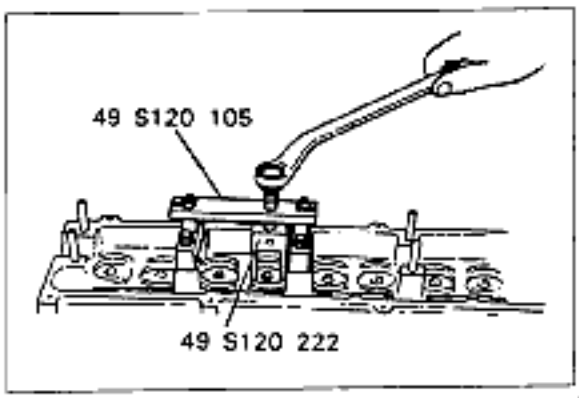

Fig. 0-4

◈ REMOVAL OF PARTS

When checking a problem, try at the same time to determine the cause, and begin work after first determining which parts must be removed and/or disassembled.

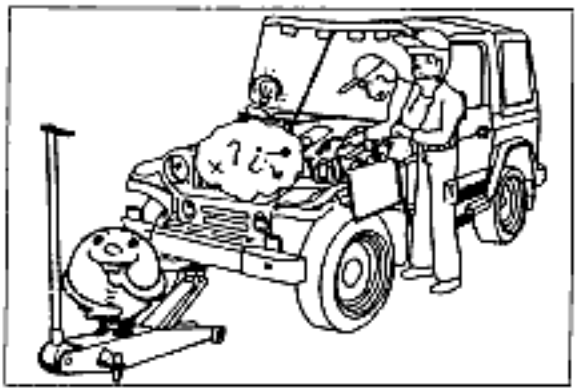

Fig. 0-5

◈ DISASSEMBLY

If the disassembly procedure is complex and/or many parts are to be disassembled, the various parts should be identified(in a way which will not affect their performance of external appearance) so that correct assembly will be easier and faster.

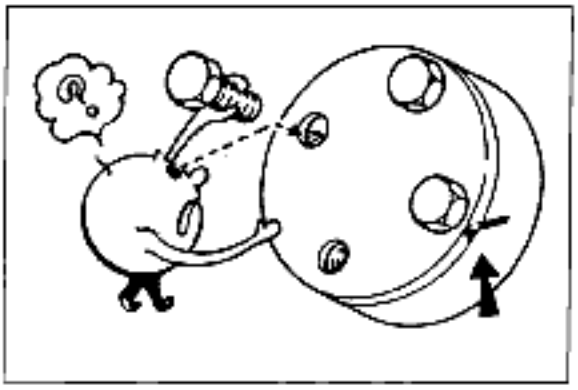

Fig. 0-6

◈ INSPECTION DURING DISASSEMBLY

Each part should be carefully inspected, as it is disassembled, for malfunctioning operation, deformation, damage, etc.

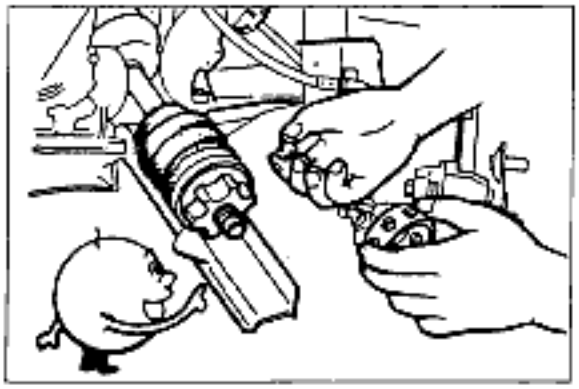

Fig. 0-7

◈ ARRANGEMENT OF DISASSEMBLED PARTS

All disassembled parts should be carefully arranged for later assembly. Be sure to separate parts which are to be replaced from those to be reused.

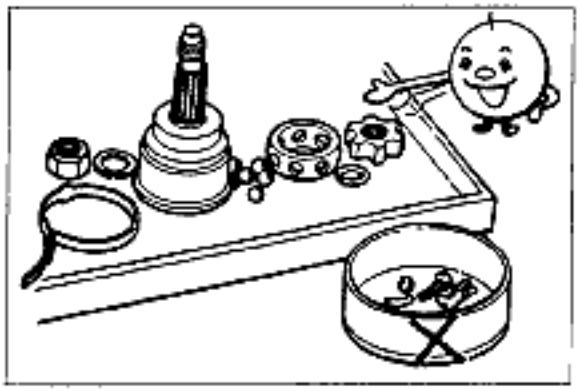

Fig. 0-8

◈ CLEANING DISASSEMBLED PARTS

All parts to be reused should be carefully and thoroughly cleaned by the appropriate method.

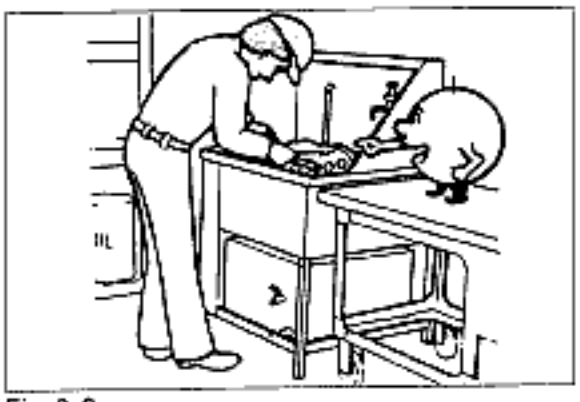

Fig. 0-9

◈ ASSEMBLY

All parts should be assembled while carefully following the standard values for such items as tightening torques, adjustment values, etc.

As a rule, the following parts should be replaced with new ones when removing.

1. Oil seals
2. Gaskets
3. O-rings
4. Lock washers
5. Cotter pins
6. Nylon nuts

Depending on their locations, sealant should be applied to gaskets, oil should be applied to moving components of parts, and the specified oil or grease should be applied at the prescribed locations(Oil seals, etc.) before assembly.

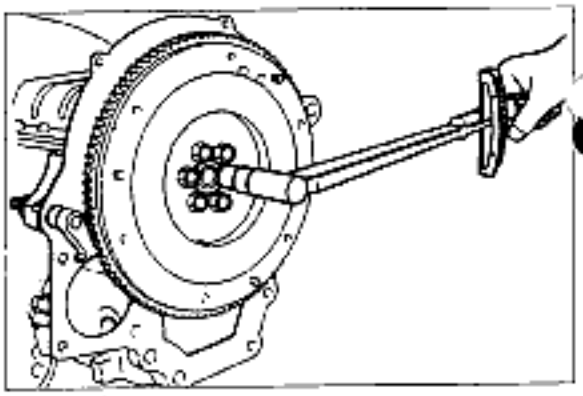

Fig. 0-10

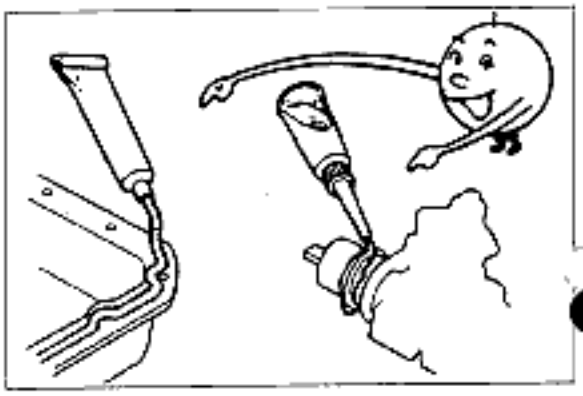

Fig. 0-11

◈ ADJUSTMENTS

Gauges and testers should be used to make correct adjustments to standard values.

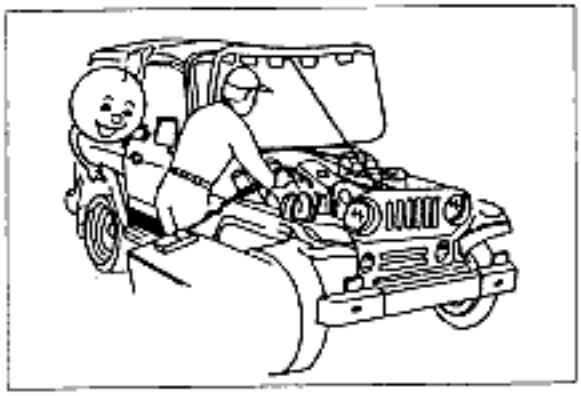

Fig. 0-12

◆ ELECTRICAL SYSTEM

Be sure to disconnect the battery cable from the negative(−) terminal of the battery.
When connectors are to be disconnected, never pull on the wiring itself.
When locking connectors are to be connected, insert them all the way in until a "click" is heard.
Handle sensors and relays carefully take care not to drop or knock them against other parts.

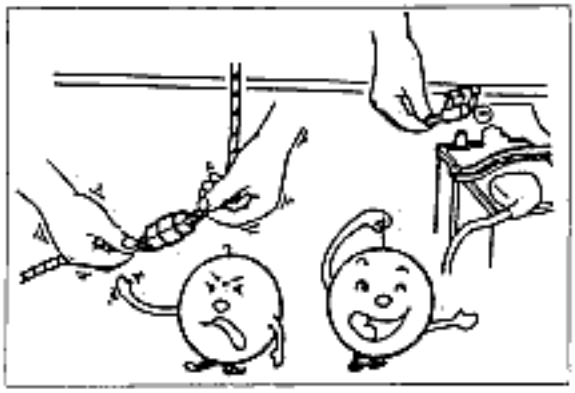

Fig. 0-13

◆ RUBBER PARTS AND TUBING

Be careful that rubber parts and tubing do not come in contact with gasoline or oil.

Fig. 0-14

◇ JACK AND SAFETY STAND(RIGID RACK) POSITIONS

◆ FRONT END

JACK POSITION
Differential part of the axle housing

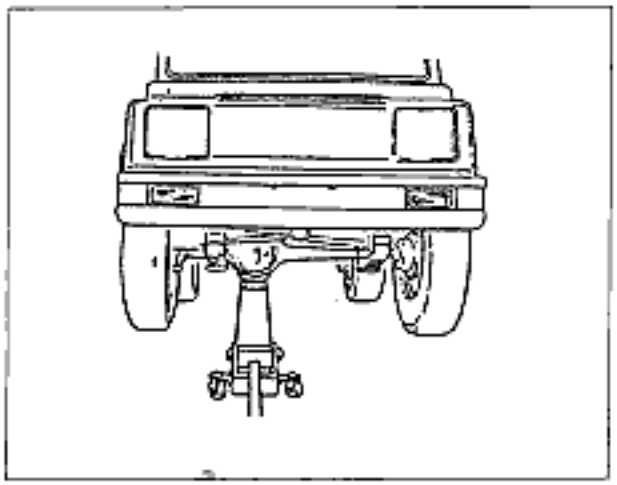

Fig. 0-15

SAFETY STAND POSITIONS
Chassis frame part

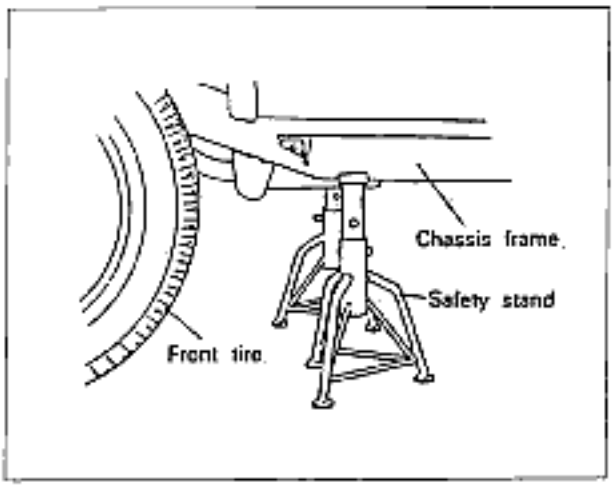

Fig. 0-16

REAR END

JACK POSITION

Differential part of the axle housing

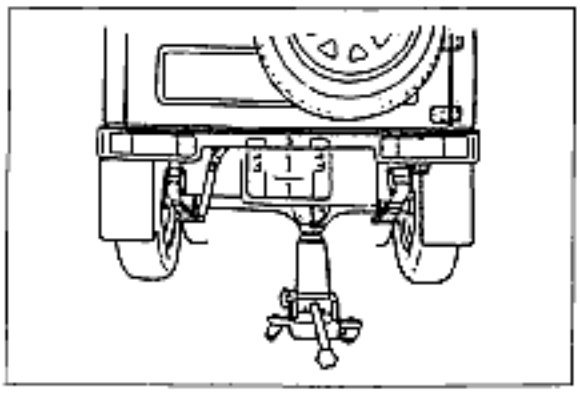

Fig. 0-17

SAFETY STAND

Chassis frame part

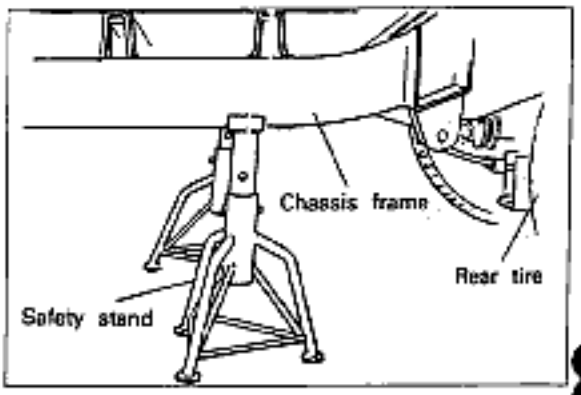

Fig. 0-18

VEHICLE LIFT POSITIONS

FRONT END

Chassis frame part

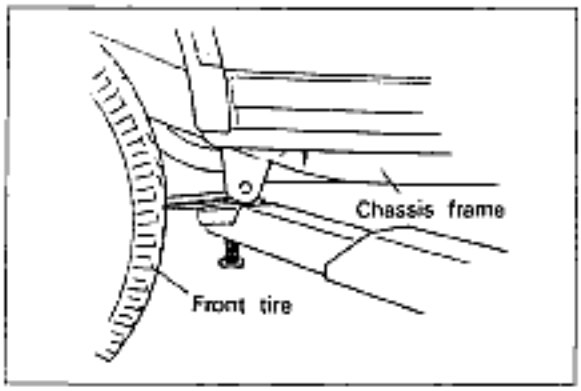

Fig. 0-19

REAR END

Chassis frame part

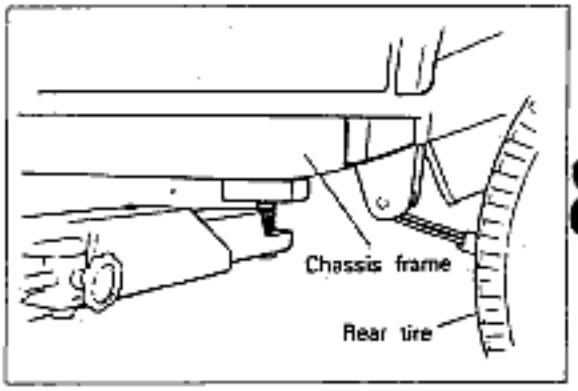

Fig. 0-20

TOWING

Proper towing equipment is necessary to prevent damage to the vehicle during any towing operation. Laws and regulations applicable to vehicles in tow must always be observed.
Release the parking brake, place the transmission shift lever in neutral, set the ignition switch in the ACC position, and the driving mode to the 2WD. As a rule, towed vehicles should be pulled with the driving wheels off the ground.

WITH MANUAL TRANSMISSION

If the transmission, rear axle, and steering system are not damaged, the vehicle may be towed on all four wheels. If any of these components are damaged, use a towing dolly.

TOWING HOOK

After attaching a rope to the towing hook, tow the vehicle.

Caution

Do not attempt to tow with other parts of the vehicle, this could result in serious damage to the vehicle, so only the towing hook can be used in towing.

CHASSIS NUMBER LOCATION

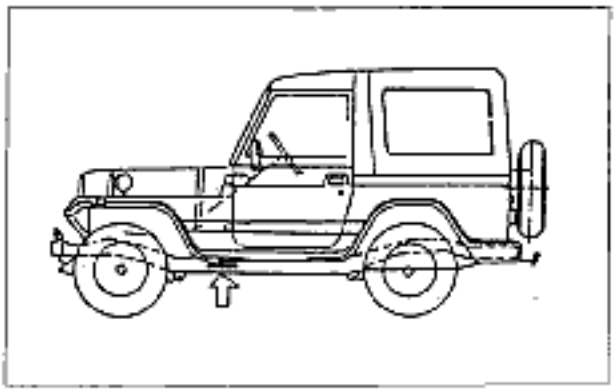

Fig. 0-23

TOW ROPE POSITIONS

FRONT END

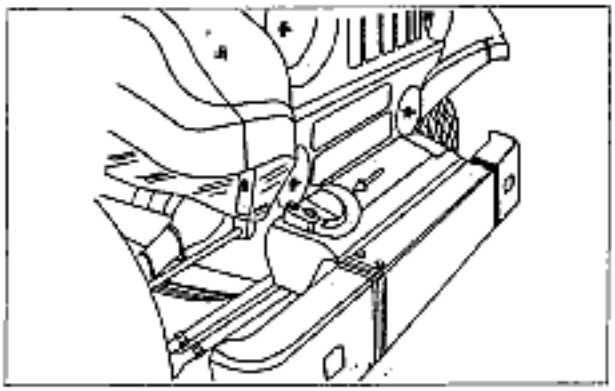

Fig. 0-21

REAR END

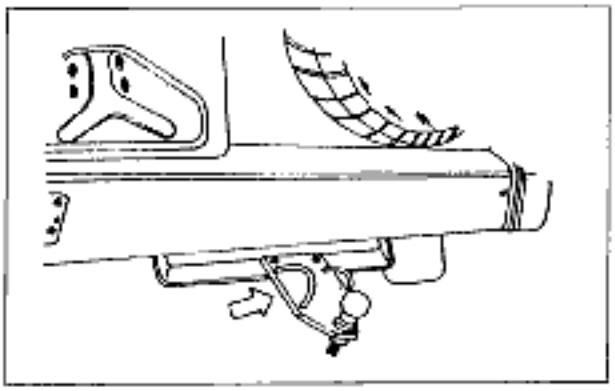

Fig. 0-22

UNITS

m·kg(ft·lb or in·lb)	Torque
rpm	Revolutions per minute
A	Ampere(s) (current)
V	Volts(S) (Voltage)
Ω	Ohm(s) (resistance)
kg/cm²(lb/in²)	Pressure (Usually positive)
mmHg(inHg)	Pressure (Usually positive)
W	Watt
liters(US qt, Imp qt)	Volume
mm(in)	Length

ABBREVIATIONS

ABDC	After bottom dead center
A/C	Air conditioner
ACC	Accessories
ATDC	After top dead center
BBDC	Before bottom dead center
BTDC	Before top dead center
E/L	Electrical load
ELR	Emergency locking retractor
EX	Exhaust
GND	Ground
IC	Electric Integrated circuit
IG	Ignition
IN	Intake
INT	Intermittent
LH	Left hand
M	Motor
M/S	Manual steering
MTX	Manual transaxle
OFF	Switch off
ON	Switch on
PCV	Positive crankcase ventilation
P/S	Power steering
PRC	Pressure regulator control
P/W	Power window
RH	Right hand
SOHC	Single overhead camshaft
SST	Special service tool
ST	Start
SW	Switch
TDC	Top dead center

ENGINE

1A

- **OUTLINE** ..... 1A—2
  - OUTLINE OF CONSTRUCTION ..... 1A—2
  - VALVE MECHANISM ..... 1A—3
  - SLANT BOTTOM SWIRL CHAMER ..... 1A—3
  - CYLINDER HEAD BOLT ..... 1A—3
- **SPECIFICATIONS** ..... 1A—4
- **TROUBLESHOOTING GUIDE** ..... 1A—4
- **INSPECTION AND ADJUSTMENT** ... 1A—6
  - CHECKING OF COMPRESSION PRESSURE ..... 1A—6
  - MEASURE OF THE VALVE CLEARANCE ..... 1A—6
  - ADJUSTMENT OF THE VALVE CLEARANCE ... 1A—7
- **DISASSEMBLY OF ENGINE** ..... 1A—8
  - PARTS RELATED TO ENGINE AUXILIARY ..... 1A—8
  - PARTS RELATED TO TIMING MECHANISM ..... 1A—9
  - PARTS RELATED TO CYLINDER HEAD ..... 1A—10
  - PARTS RELATED TO LUBRICATION SYSTEM AND FLYWHEEL ..... 1A—11
  - PARTS RELATED TO CRANKSHAFT AND PISTON ASSEMBLY ..... 1A—12
  - DISASSEMBLY PROCEDURES ..... 1A—13
- **INSPECTION AND REPAIR** ..... 1A—16
  - MAINTENANCE NOTES ..... 1A—16
  - CYLINDER HEAD COMPLETE ..... 1A—16
  - CAMSHAFT ..... 1A—22
  - CYLINDER BLOCK ..... 1A—22
  - PISTONS AND PISTON RINGS ..... 1A—23
  - CONNECTING ROD ..... 1A—24
  - CRANKSHAFT ..... 1A—25
  - MAIN AND CONNECTING ROD BEARINGS ..... 1A—25
  - FLYWHEEL ..... 1A—26
  - TIMING BELT ..... 1A—26
  - TENSIONER ..... 1A—27
  - TIMING BELT PULLEY, CAMSHAFT PULLEY, INJECTION PUMP PULLEY ..... 1A—27
  - TIMING BELT COVER(LEFT, RIGHT) ..... 1A—27
- **ASSEMBLY OF ENGINE** ..... 1A—27
  - ASSEMBLY NOTES ..... 1A—27
  - CYLINDER HEAD COMPLETE ..... 1A—28
  - PISTON AND CONNECTING ROD ..... 1A—28
  - CRANKSHAFT ..... 1A—29
  - REAR COVER ASSEMBLY ..... 1A—33
  - OIL PUMP BODY ASSEMBLY ..... 1A—33
  - OIL STRAINER, OIL BAFFLE PLATE AND OIL PAN ..... 1A—34
  - END PLATE, FLYWHEEL ASS'Y CLUTCH COVER ..... 1A—35
  - TIMING BELT CRANK PULLEY ..... 1A—36
  - CYLINDER HEAD COMPLETE ..... 1A—36
  - ENGINE HANGER, OIL LEVEL GAUGE GUIDE, INJECTION PUMP STAY ..... 1A—38
  - WATER PUMP ASS'Y AND INJECTION PUMP BRACKET ..... 1A—39
  - FRONT SEAL PLATE AND CAMSHAFT PULLEY ..... 1A—39
  - THERMOSTAT AND COOLING FAN PULLEY BEARING COMPLETE ..... 1A—40
  - INJECTION PUMP AND PULLEY ..... 1A—40
  - TIMING BELT TENSIONER ..... 1A—41
  - TIMING BELT COVER ..... 1A—42
  - CRANKSHAFT PULLEY ..... 1A—43
  - INJECTION PIPE, FUEL LEAK PIPE AND OIL LEVEL GAUGE ..... 1A—43
  - EXHAUST AND INTAKE MANIFOLD ..... 1A—44
  - OIL COOLER, OIL FILTER ..... 1A—44

⊠ OUTLINE

◈ OUTLINE OF CONSTRUCTION

The new MAGMA diesel engine, by using the latest technological advances, is an excellent balance of output, fuel consumption, durability and quiet operation.
Its main features are
1. Aluminum alloy cylinder head
2. Direct-drive OHC(overhead camshaft)
3. Timing belt
4. New tightening method for cylinder head bolts
5. Oil baffle plate for vibration reduction

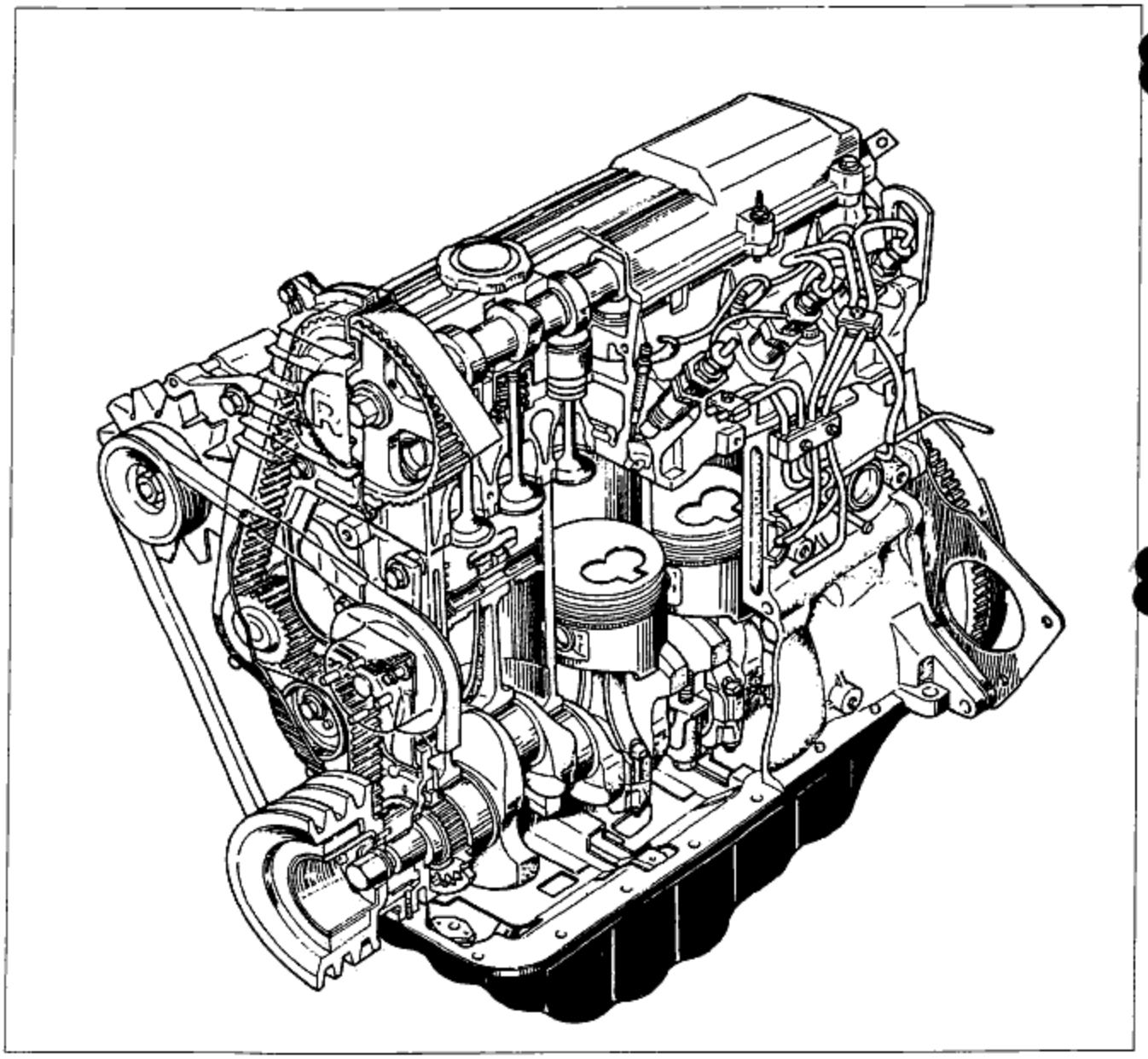

Fig. 1A-1

◈ VALVE MECHANISM

By employing a direct-drive OHC(overhead camshaft), the parts, such as the push rods, rocker arms, rocker arm shafts, etc., used in the OHV(overhead valve) engine are not necessary. This has resulted in reduced size and weight, decreased mechanical loss, and a great improvement of high rotation efficiency.

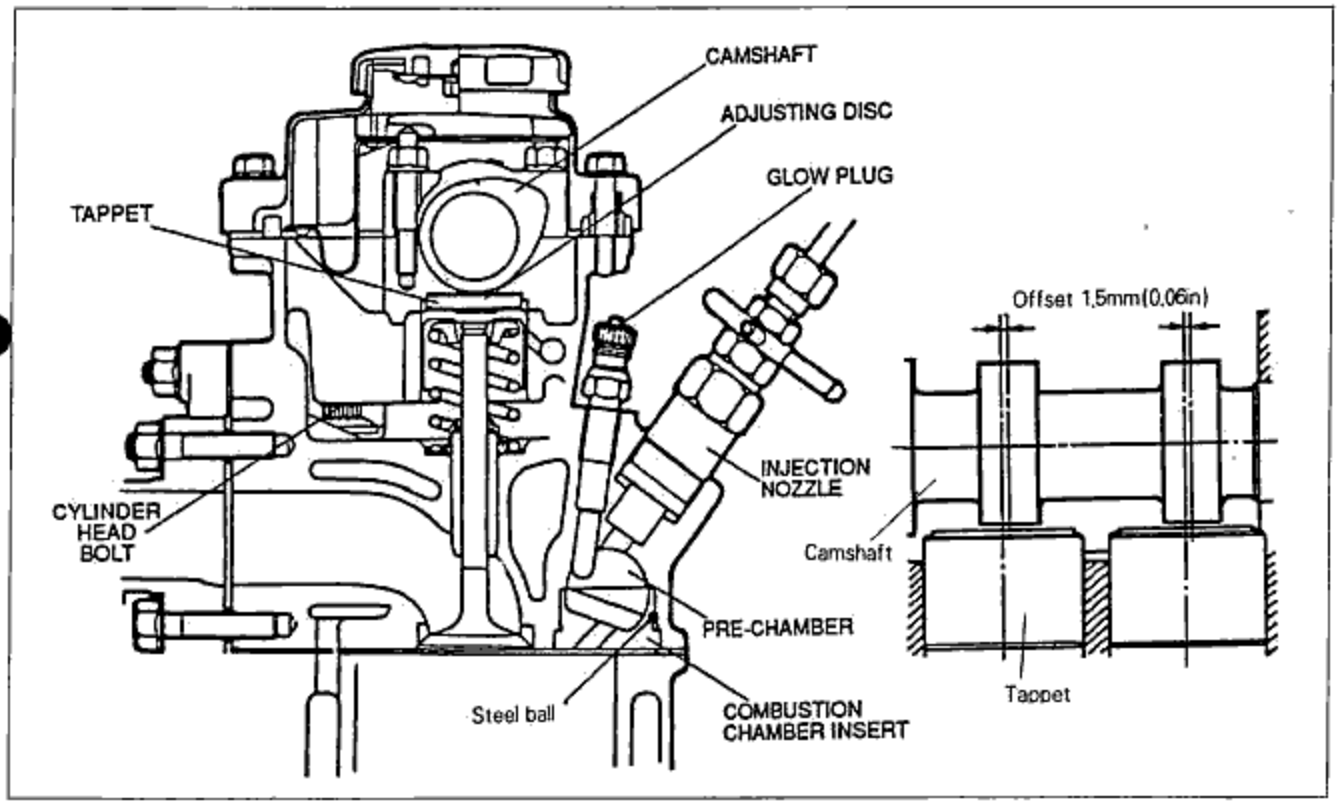

Fig. 1A-2

◈ SLANT BOTTOM SWIRL CHAMBER

By employing the slant bottom swirl chamber having good combustion efficiency, the combustion chamber can maintain high power and low fuel consumption.

◈ CYLINDER HEAD BOLT

The cylinder head bolts are tightened by means of the bolt torque-angle method.
When performing any service procedures related to the cylinder head, special care should be taken. Refer to the main text for detailed information regarding the tightening method.

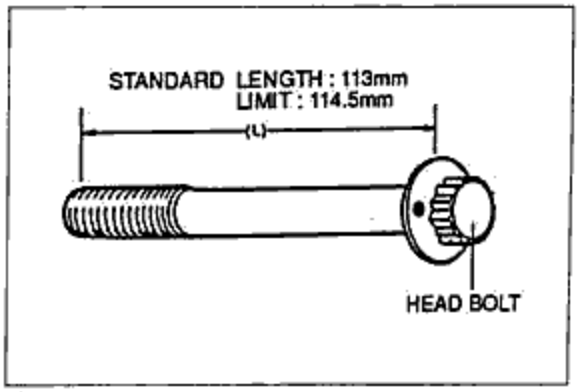

Fig. 1A-3

SPECIFICATIONS

Items \ Engine			MAGMA
Type			Diesel, 4-cycle
Cylinder arrangement and number			In-line, 4 cylinders
Combustion chamber			Swirling flow
Valve system			OHC, belt-drive 8 valves
Displacement cc(cu in)			2,184
Bore and stroke mm(in)			86.0×94.0(3.39×3.70)
Compression ratio			22.9±0.4:1
Compression pressure kPa(kg/cm²,psi)-rpm			2,942(30,426)−200
Valve timing	IN	Open BTDC	10°
		Close ABDC	42°
	EX	Open BBDC	57°
		Close ATDC	11°
Valve clearance mm(in)	IN		0.25(0.0098)
	EX		0.35(0.0138)
Idle speed rpm			700~750
Ignition timing			ATDC 4°
Injection order			1−3−4−2

TROUBLESHOOTING GUIDE

Problem	Possible cause	Correction
Insufficient power	Insufficient compression	
	Improper valve clearance	Adjust
	Compression leakage from valve seat	Repair (grind the valve seat)
	Seized valve stem	Replace
	Weak or broken valve spring	Replace
	Failed cylinder head gasket	Replace
	Cracked or distorted cylinder head	Replace or repair
	Sticking, damaged, or worn piston ring	Replace
	Cracked or worn piston	Replace
	Malfunction of fuel system	Refer to section 4A
	Malfunction of ignition system	Refer to section 5
Excessive oil consumption	Oil working up	
	Worn or sticking piston ring or piston ring groove	Replace
	Worn piston or cylinder	Replace
	Oil working down	
	Bad valve seal	Replace
	Worn valve stem and guide	Replace
	Oil leakage	Refer to section 2A

Problem	Possible cause	Correction
Difficult starting	**Malfunction of engine-related components**	
	Burned valve	Replace
	Worn piston, piston ring, or cylinder	Replace
	Burned cylinder head gasket	Replace
	Malfunction of fuel system	Refer to section 4A
	Malfunction of electrical system	Refer to section 5
Abnormal combustion	**Malfunction of components related to engine**	
	Improper valve clearance	Adjust
	Sticking or burned valve	Replace
	Weak or broken valve spring	Replace
	Carbon accumulation in combustion chamber	Eliminate the carbon
	Malfunction of fuel system	Refer to section 4A
	Malfunction of electrical system	Refer to section 5
Poor idling	**Malfunction of components related to engine**	
	Improper valve clearance	Adjust
	Poor valve to valve seat contact	Repair or replace
	Failure of cylinder head gasket	Replace
	Malfunction of fuel system	Refer to section 4A
	Malfunction of electrical system	Refer to section 5
Engine noise	**Crankshaft or bearing related parts**	
	Excessive main bearing oil clearance	Replace or repair
	Main bearing seized or heat-damaged	Replace
	Excessive crankshaft end play	Replace or repair
	Excessive connecting rod bearing oil clearance	Replace or repair
	Connecting rod bearing seized or heat-damaged	Replace
	Piston related parts	
	Worn cylinder	Replace
	Worn piston or piston pin	Replace
	Seized piston	Replace
	Damaged piston	Replace
	Bent connecting rod	Replace
	Valves related parts	
	Excessive valve clearance	Adjust
	Broken valve spring	Replace
	Excessive clearance between valve stem and guide	Replace
	Insufficient lubrication of rocker arm	Replace
	Others	
	Improper drive-belt tension	Adjust
	Malfunction of water pump bearing	Refer to Section 3A
	Malfunction of alternator bearing	Refer to Section 5
	Exhaust gas leakage	Repair
	Malfunction of timing belt tensioner	Replace

INSPECTION AND ADJUSTMENT

CHECKING OF COMPRESSION PRESSURE

1. Make sure the battery is fully charged.
2. Warm up the engine thoroughly.
3. Remove all the fuel injection pipes, nozzles and washers.
4. Install the compression gauge adapter(49 1456 010) to the injection nozzle hole.
5. Connect a compression gauge to the compression gauge adapter.

Compression pressure:kg/cm²(lb/in²)-rpm
Standard:30(426)−200
Limit:27(384)−200

Caution
While cranking, disconnect the fuel cut solenoid valve connector.

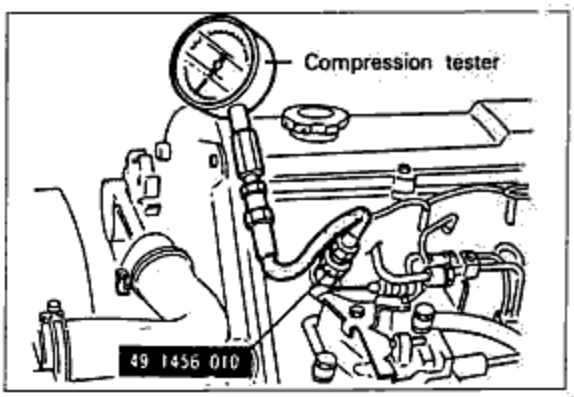

Fig. 1A-4

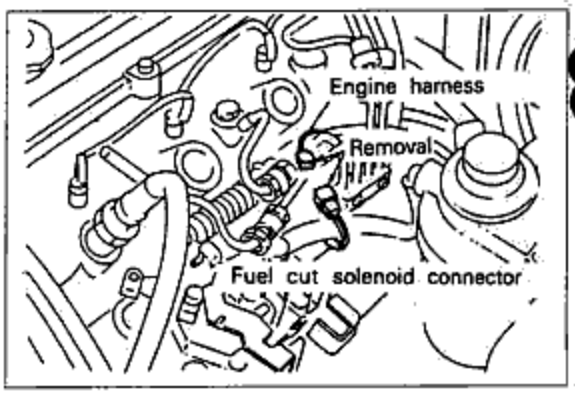

Fig. 1A-5

MEASURE OF THE VALVE CLEARANCE

1. Position No.1 cylinder to the compression top dead center.
2. Measure the valve clearance of No.1 and No.2 of the intake side and No.1 and No.3 of the exhaust side.
3. Turn the crankshaft one turn(forward direction), and then measure the rest of the valve clearance.

Valve clearance;
Engine warm condition
intake:0.30mm(0.012in)
Exhaust:0.40mm(0.016in)
Engine cold condition
Intake:0.20~0.30mm(0.008~0.012in)
Exhaust:0.30~0.40mm(0.012~0.016in)

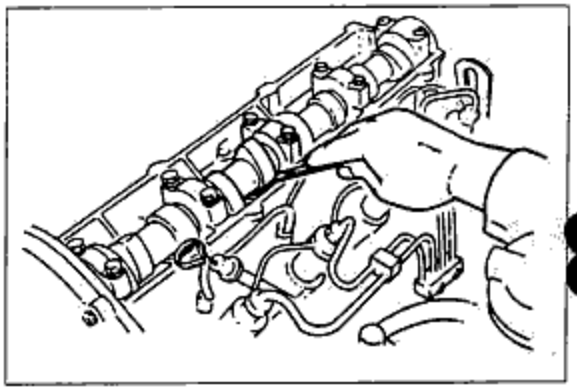
Fig. 1A-6

◈ ADJUSTMENT OF THE VALVE CLEARANCE

Adjust the valve clearances by following the procedures below if they are not within the standard.

1. Face the intake cam straight upward.
2. Move the tappet so that its notch is at the manifold side, so that access to the adjusting disc is easy.
3. Using the tappet holder(49 S120 220), press the tappet down to the position where the adjusting disc becomes accessible.
4. Using a small screw driver or similar tool, take out the adjusting disc.
5. Select an appropriate disc depending on the valve clearance measured. Install it and check the clearance again.

Example(Intake valve):
Thickness of original adjusting disc+(measured clearance−standard clearance)=thickness of new adjusting disc.
4.00+(0.30−0.25)=4.05mm
0.157+(0.012−0.010)=0.159in

Note

The number marked on the disc indicates its thickness.
Example:3825 means 3.825mm(0.1506in).
Adjusting discs are available in 37 different thickness within the 3.400~3.650mm(0.134~0.144in), 4.350~4.600mm(0.171~0.181in) range, at intervals of 0.050mm(0.002in) and 3.700~4.275mm (0.146~0.169in) range, at intervals of 0.25mm(0.00984in).

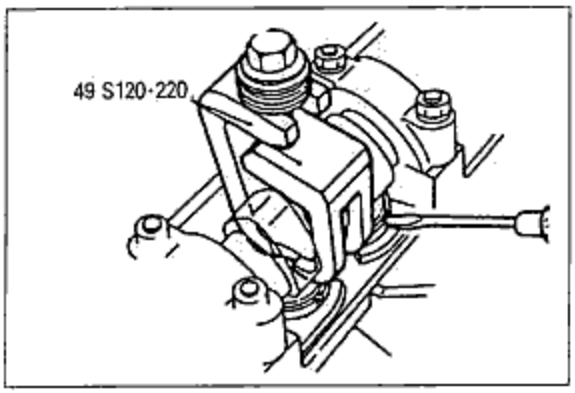

Fig. 1A-7

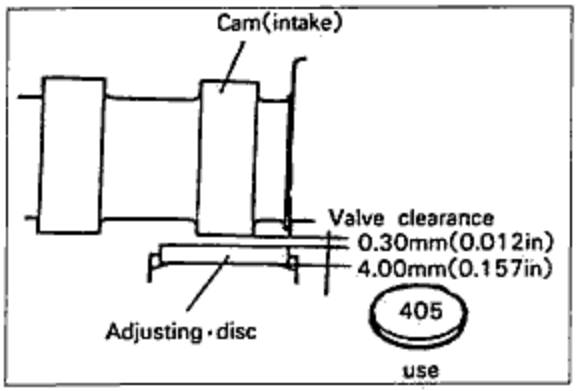

Fig. 1A-8

⊠ DISASSEMBLY OF ENGINE

After disassembling the transmission from the engine and transmission complete, put the engine on the engine hanger and remove each part in the numbered order shown in the figure.

◈ PARTS RELATED TO ENGINE AUXILIARY

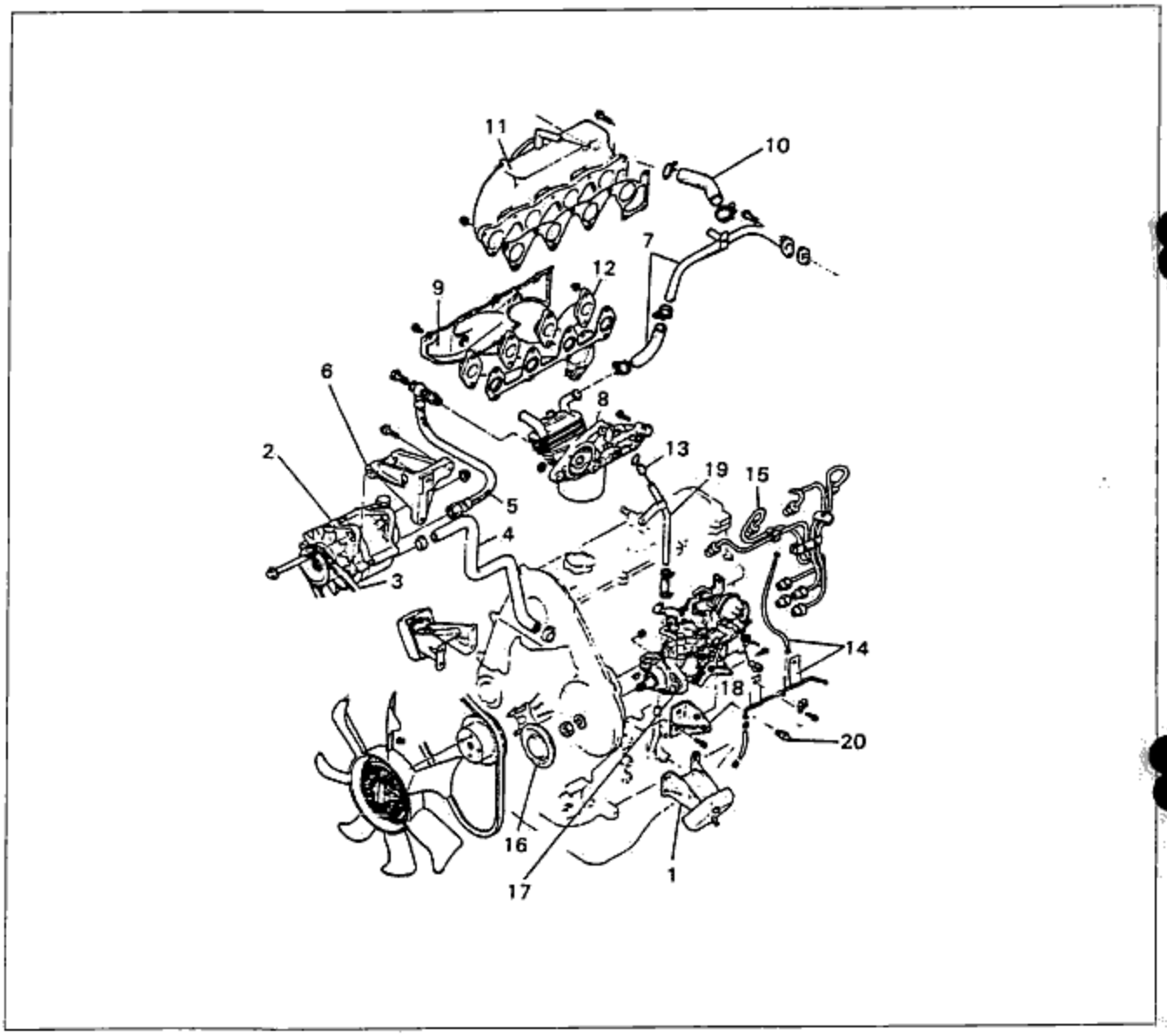

Fig. 1A-9

1. Engine mounting bracket
2. Alternator and vacuum pump Ass'y
3. Fan belt
4. Oil hose(Vacuum pump~oil pan)
5. Oil hose(Vacuum pump~oil filter)
6. Alternator bracket
7. Water by-pass pipe(for oil cooler)
8. Oil filter, oil cooler and bracket
9. Heat insulator
10. Blow-by hose
11. Intake manifold
12. Exhaust manifold
13. Oil level gauge
14. Fuel leak pipe and hose Ass'y
15. Injection pipe Ass'y
16. Injection pump pulley cover
17. Injection pump complete
18. Injection pump stay
19. Oil level gauge guide pipe
20. Oil pressure switch

◈ PARTS RELATED TO TIMING MECHANISM

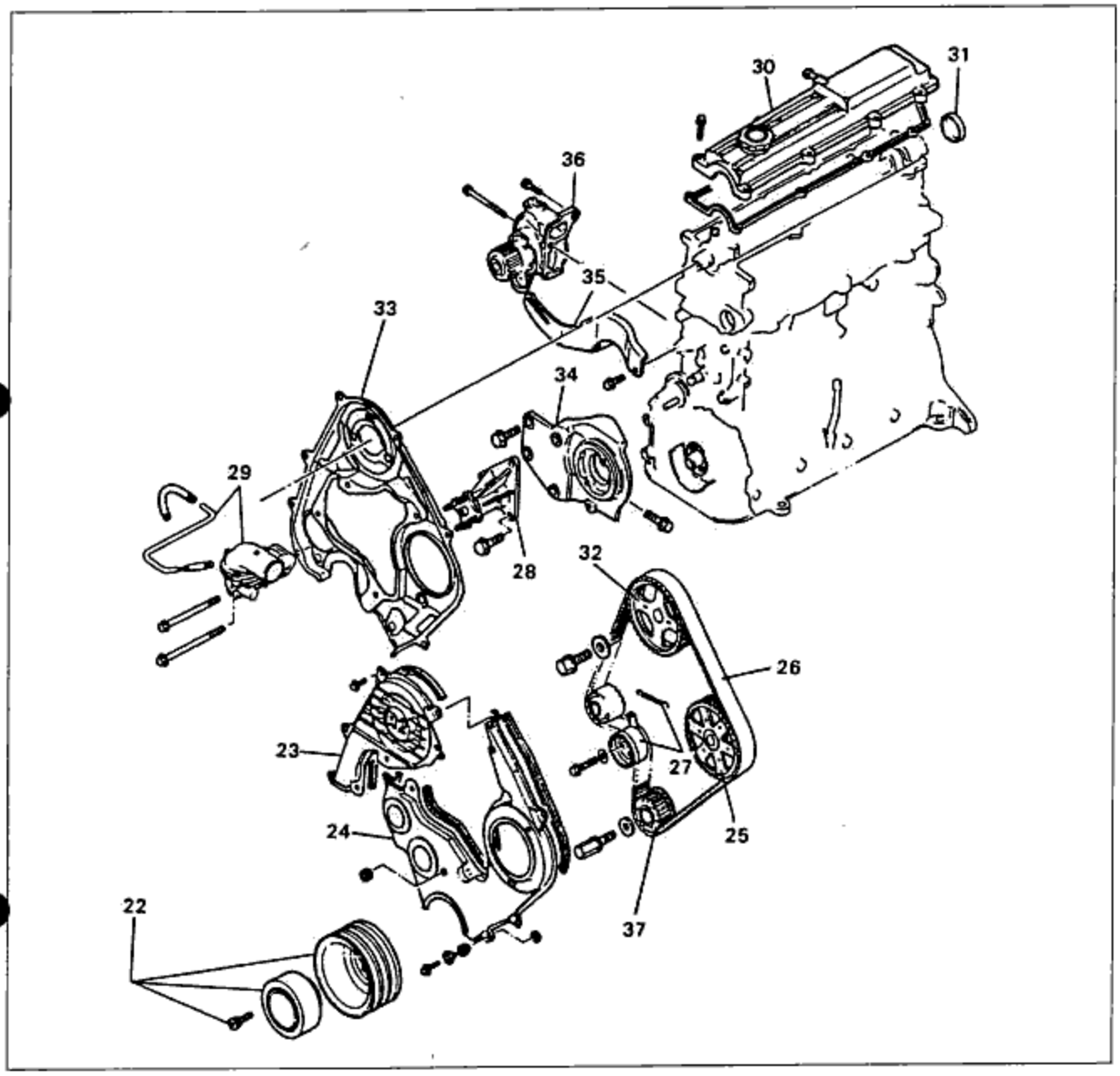

Fig. 1A-10

22. Crankshaft pulley and damper
23. Timing belt cover, right and seal rubber
24. Timing belt cover, left and seal rubber
25. Injection pump pulley and key
26. Timing belt
27. Tensioner spring and tensioner
28. Cooling fan pulley bearing complete
29. Thermostat and casing Ass'y and by-pass hose
30. Cylinder head cover
31. Seal cap
32. Camshaft pulley and key
33. Seal plate
34. Injection pump bracket
35. Alternator strap
36. Water pump complete
37. Timing belt crank pulley and woodruff key

◆ PARTS RELATED TO CYLINDER HEAD

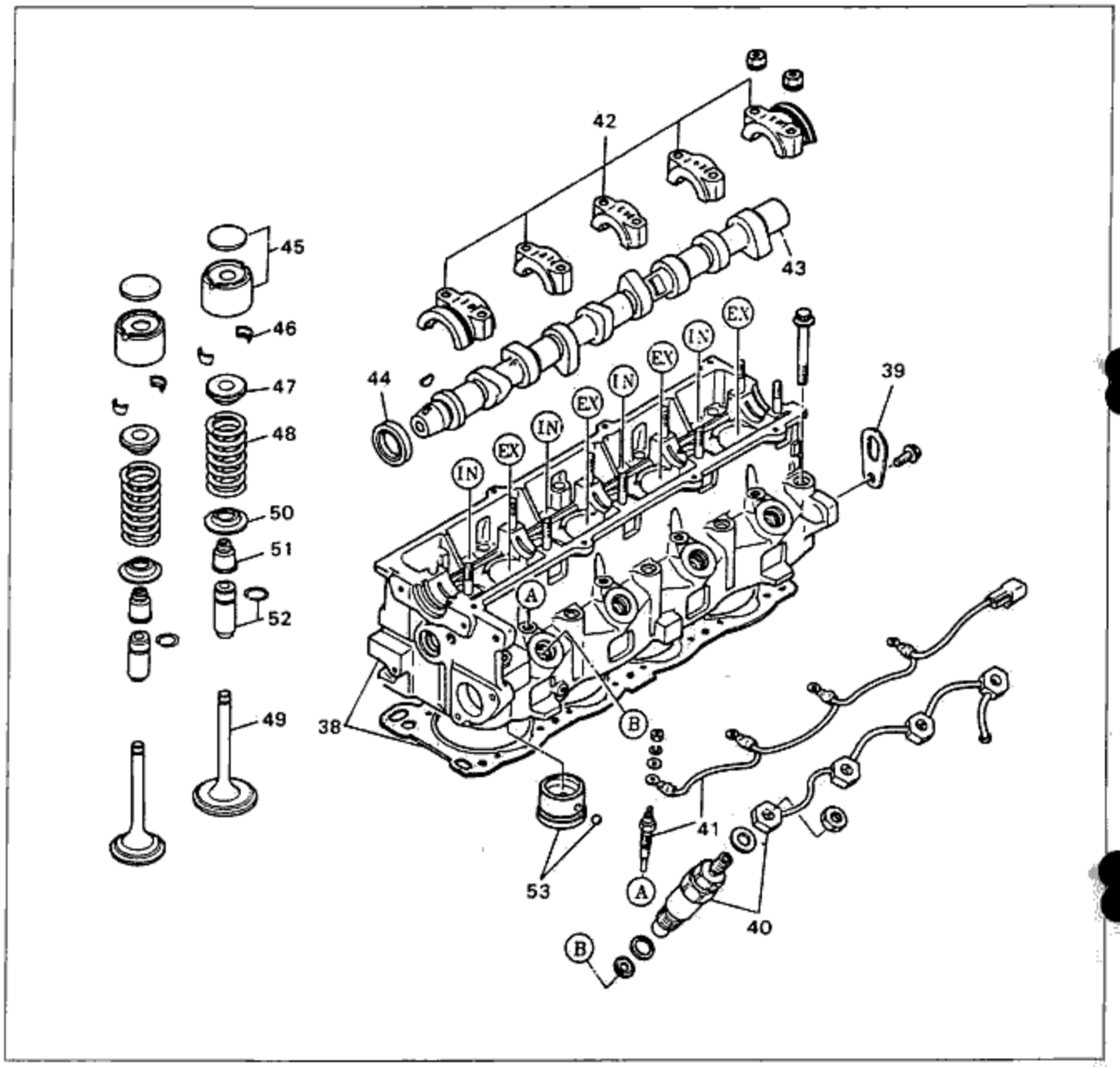

Fig. 1A-11

38. Cylinder head complete and gasket
39. Engine hanger
40. Injection pipe and nozzle
41. Glow-plug and cable
42. Camshaft cap
43. Camshaft
44. Oil seal
45. Tappet and adjusting disc
46. Valve cotter
47. Valve spring seat, upper
48. Valve spring
49. Valve
50. Valve spring seat, lower
51. Valve seal
52. Valve guide and clip
53. Combustion chamber, inside

◈ PARTS RELATED TO LUBRICATION SYSTEM AND FLYWHEEL

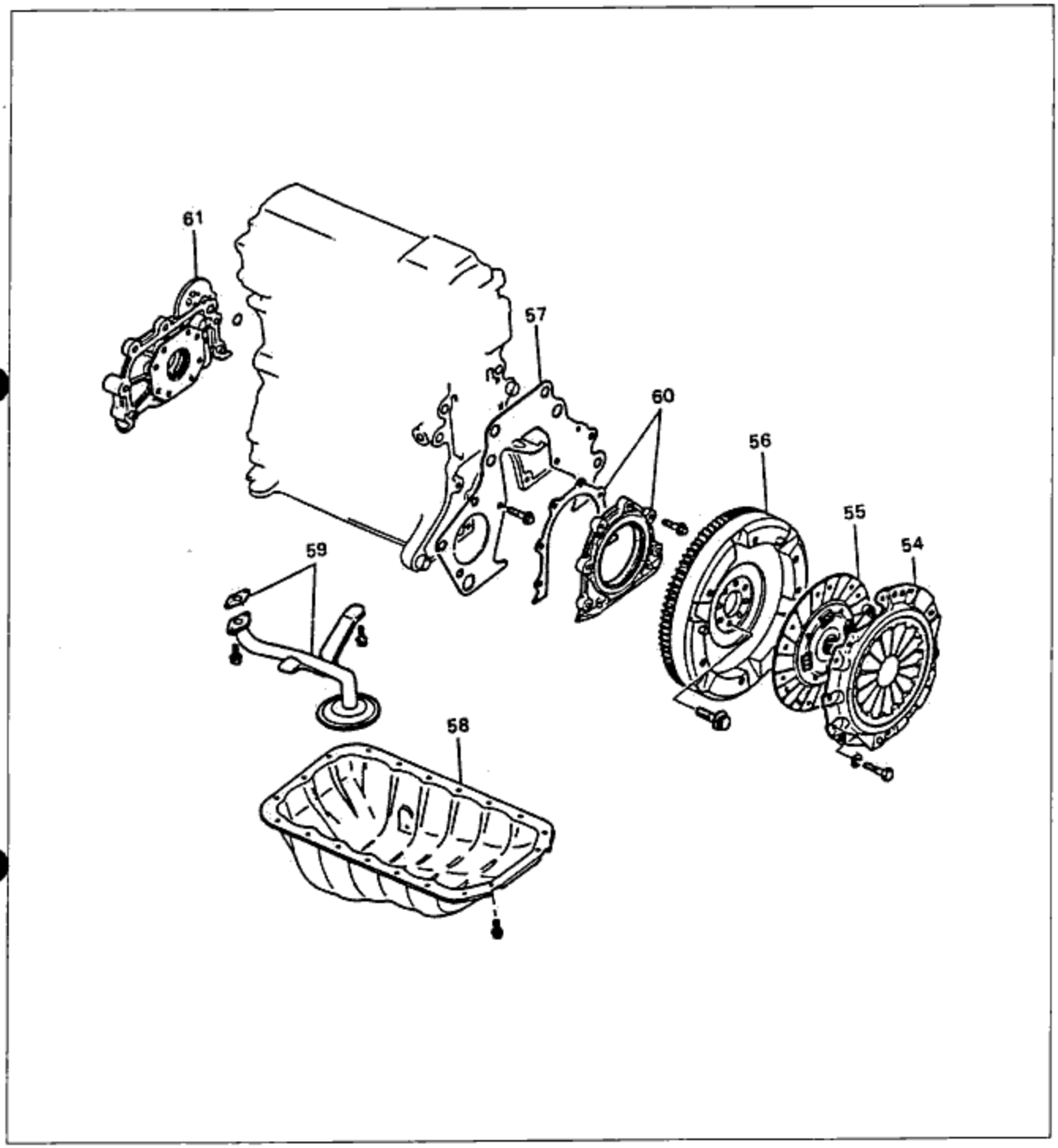

Fig. 1A-12

54. Clutch cover Ass'y
55. Clutch disc
56. Flywheel Ass'y
57. End plate
58. Oil Pan
59. Oil strainer and gasket
60. Rear cover Ass'y and gasket
61. Oil pump body Ass'y

◈ PARTS RELATED TO CRANKSHAFT AND PISTON ASSEMBLY

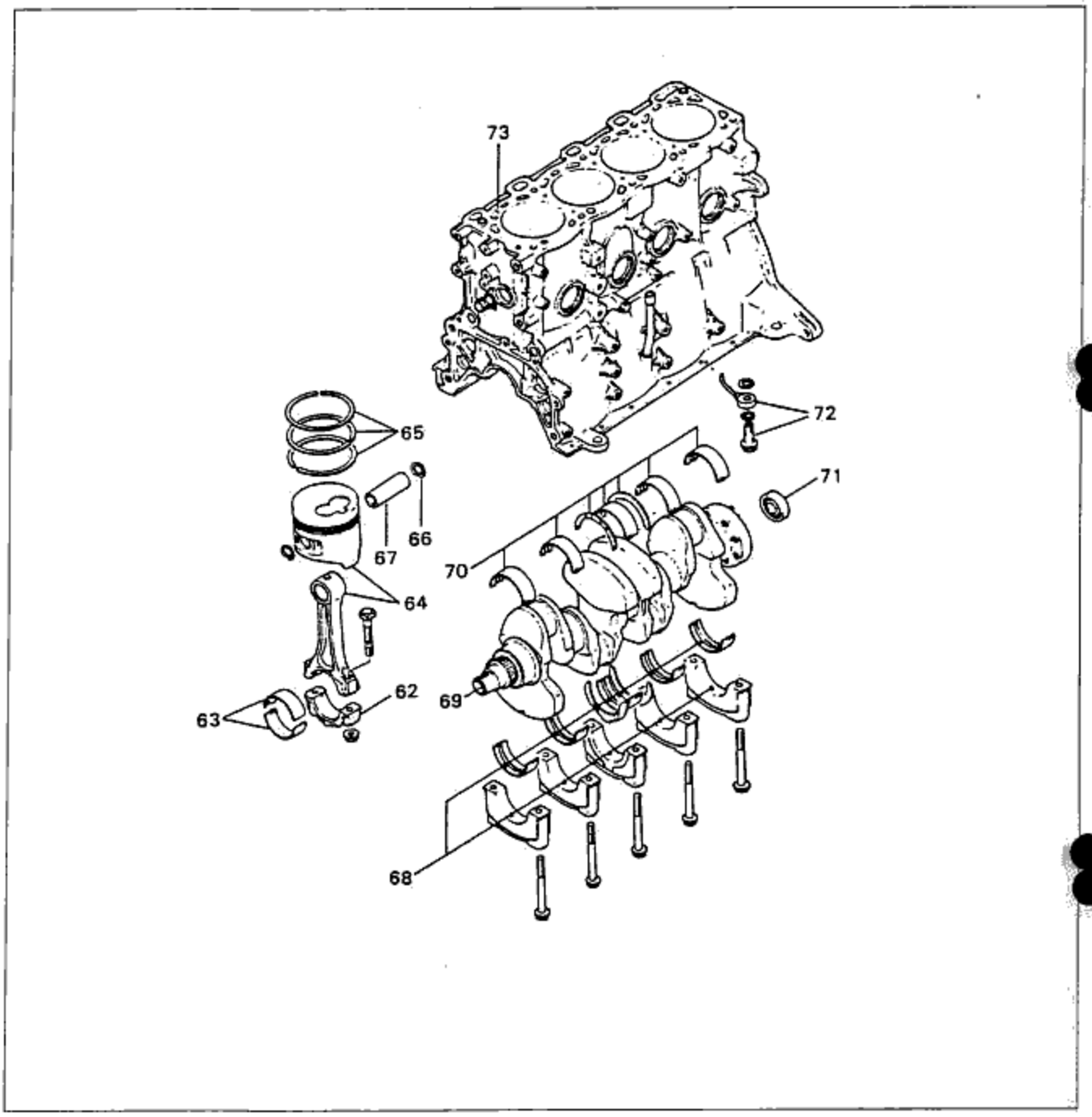

Fig. 1A-13

62. Connecting rod bearing cap
63. Connecting rod bearing
64. Connecting rod and piston
65. Piston ring
66. Snap ring
67. Piston pin
68. Main bearing cap, main bearing and thrust bearing
69. Crankshaft
70. Main bearing and thrust bearing(cylinder block side)
71. Pilot bearing
72. Oil jet and oil jet valve
73. Cylinder block Ass'y

NOTES ABOUT DISASSEMBLY

(1) Inspect each part individually during disassembly for the way it was assembled, and for deformation, wear, and damage.

(2) Mark or otherwise indicate parts which are similar(pistons, piston rings, connecting rods, valve springs, etc.) so that they can be reinstalled in the cylinder they were removed from.

(3) Be sure all disassembled parts are placed so that they are in order and for the correct cylinder.

(4) After steam cleaning the parts, use compressed air to blow off any remaining water(especially from pilot bearing).

◈ DISASSEMBLY PROCEDURES

ENGINE HANGER

1. After separating all connections, install the engine onto the engine hanger(49 G030 005) attached to the engine stand(49 0107 680A).
2. Drain the engine oil.

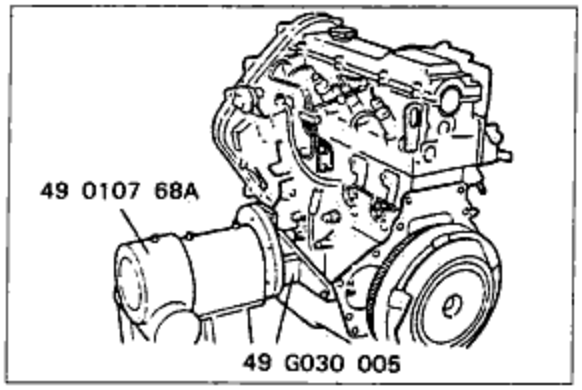

Fig. 1A-14

INJECTION PUMP PULLEY

1. Make a matching mark on the injection pump body and pump bracket.
2. After tentatively tightening the pulley and the pump bracket not to rotate by using suitable bolt as shown in the figure, loosen the lock nut.
3. After loosening the pump body tightening nut, and then disassemble the pulley by using pulley puller(49 S120 215)
4. Make a matching mark on the pump and bracket.

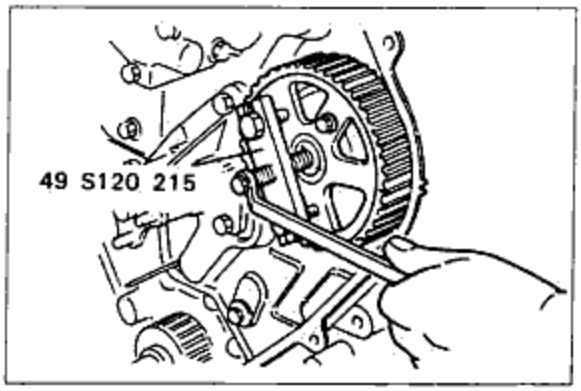

Fig. 1A-15

TIMING BELT

1. Disassemble the timing belt as shown in the figure 1A – 10.

Cautions:

Inspect the timing belt as shown in the figure 1A – 63. In case of no problem, express the recognizing mark of the direction of correct rotation on the belt by chalk. That is in order to prevent from wrongly assembling in case of reusing it.

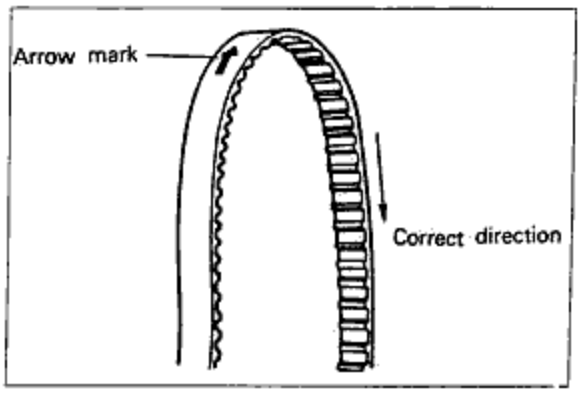

Fig. 1A-16

CAMSHAFT PULLEY

1. As shown in the figure, hold the camshaft with the wrench(29mm, 1.14 in) to prevent camshaft from turning and loosen the camshaft pulley lock bolt.

Cautions:

- **Before removing the camshaft pulley, turn the crankshaft 45° clockwise, to prevent damage to the valve.**
- **Don't damage the cylinder head edge with the wrench.**

2. Separate the camshaft and pulley from the camshaft, using the pulley puller(49 S120 215A).

Caution:

- **Do not hit the camshaft pulley with a hammer.**

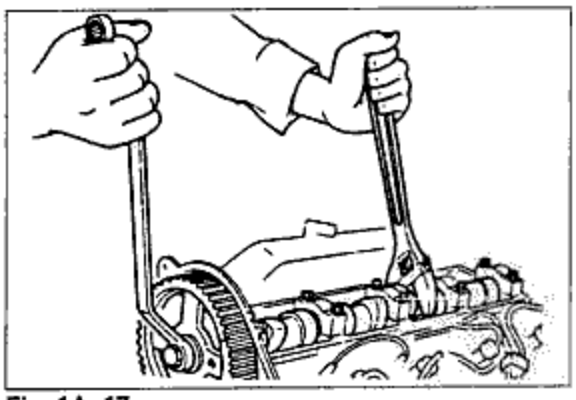

Fig. 1A-17

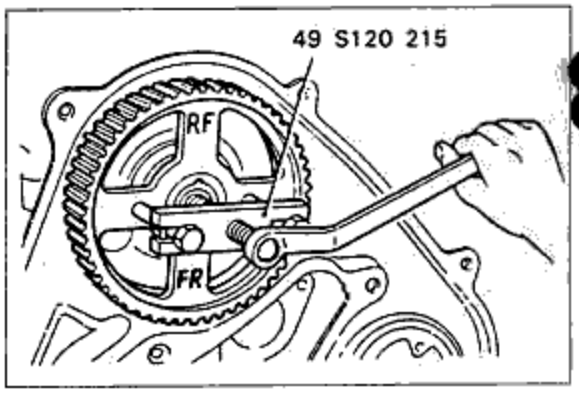

Fig. 1A-18

CRANKSHAFT PULLEY AND TIMING BELT CRANK PULLEY

1. After setting the ring gear brake(49 V101 060) into the flywheel assembly and preventing the pulley from turning, and then disassemble the pulley.

Cautions:

- **Using the pulley puller(49 S120 215A), remove the timing belt crank pulley.**
- **Don't hit and twist.**

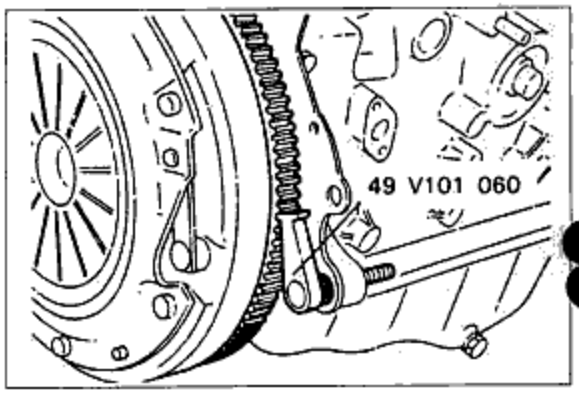

Fig. 1A-19

CYLINDER HEAD COMPLETE

Loosen the cylinder head (retaining) bolts in the numbered order shown in the figure. Loosen them each a little at a time, in the order.

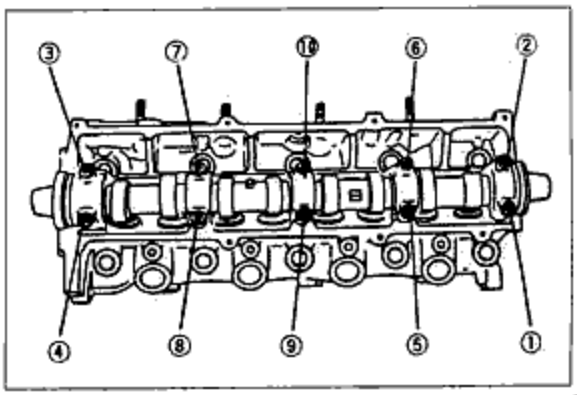

Fig. 1A-20

CAMSHAFT CAP

Loosen the camshaft cap nut in the numbered order shown in the figure.
Loosen them each a little at a time, in the order.

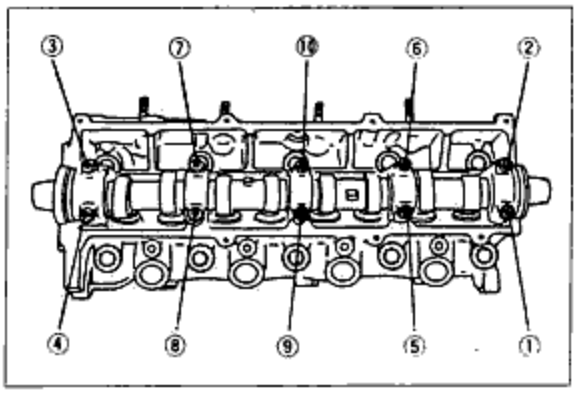

Fig. 1A-21

VALVE

Remove the valve cotter, valve seat (upper & lower), valve spring and valve from the cylinder head by using the valve spring lifter and pivot(49 0336 100A & 40 S120 222)

Caution:

When disassembling the valve sets, set the tappet and adjusting disc and then arrange according to the order of being assembled.

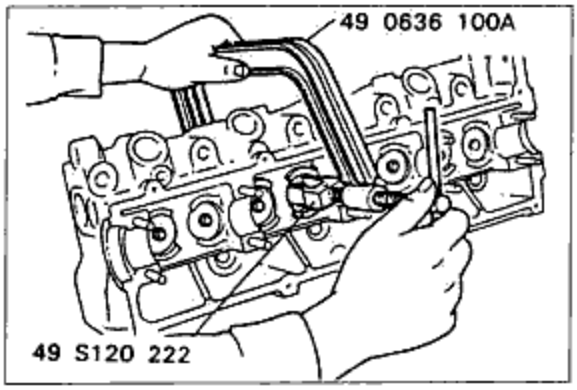

Fig. 1A-22

VALVE SEAL

After removing the lower valve seat, remove the valve seal by using the valve seal remover(49 S120 170).

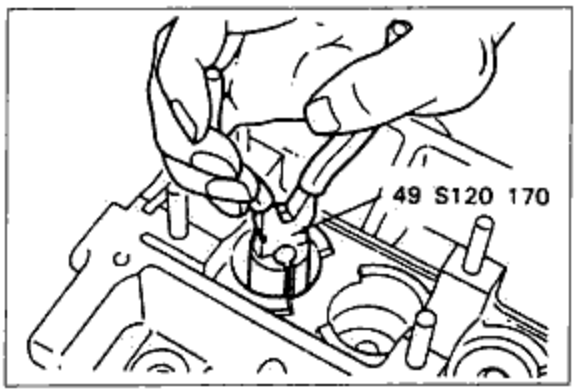

Fig. 1A-23

COMBUSTION CHAMBER INSERT

Bring the suitable round pole into contact with glow plug hole and remove by striking as shown in the figure.

Caution:

When removing the combustion chamber insert, pay attention not to lose the steel ball.

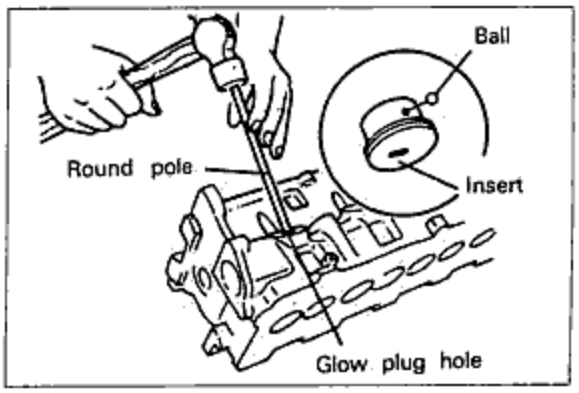

Fig. 1A-24

CRANKSHAFT

Before removing the main bearing cap and crankshaft, measure the end play of crankshaft and record the measured values. Later, when installing, refer to the selection of the thrust bearing.

Standard end play:

0.04~0.282mm(0.0016~0.0111in)

End play limit:0.3mm(0.0118in)

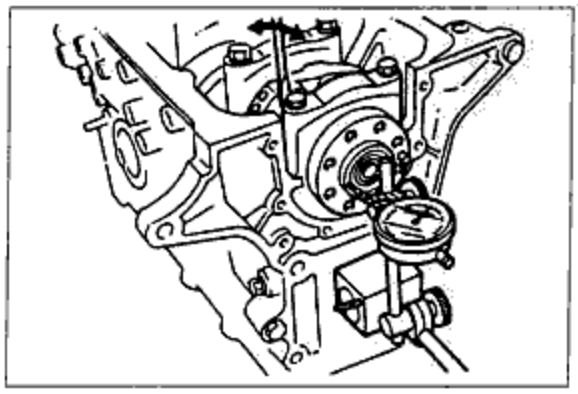

Fig. 1A-25

PILOT BEARING

Using the needle bearing puller(49 1285 071), remove the pilot bearing from the crankshaft end.

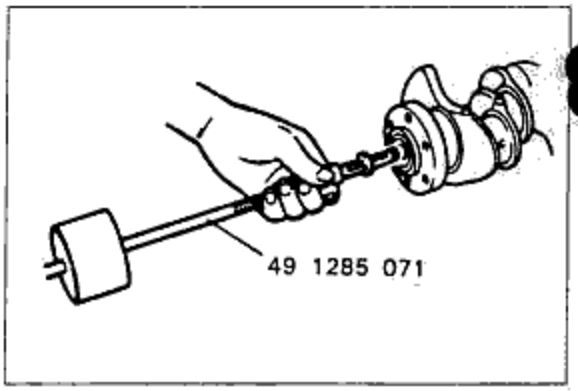

Fig. 1A-26

INSPECTION AND REPAIR

MAINTENANCE NOTES

1. Before inspection, clean each part, and take care to remove any gasket fragment, dirt, oil or grease, carbon, moisture residue, or other foreign materials.
2. Be careful not to damage the joints or sliding parts of aluminum alloy components such as cylinder head, pistons.
3. Inspection and repair must be done in the order specified.

CYLINDER HEAD COMPLETE

1. Inspection and repair of cylinder head
   (1) Inspect for water leakage, fuel leakage, damage, and cracks. If any problem is found, replace the part.
   (2) Measure cylinder head for distortion in the six directions shown in the figure.
   Distortion limit:0.15mm(0.006in)

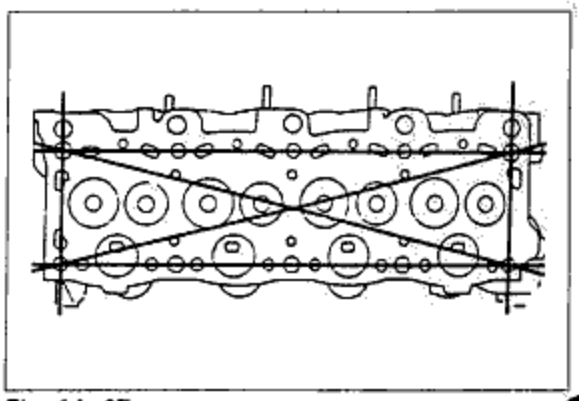

Fig. 1A-27

(3) If cylinder head distortion exceeds the limit, replace the cylinder head.

Cautions:

Do not attempt to repair a cylinder head by milling or grinding.
Handle the cylinder head carefully, taking special care not to damage its lower surface.

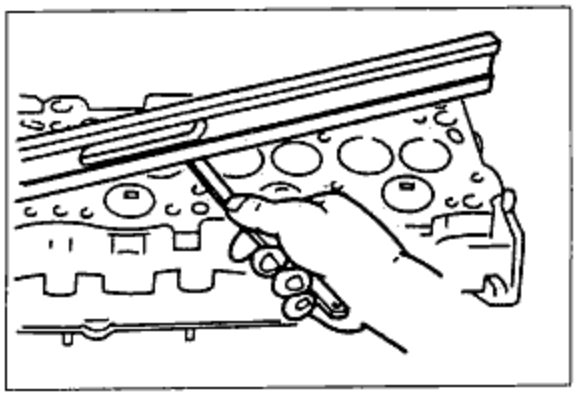

Fig. 1A-28

(4) Measure the distortion of manifold contacting surface.
If the distortion exceeds the limit, grind the surface, or replace the cylinder head.

Distortion limit: 0.20mm(0.008in)

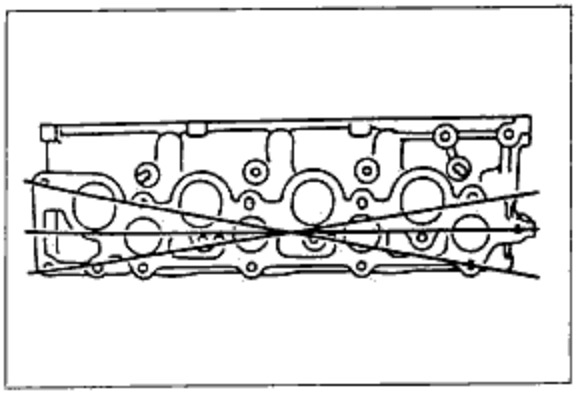

Fig. 1A-29

(5) Measure the oil clearance of camshaft.
(a) Remove the tappet and adjusting disc from the cylinder head, and separate them by cylinder.
(b) Clean away oil or dirt from the camshaft or cylinder head journal.
(c) Set a plastigauge on the camshaft journal(in the axial direction of the journal.)
(d) Set the camshaft cap, and tighten to the specified torque.

Camshaft cap tightening torque: 2.0~2.7m·kg(15~20 ft·lb)

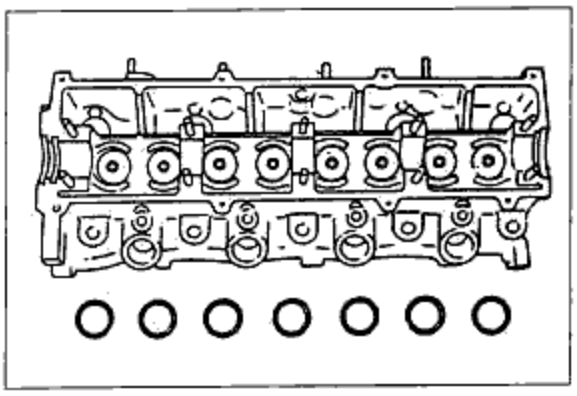

Fig. 1A-30

Cautions:

When installing the camshaft cap, note the correct order and arrow marks.
When tightening the camshaft cap nut, do so evenly and in the order shown in the engine assembly section.

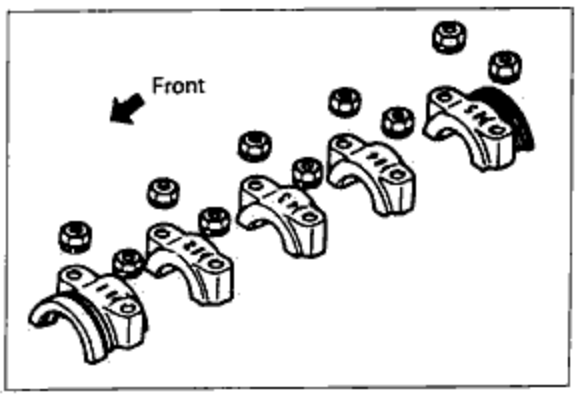

Fig. 1A-31

(e) Remove the camshaft cap and measure the oil clearance.
Standard oil clearance:
0.025~0.066mm(0.0098~0.0260in)
Limit:0.1mm(0.004in)

(f) If the oil clearance exceeds the limit, replace the cylinder head or camshaft with a new one.

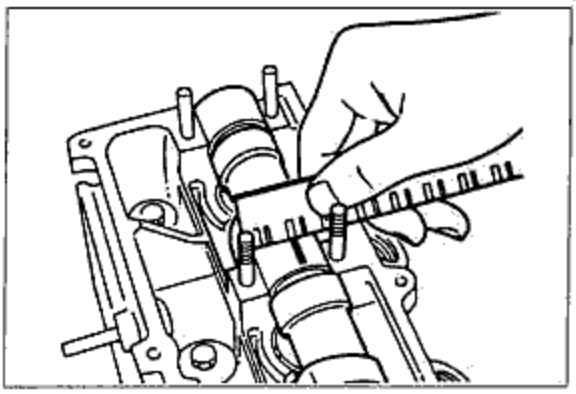

Fig. 1A-32

(6) Measure the end play of the camshaft.
If the end play exceeds the limit, replace the camshaft or the cylinder head.
Standard camshaft end play:
0.02~0.15mm(0.008~0.006in)
Limit:0.2mm(0.008in)

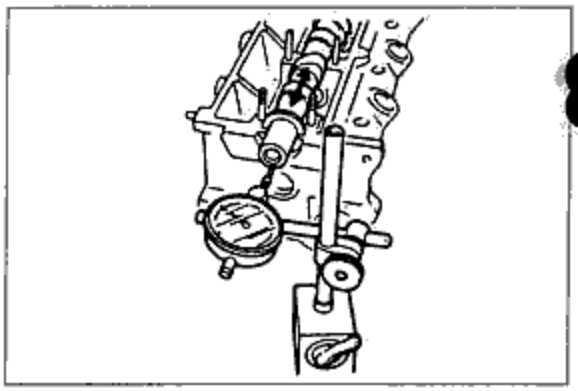

Fig. 1A-33

(7) Measure the amount that the combustion chamber insert has receded.
(a) Clean the lower side so that the surface of the combustion chamber insert won't be scarred.
(b) Measure by using a dial gauge.
Limits:
Receded amount:0.04mm(0.0016in)
Projection amount:0.05mm(0.0024in)
(c) If either limit is exceeded, replace the insert or the cylinder head.

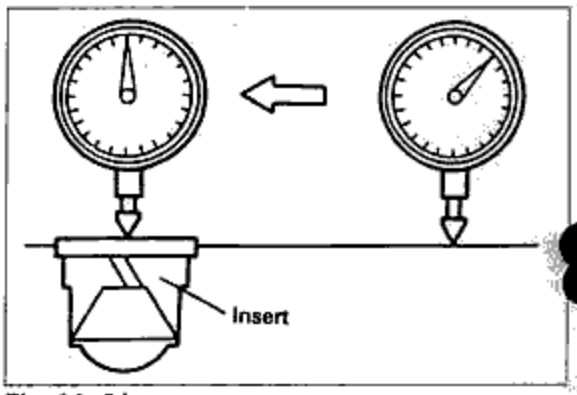

Fig. 1A-34

2. Check and repair of valve seats
(1) Use a thickness gauge, as shown in the figure, to measure the receded amount from the cylinder head surface.
If the receded amount is 1.55~2.55mm(0.061~0.100in), use an equivalent washer at the valve spring seat. If the receded amount is 2.55mm (0.100 in) or more, replace the cylinder head.
Standard amount of valve recession:Intake and exhaust:
0.75~1.05mm(0.030~0.041in)

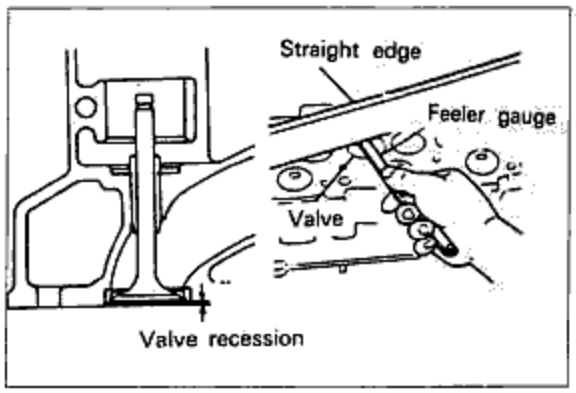

Fig. 1A-35

(2) Check the surface which contacts the valve face for roughness or damage. If necessary, use a valve seat cutter or valve seat grinder to repair to the specified shape.

NOTE

a) To check the contact width, apply a thin coating of red lead to the valve seat, and press the valve against the valve seat, be sure not to turn the valve when doing so.

b) When grinding the valve seat, use a 15°, 45° or 60° valve seat cutter or valve seat grinder to grind away the roughness or scars(to the minimum limit) of the seat surface, always checking the contact width and contact position while grinding.

Standard valve seat contact width:
1.7~2.3mm(0.067~0.09in)

(3) Seat the valve.

To seat the valve, apply a thin coating of engine oil mixed with small amount of compound to the seat surface, and then lightly tap while turning the valve.

Cautions:

a) When seating the valve, be careful not to let compound adhere to the valve stem.

b) The valve contact position in relation to the valve seat must be at the center of the circumference, and the contact width must be the standard value.

c) Check to be sure that the amount of valve recession is within the specification.

3. Inspection and repair of valve guides

Measure the difference between the inner diameter of each valve guide and the diameter of the corresponding stem. Replace the valve guide if the gap exceeds the limit.

Gap limit: 0.10mm(0.004in)

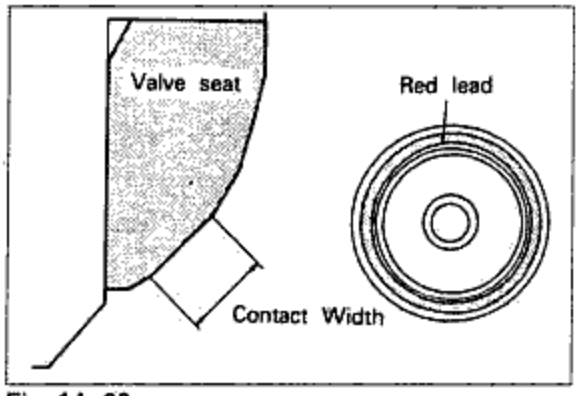

Fig. 1A-36

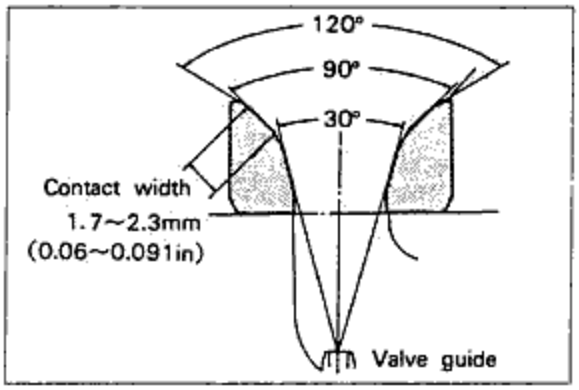

Fig. 1A-37

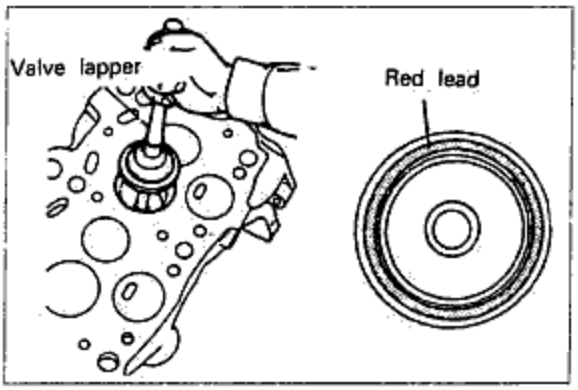

Fig. 1A-38

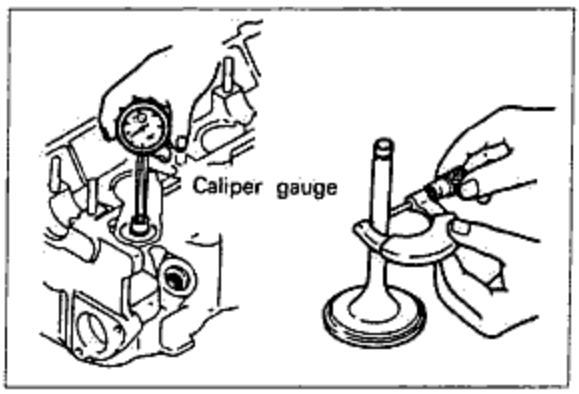

Fig. 1A-39

4. Replacement of valve guide

(1) Removal

Tap the valve guide from the side opposite the combustion chamber using the valve guide remover (49 0636 165A).

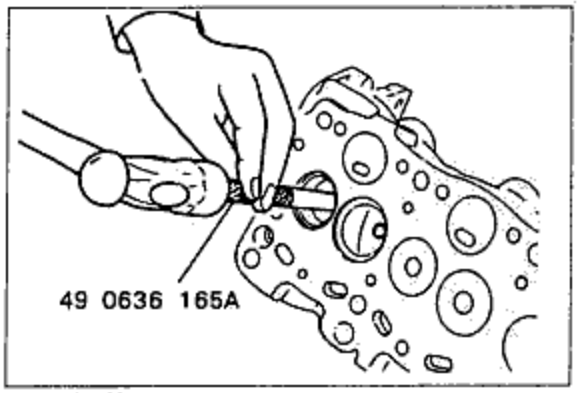

Fig. 1A-40

(2) Installation

Fit the clip onto the valve guide. Use the valve guide installer (49 0552 165) to tap the vlave guide in from the side opposite the combustion chamber until the clip barely contacts the cylinder head.

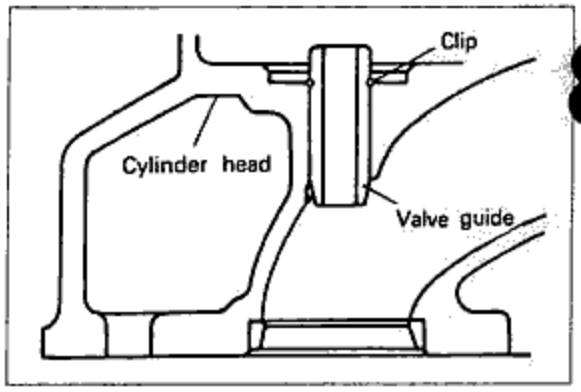

Fig. 1A-41

Cautions:

- When the valve guide is replaced, check the gap between the valve and valve guide once again.
- The valve seal should be installed after inspection and repair of the valve seat.
- Don't disassemble the valve guides because intake and exhaust valve guides have a different seat.
  Intake valve guide ····· longer
  Exhaust valve guide ····· shorter

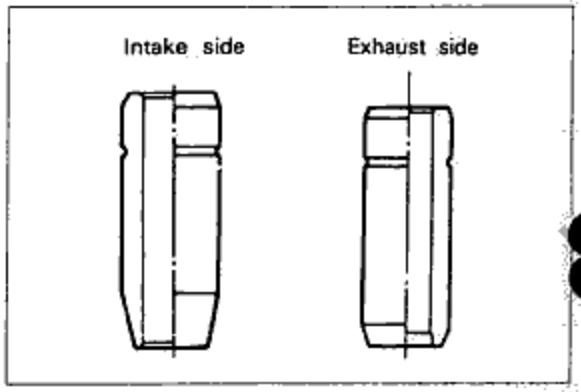

Fig. 1A-42

5. Inspection and repair of valves

(1) Inspect each valve and replace when showing valve stem wear, damage, bending, or dents.

(2) Inspect each valve for roughness or damage on its faces. If the problem is slight, repair the valve with valve refacer.

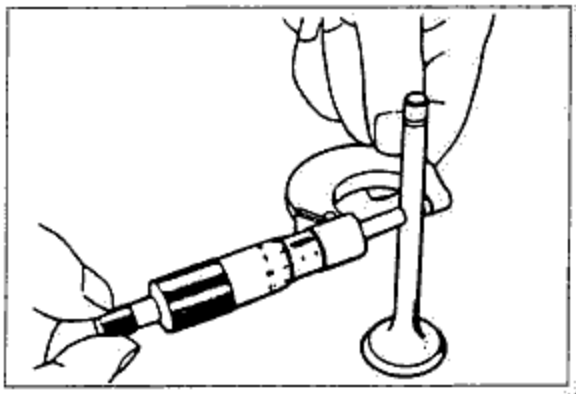

Fig. 1A-43

6. Inspection of valve spring
   (1) Inspect each valve spring for cracks or other damage. Replace it if necessary.
   (2) Check each spring for free length and angle limit. Replace it if necessary.
   Free length limit: 44.8mm (1.764in)

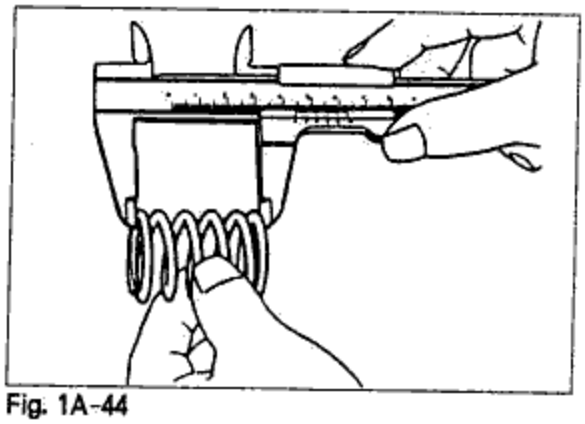

Fig. 1A-44

Angle limit: 1.58mm (0.062in)

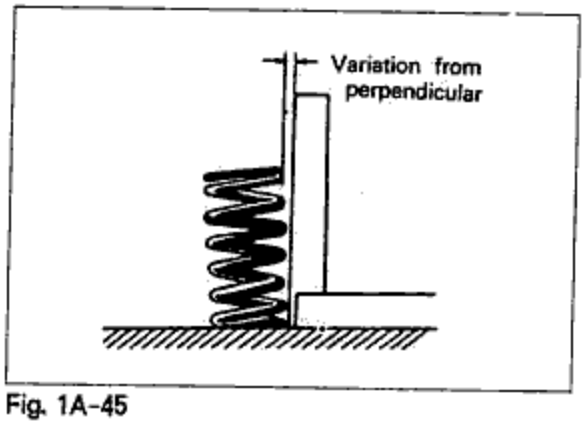

Fig. 1A-45

7. Checking the tappet and adjusting disc
   (1) Measure the outer diameter of the tappet, replace it if the limit is exceeded.
   (2) Measure the inner diameter of the tappet hole in the cylinder head, calculate the difference (clearance) between the inner diameter and the outer diameter of the tappet; if this clearance is the limit value or more, replace the tappet or the cylinder head.
   Standard tappet outer diameter:
   34.96~34.98mm (1.3763~1.3771in)
   Standard tappet hole:
   34.99~35.02mm (1.3776~1.3787in)
   Standard clearance:
   0.015~0.056mm (0.006~0.0256in)
   Clearance limit: 0.10mm (0.0040in)

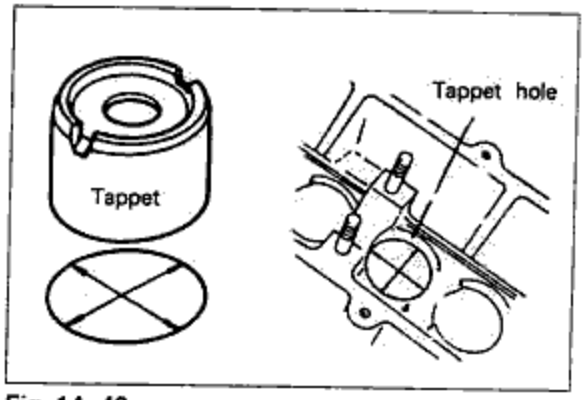

Fig. 1A-46

CAMSHAFT

1. Check the camshaft for wear or damage. Replace it if necessary.
   Standard cam height:
   Intake: 44.306mm (1.744in)
   Exhaust: 45.30mm (1.783in)
   Cam height limit:
   Intake: 44.100mm (1.736in)
   Exhaust: 45.100mm (1.776in)
   Cam lift amount
   Intake: 8.306 (0.327in)
   Exhaust: 9.300mm (0.366in)

2. Check the camshaft deflection, replace it if the deflection exceeds the limit.
   Camshaft deflection limit:
   0.10mm (0.0040in)
   Camshaft deflection standard:
   0.015mm (0.006in)

NOTE
Install the front and rear journals on a V-block to measure them.

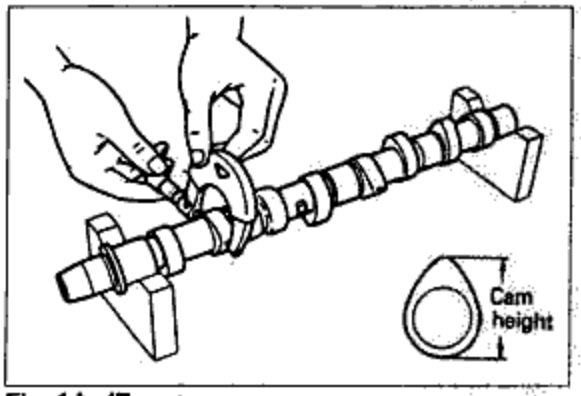

Fig. 1A-47

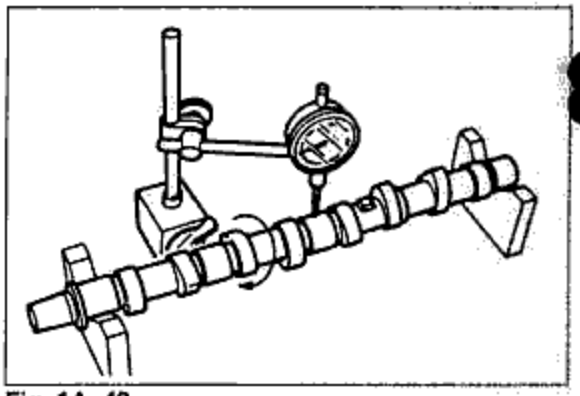
Fig. 1A-48

CYLINDER BLOCK

1. Cylinder block inspection and repair
   (1) Check each cylinder for dampness, damage, and crack. Replace it if necessary.
   (2) Measure the distortion (degree of flatness) of the top surface of the cylinder block in the six directions shown in the figure.
   Distortion limit: 0.15mm (0.006in)
   (3) If the distortion exceeds the limit, replace the cylinder block.

Caution:
Don't grind the surface of the cylinder block.
If grinded, the valves will hit the pistons.

   (4) Check the cylinder wall for scoring or signs of seizure. If any problem exists, reboring or replacement is necessary.
   (5) If the upper part of the cylinder wall shows uneven wear, use a ridge reamer to repair.

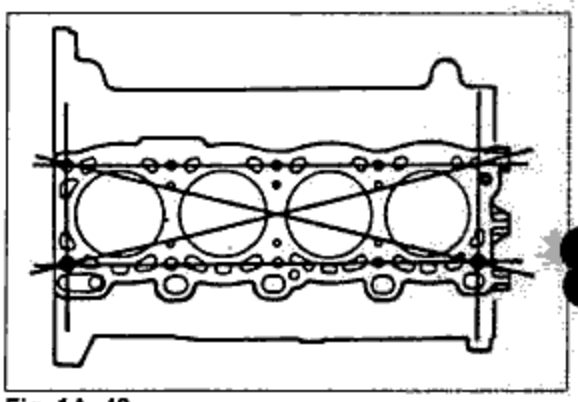
Fig. 1A-49

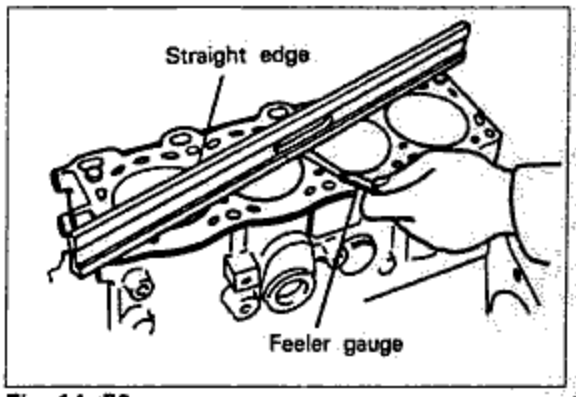

Fig. 1A-50

(6) Measure the cylinder diameter at the six place shown in the figure. Check the amount of wear. The amount of wear is the difference between the maximum and minimum diameters. If the amount of wear exceeds the limit, the cylinder should be rebored.
Standard cylinder bore: 86.00mm(3.39in)
Cylinder bore wear limit: 85.85mm(3.38in)
Difference between cylinder bores: 0.022mm (0.0009in)

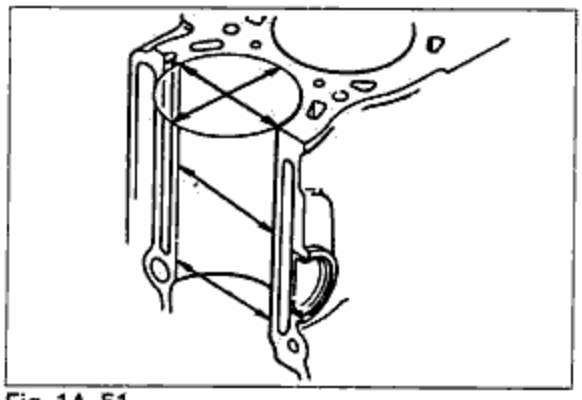

Fig. 1A-51

Caution:
The boring size should be based on the size of an oversize piston.

Oversize pistons: 0.50mm(0.020in)
1.00mm(0.039in)

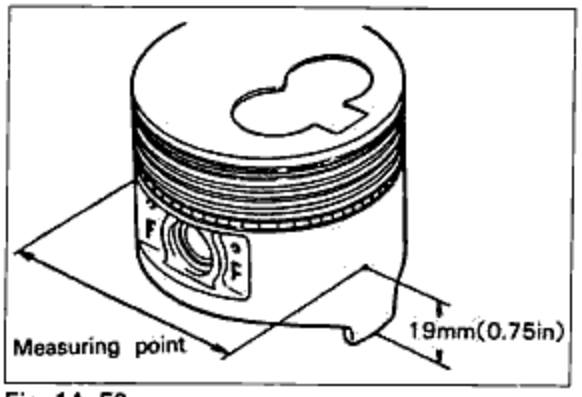

Fig. 1A-52

◆ PISTONS AND PISTON RINGS

1. Inspect the piston outer circumferences of all pistons for seizure or scoring. Replace if necessary.
2. Measure the outer diameter of each piston, and be sure the clearance between the piston and cylinder is correct.
   Piston standard outer diameter:
   85.95~85.98mm(3.384~3.385in)
   Piston and cylinder clearance limit:
   0.15mm(0.006in)

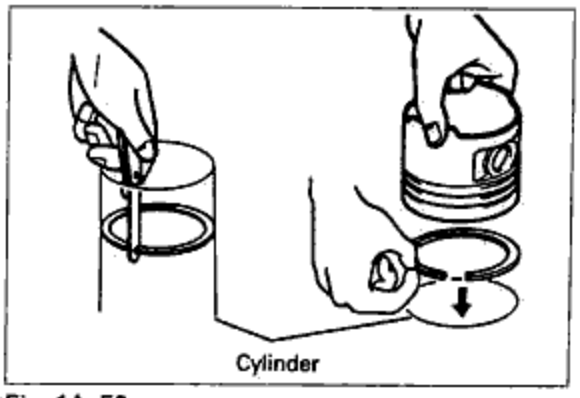

Fig. 1A-53

Cautions:
- **Measure the piston outer diameter in the thrust direction, 19mm(0.75in) above the bottom of piston.**
- **If the piston is replaced, replace the piston ring also.**

Oversize piston rings:
0.50mm(0.020in)
1.00mm(0.039in)

3. Inspect the piston rings for damage, abnormal wear, or breakage. Replace if necessary.
4. Insert the piston ring into the cylinder by hand, and push it in by using the piston.
5. Measure the ring opening clearance.
   Opening clearance limit: 1.00mm(0.039in)

6. Measure the clearance of the piston and ring groove.
   Clearance limit: 0.2mm(0.008in).
   Top ring: 0.2mm(0.008in)
   2nd & oil ring: 0.15mm(0.006in)

Caution:
Measure the clearance around the entire circumference of the ring groove.

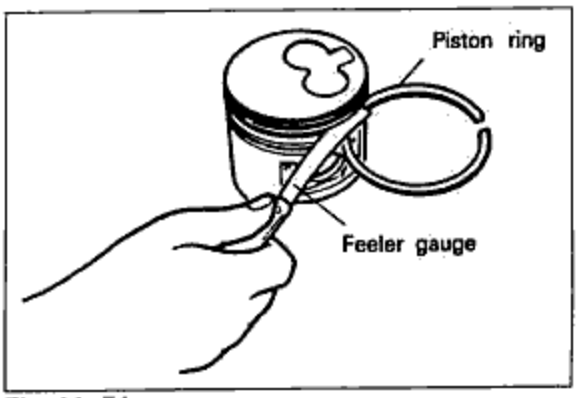

Fig. 1A-54

◈ CONNECTING ROD

1. Check each connecting rod for bending or torsion.
   Connecting rod bending limit:
   0.16mm(0.006in) per 100mm(3.94in)
   Connecting rod torsion limit:
   0.16mm(0.006in) per 100mm(3.94in)

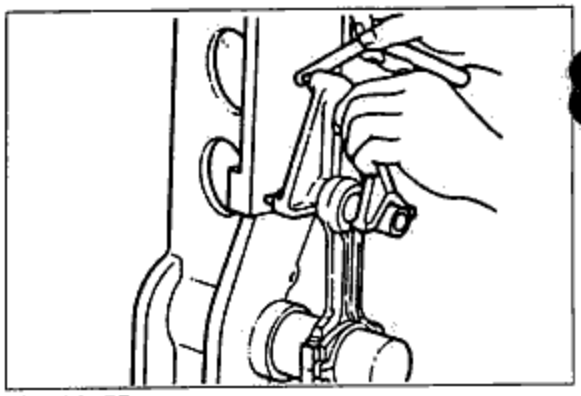
Fig. 1A-55

2. Connecting rod bushing inspection and repair.
   (1) Measure the clearance between the outer diameter of the piston pin and the inner diameter of the bushing.
   If the clearance exceeds the limit, replace the connecting rod bushing.
   Standard connecting rod bushing inner diameter:
   25.01~25.03mm(0.9846~0.9854in)
   Clearance limit: 0.05mm(0.002in)
   (2) Replacement of the connecting rod bushing.
   Use a press and a suitable pipe(diameter=27~27.5mm, 1.06~1.88in).

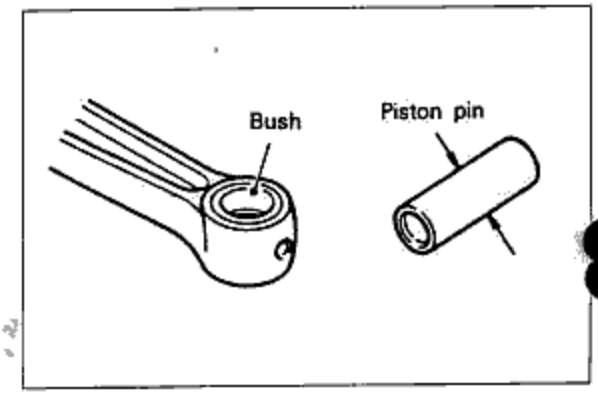

Fig. 1A-56

Cautions:
- **Before assembling, apply a coating of clean engine oil to the connecting rod bushing and connecting rod.**
- **Align the oil hole of connecting rod bushing and the connecting rod.**

(3) After pressing it in, correct the bushing inner diameter so that the clearance comes within the standard value, by using a spiral expansion reamer.

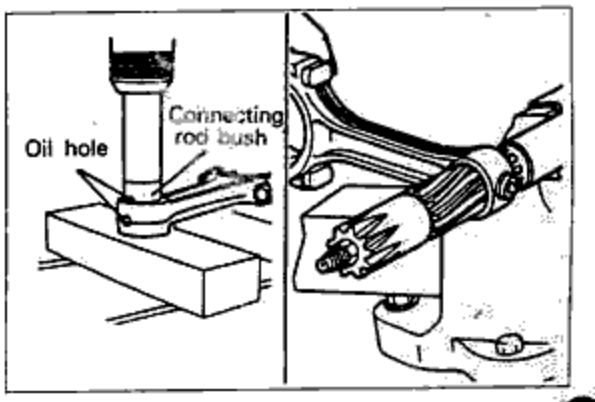

Fig. 1A-57

◈ CRANKSHAFT

1. Check around the journals and pins for damage, scoring, and oil hole clogging.
2. Check the crankshaft deflection and each diameter. Replace it if necessary.
   Deflection limit: 0.05mm(0.002in)

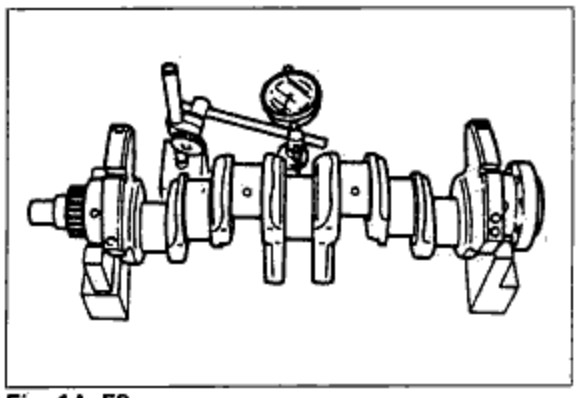

Fig. 1A-58

Standard journal diameters:
(1) Main journal diameter:
59.94~59.96mm(2.360~2.361in)
(2) Crankshaft pin diameter:
50.94~50.96mm(2.006~2.007in)
(3) Rear housing oil seal
Sliding surface : 89.95~90.00mm(3.541~3.543in)
Journal wear limit : 0.05mm(0.0020in)

If the wear exceeds the limit, replace or grind the crankshaft to agree with the undersize bearing.
Journal grinding limit: 0.75mm(0.0295in)
Undersize bearings:
0.25mm(0.010in), 0.50mm(0.020in), 0.75mm(0.0295in)

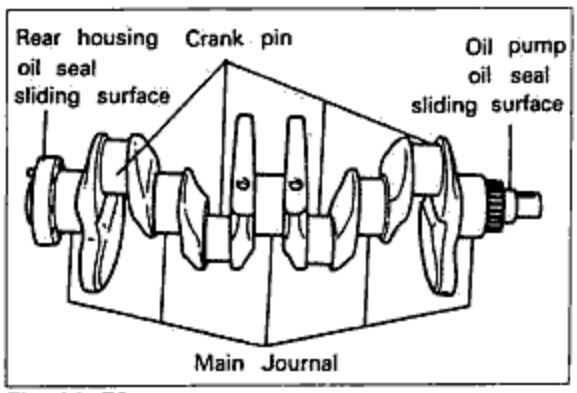

Fig. 1A-59

Caution:
When grinding the journal or pin, pay attention to each fillet R dimension.
Fillet R dimension:
2.6~3.0mm(0.102~0.118in)

◈ MAIN AND CONNECTING ROD BEARINGS

1. Check the main and connecting rod bearings
   (1) Check the bearing inside surfaces for streaking, flaking, pin holes, etc., replace all bearings as a set if there is a problem.
   (2) Check the oil clearance of each bearing

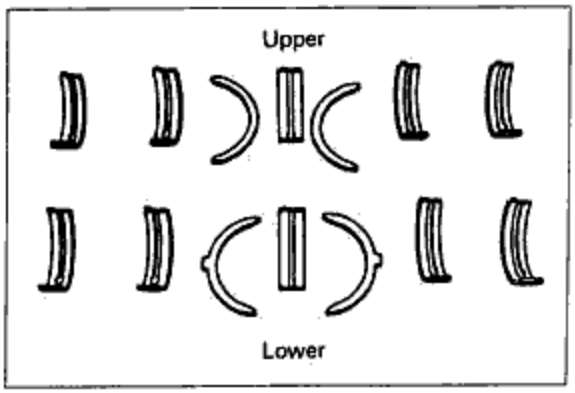

Fig. 1A-60

◈ FLYWHEEL

1. Inspection and replacement of the ring gear.
   (1) Check for damage or wear of the ring gear teeth, replace if necessary.
   (2) When disassembling the ring gear, after heating the ring gear(by using acetylene torch and so on), strike all around the ring gear and remove the ring gear.
   (3) When installing the ring gear, after heating the ring gear uniformly using a torch(approx. 250℃ ~300℃(530~636℃F), insert the ring gear.

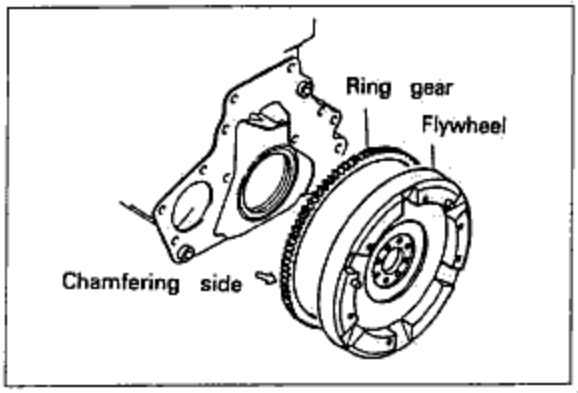

Fig. 1A-61

2. Inspection of the flywheel.
   Check the clutch disc contacting surface for scoring abrasions, roughness, or distortion.
   Repair or replace if necessary.
   Flywheel distortion limit; 0.2mm (0.008in)

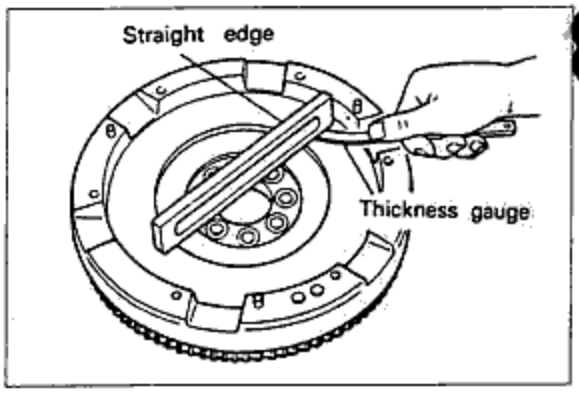

Fig. 1A-62

◈ TIMING BELT

1. Inspection of the timing belt
   (1) Replace the belt if there is any oil, grease, or moisture on it.
   (2) Check for damage, wear, peeling, cracks and hardening, replace if necessary.

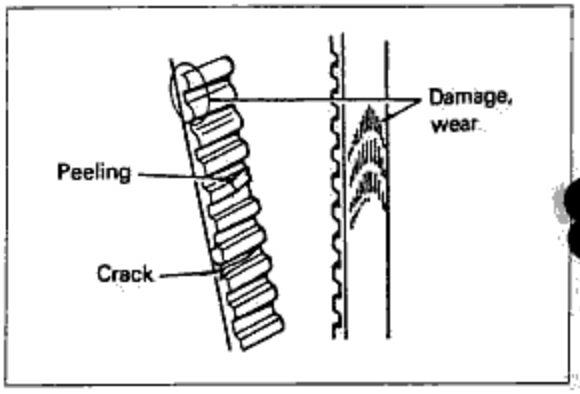

Fig. 1A-63

Cautions;
- **Never forcefully twist the timing belt. Don't turn it inside out or bend it.**
- **Be careful not to allow oil, grease, or moisture on the belt.**

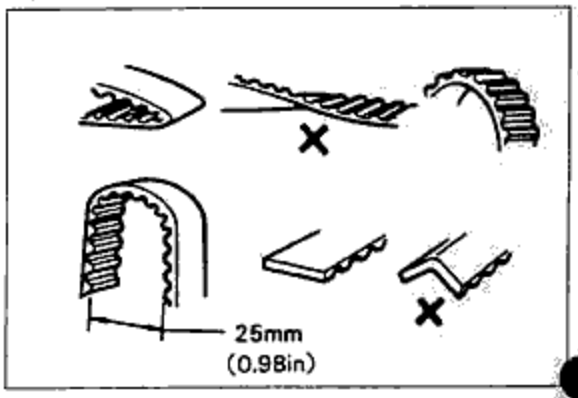

Fig. 1A-64

◈ TENSIONER

1. Inspection of the tensioner pulley.
   Check the rotation of the pulley, and check for play or abnormal noise. Replace if necessary.

   Cautions;
   - Do not clean the tensioner with cleaning fluids.
   - If it is dirty, use a rag to wipe it clean, so as to avoid scratching it.

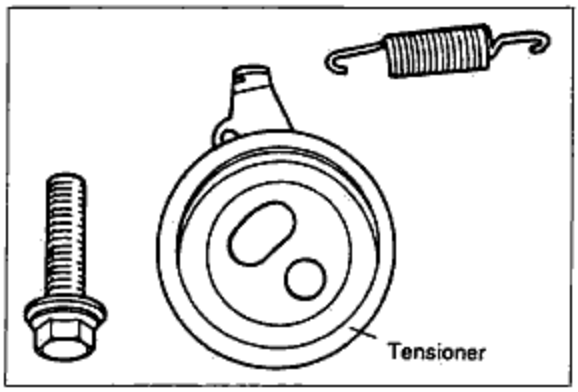

Fig. 1A-65

◈ TIMING BELT PULLEY, CAMSHAFT PULLEY, INJECTION PUMP PULLEY

1. Inspection of the pulley.
   Inspect the each pulley teeth for wear, deformation or other damage.
   Replace the pulley if necessary.

   Caution;
   Do not clean the pulley, if it is dirty, use a rag to wipe it clean, so as to avoid it being contaminated by oil, etc.

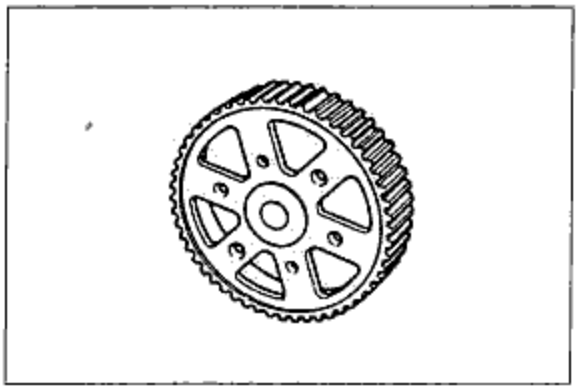

Fig. 1A-66

◈ TIMING BELT COVER (LEFT, RIGHT)

1. Inspection of the timing belt cover.
   Inspect each timing belt cover for deformation or cracks. Replace if necessary.
2. Inspection of the gasket.
   Inspect the gasket for deformation, cracks, or hardening.
   Replace if necessary.

◇ ASSEMBLY OF ENGINE

◈ ASSEMBLY NOTES

1. Be sure all parts are clean before reassembly.
2. Apply new engine oil to all sliding and turning parts.
3. Do not reuse gaskets or oil seals.
4. During reassembly, inspect all critical clearances, end plays, oil clearances and bends.
5. Tighten all bolts of critical parts to the specified torques.
6. Replace plain bearings if they are peeling, burned, or otherwise damaged.

◆ CYLINDER HEAD COMPLETE

1. Assembly of the valve seals.
   (1) Apply engine oil to the valve guides.
   (2) Using the valve seal pusher(49 S120 160), Install the valve seals.

Caution;
Be sure to use the special tool for installation.
If it is not installed correctly, the oil might work down.

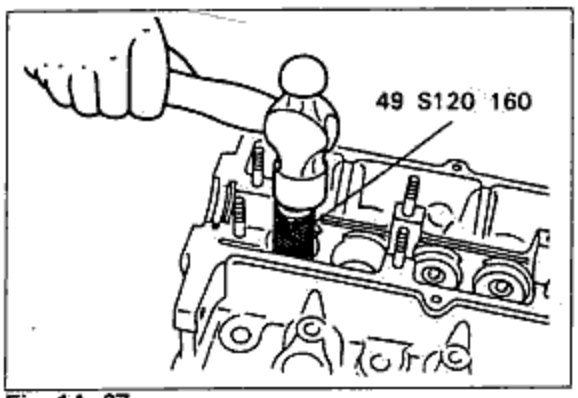

Fig. 1A-67

2. Assembly of the valves onto the cylinder head.
   (1) Install the spring seat, lower.
   (2) Insert the valve after applying the molybdenum disulphide grease to the valve stem.
   (3) Install the valve spring seat, upper.
   (4) Using the valve spring lifter(49 0636 100A) and pivot (49 S120 222), press the valve spring. And then install the spring retainer securely.

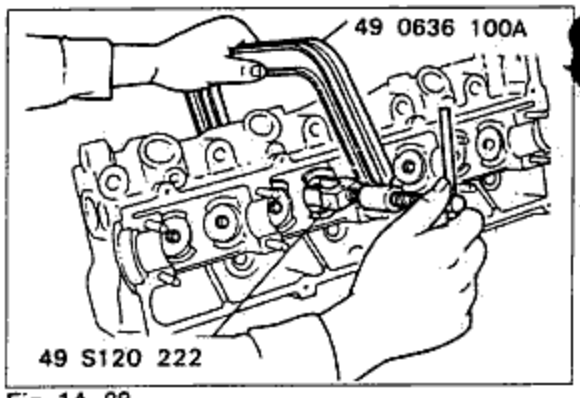

Fig. 1A-68

3. Installation of the tappets and adjusting discs.
   (1) Install the tappet in the tappet hole, after applying engine oil to the tappets.
   (2) Install the adjusting discs.
   After installing the cylinder head, adjust the adjusting discs as shown in the figure 1A-135~137.

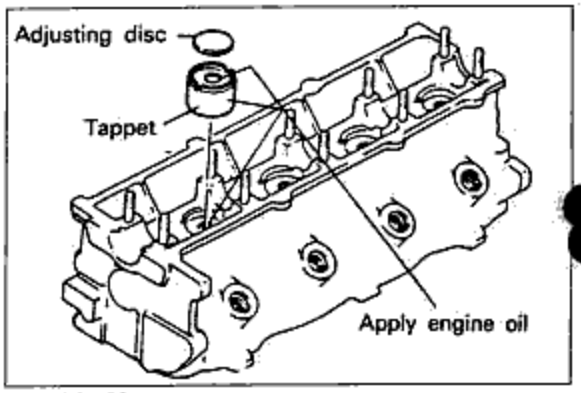

Fig. 1A-69

◆ PISTON AND CONNECTING ROD

1. Assembly of the piston and connecting rod.
   (1) Align the oil hole in the large end of the connecting rod with the "F" mark on the piston to be the left side from the "F" mark.
   (2) Apply a coating of engine oil to the small end of the connecting rod and all around the piston.
   (3) Insert a snap ring into one of the piston pin holes in the piston.
   (4) Connect the piston and connecting rod by the piston pin, and lock the snap ring so it won't come out.(When doing so, the piston should be heated to 50~75℃, 122~167°F)

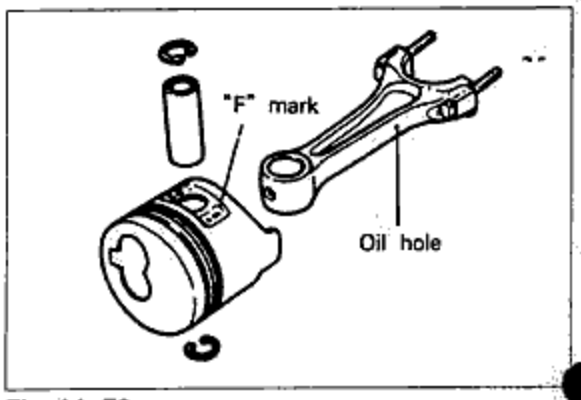

Fig. 1A-70

2. Assembly of the piston rings.
   (1) Assemble the piston ring to the piston by using a piston ring inserting tool(commercially available).
   The order of assembly is oil ring expander, oil ring, second ring, top ring.
   (2) Align the piston ring matching places, as shown in the figure.

Cautions:
- **Apply a liberal coating of engine oil during installation.**
- **The rings must be mounted so that the R2(2.21) TN marks face upward.**

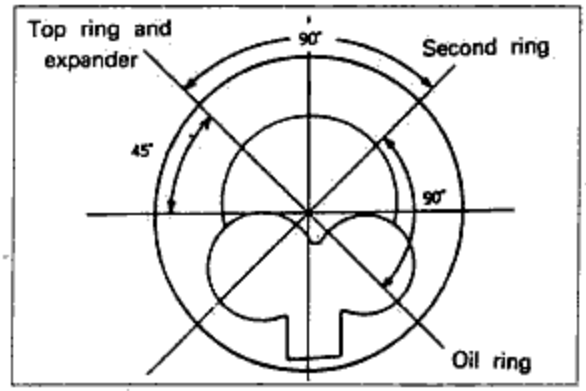

Fig. 1A-71

3. Installation of the piston and connecting rod assembly.
   (1) Fit the connecting rod bearing to the connecting rod, and apply a coating of engine oil.
   (2) After cleaning the inner surface of the cylinder, apply a coating of engine oil.
   (3) Insert each piston and connecting rod into the cylinder block using a piston inserting tool.(commercially available)

Cautions;
- **The pistons must be inserted so that the "F" marks face the front of the cylinder block.**
- **Apply a liberal coating of engine oil to the cylinder walls, piston circumference, and rings.**

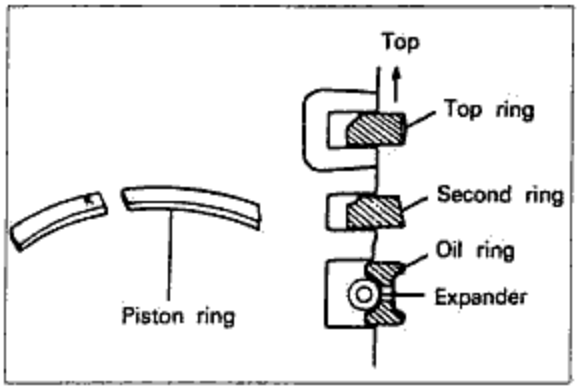

Fig. 1A-72

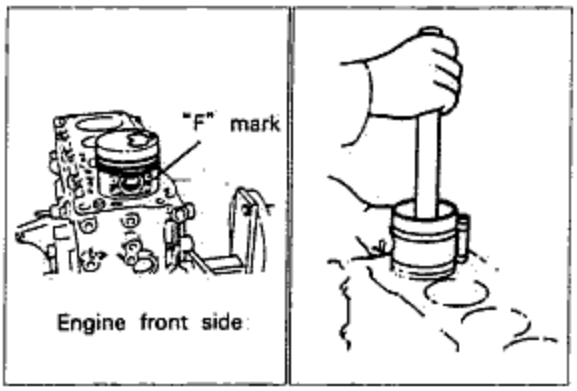

Fig. 1A-73

◆ CRANKSHAFT

1. Assembly of the crankshaft.
   (1) Install the oil jets to the cylinder block.
   Oil jet tightening torque: 1.2~1.8m·kg(9~13ft·lb)
   (2) Install the main bearings

Caution;
No oil, dirt, etc. should be on the back surface of the bearings.

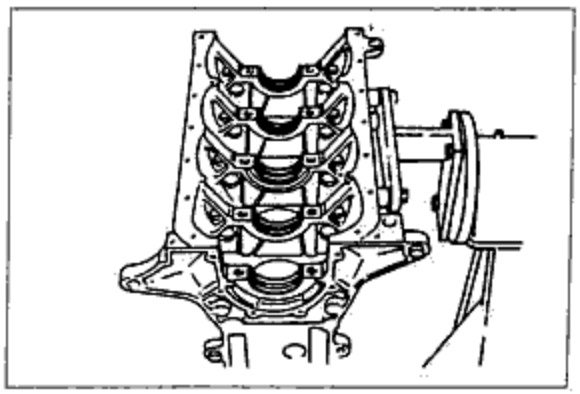
Fig. 1A-74

(3) Install the crankshaft.

(4) Check the oil clearance of the crankshaft and main bearings with a plastigauge.
  (a) Remove any foreign material from the journal or bearing.
  (b) Position the plastigauge on top of the journal (in the journal axial direction).
  (c) Set the main bearing cap in position, and tighten it to the specified torque, and in the order shown in the figure.
  Main bearing cap tightening torque:
  8.4~9.0m·kg(61~65ft·lb)
  (d) Remove the main bearing cap, and measure the oil clearance.
  Standard oil clearance:
  0.031~0.049mm(0.0012~0.0019in)
  Oil clearance limit: 0.08mm(0.0031in)
  (e) If the oil clearance exceeds the limit, replace the main bearings with new ones.
  And measure the oil clearance again.
  (f) In case the oil clearance exceeds the limit even if the main bearings are replaced, repair the crankshaft by grinding, and use undersize bearings.

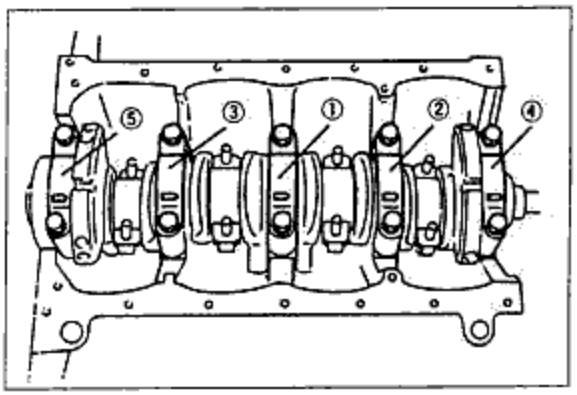

Fig. 1A-75

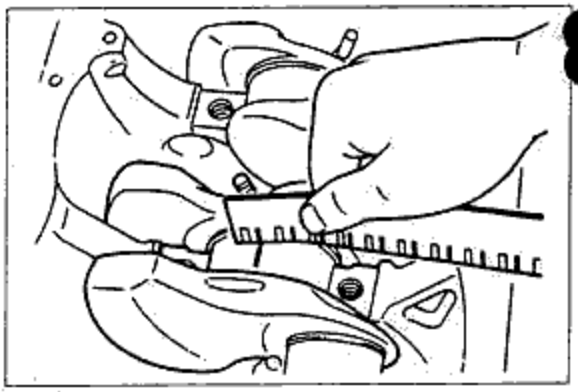
Fig. 1A-76

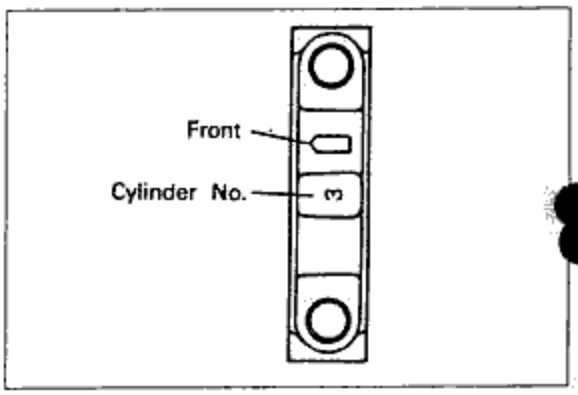

Fig. 1A-77

Caution
- **Position the plastigauge horizontally on the crankshaft, away from the oil hole.**
- **Do not rotate the crankshaft when measuring the oil clearance.**
- **Install the main bearing cap according to the "cap No." and "←" mark.**

(5) After checking and correcting the oil clearance, apply a coating of engine oil to the main bearing and main journal, and then install the crankshaft.

(6) Select using the thrust bearing according to the value of the crankshaft end play measured by disassembling.

(7) Apply a coating of engine oil to the thrust bearing, and install to the center part of the main journal.

Caution;

Install the thrust bearing so that the inner surface of the oil groove faces toward the cylinder block side.

(8) With the main bearing cap in the set condition, manually push the crankshaft toward the front, and then, with it pulled toward the rear, tighten the bolt to the specified torque.

Main bearing cap tightening torque:

8.4~9.0 m-kg(61~65ft·lb)

(9) Measure the end play of the crankshaft, and confirm that it is within the standard range.

At this time, check to be sure that the crankshaft can be lightly turned.

Standard crankshaft end play:

0.04~0.28mm(0.0016~0.0111 in)

End play limit:0.3mm(0.0118in)

(10) If the end play is not within the standard range, select another thrust bearing.

Standard thrust bearing width:

2.18~2.23mm(0.0858~0.0878in)

Undersize thrust bearing width:

2.00~2.05mm(0.0787~0.0807in)

Caution;

- **First replace the rear thrust bearings, if still not within limit, replace the front thrust bearings also.**

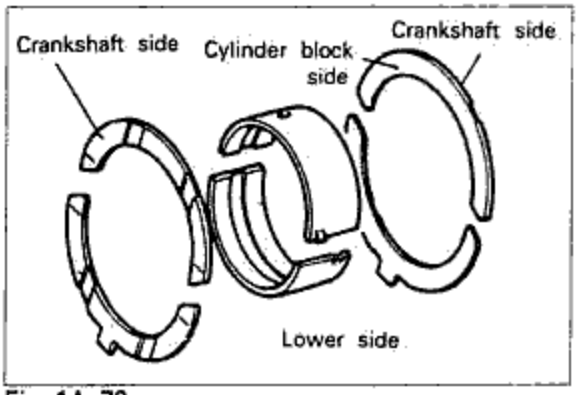

Fig. 1A-78

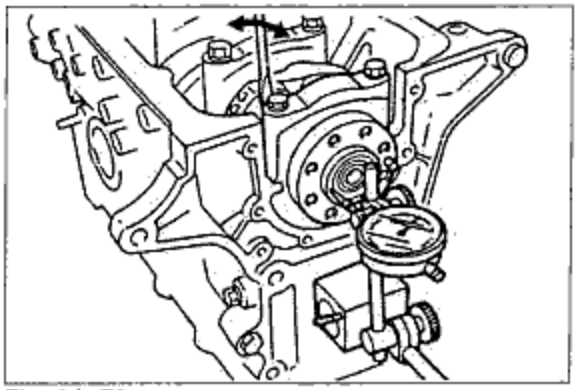

Fig. 1A-79

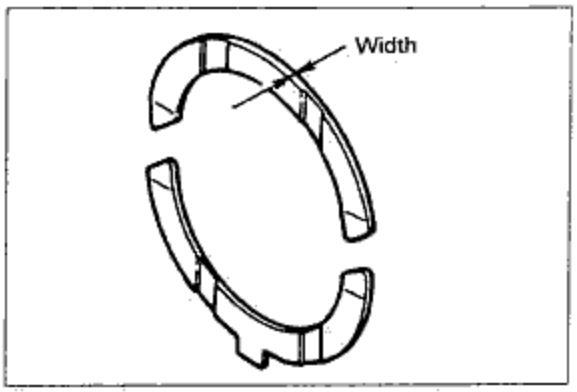

Fig. 1A-80

(11) Use a pipe to tap the pilot bearing onto the crankshaft.

Cautions;

- Apply engine oil to the outer circumference of the pilot bearing and the crankshaft.
- Set a pipe against the outer race of the bearing, and tap evenly.
- After installation, apply grease to the bearing.

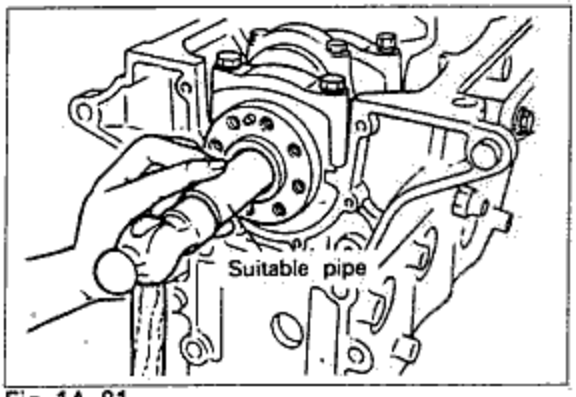

Fig. 1A-81

2. Assembly of the connecting rod cap

(1) Measure and adjust the connecting rod bearing and crankshaft pin journal oil clearance by the same procedure used to measure and adjust the crankshaft and main bearing oil clearance.

Connecing rod cap tightening torque:
7.0~7.5m·kg(51~54ft·lb)

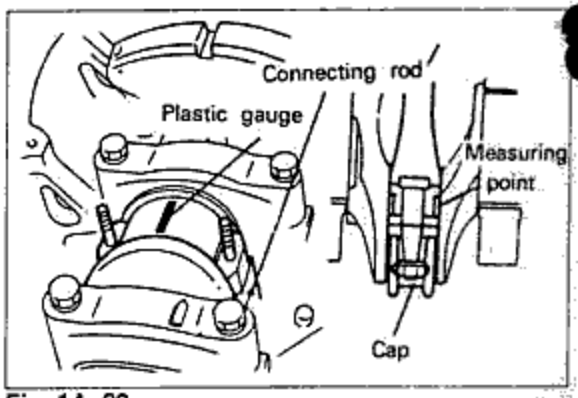

Fig. 1A-82

Standard oil clearance:
0.03~0.06mm(0.0012~0.0024in)
Oil clearance limit:0.08mm(0.0031in)
Undersize connecting rod bearings:
0.25mm(0.010in), 0.50mm(0.020in), 0.75mm(0.030in)

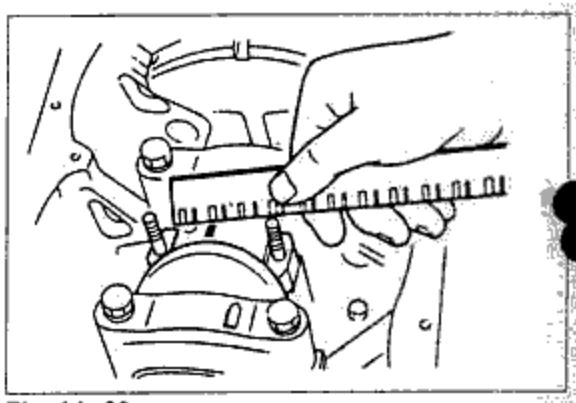

Fig. 1A-83

(2) Check the end play of the connecting rod.

Standard connecting rod end play:
0.11~0.28mm(0.0043~0.0102in)
End play limit:0.35mm(0.014in)

Caution;

- Measure the connecting rod end play before installing the connecting rod cap.

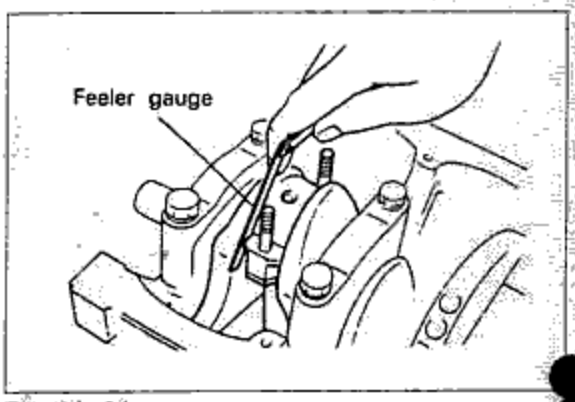

Fig. 1A-84

(3) Install the connecting rod bearing cap, and tighten to the specified torque.
When doing so, apply a coating of engine oil to the bolt threaded parts, nuts and bearing surfaces.
Connecting rod bearing cap tightening torque:
7.0~7.5m·kg(51~54ft·lb)

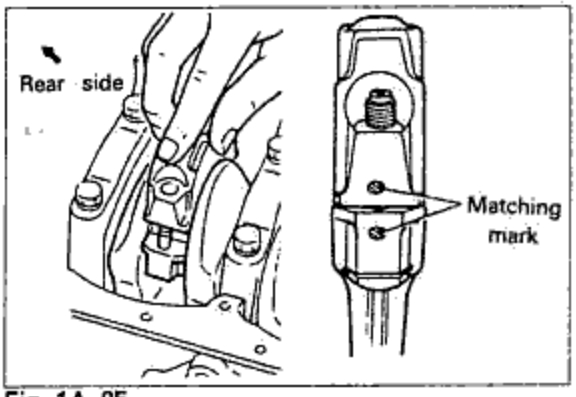

Fig. 1A-85

Cautions:
- **When installing the connecting rod cap, do so after aligning the cap and connecting rod matching marks.**
- **Before installation, be absolutely sure to apply a coating of engine oil to the bearing.**

REAR COVER ASSEMBLY

1. Assembly of the rear cover oil seal.
Press the oil seal into the rear cover.

Caution;
Before pressing in, apply the engine oil to the rear cover and oil seal.

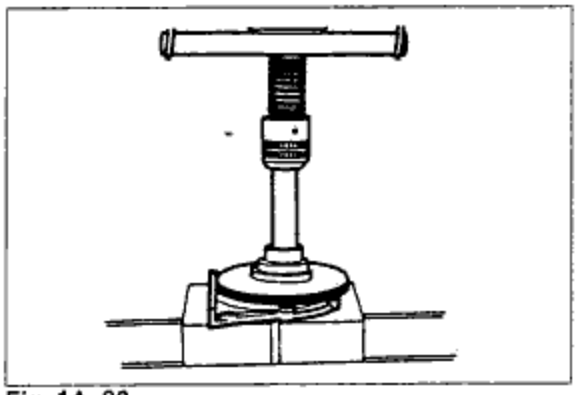
Fig. 1A-86

2. Installation of the rear cover assembly.
(1) Install the rear cover assembly through the gasket into the cylinder block.
Rear cover assembly tightening torque:
0.7~1.0m·kg(5~7ft·lb)

Caution;
- **Apply engine oil to seal lip, before installing cover.**
- **Be careful not to slip spring of Oil seal.**

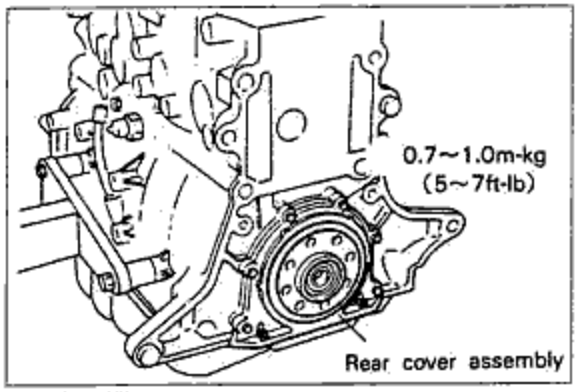

Fig. 1A-87

OIL PUMP BODY ASSEMBLY

1. Install an O-ring applied with grease(lithium base, NLGI No.2) onto the oil pump body assembly.
2. Install the oil pump assembly after applying sealant 515(1016 77 739).
Oil pump assembly tightening torque:
M8(Smaller) bolts: 1.6~2.3m·kg(12~17ft·lb)
M10(Bigger)bolts: 3.2~4.7m·kg(23~34ft·lb)

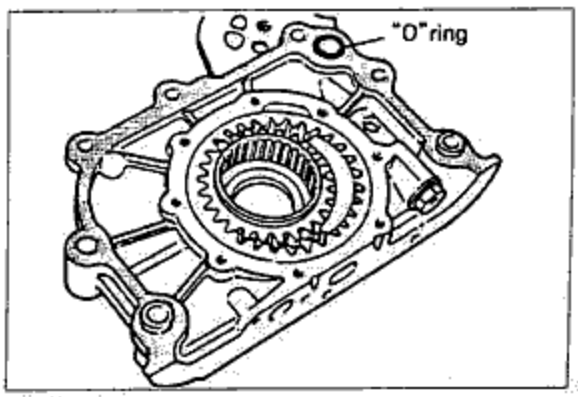

Fig. 1A-88

Cautions;

(a) Do not let sealant get into the oil hole.
(b) Apply engine oil to oil seal lip.
(c) Before applying the sealant, use a rag to thoroughly clean away any dirt or grease from the contact surfaces of the cylinder block and oil pump assembly.
(d) Apply the sealant continuously without any interruption around the bead as shown in the figure.
(e) After installation, clean away any sealant which oozes out.

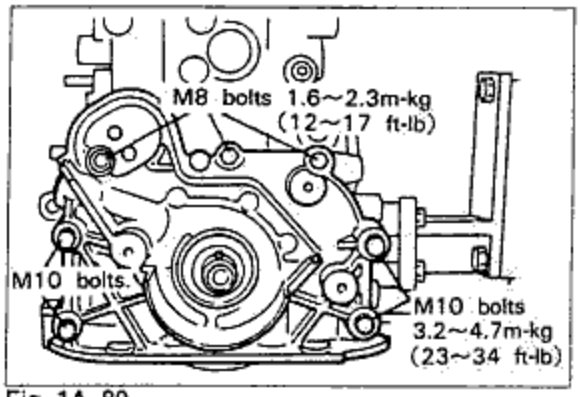

Fig. 1A-89

◆ OIL STRAINER, OIL BAFFLE PLATE AND OIL PAN

1. Cut away the part of the gasket which projects out from the rear cover assembly to the oil pan.

Caution;

Do not scratch the rear cover assembly.

Tightening torque:

7.0~9.8N·m(0.7~1.0kg·m, 5~7ft·lb)

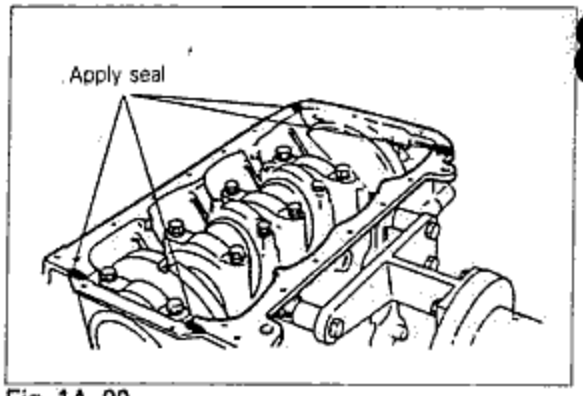

Fig. 1A-90

2. Before assembly

This method must be used to install the oil pan. Apply sealant to the oil pan and oil baffle plate. It should be put on continuously(thickness 2~4mm, 0.08~0.16in), rimming the surface inside the bolt holes, and the end should overlap.

Caution;

Before application, remove with a rag any dirt or grease from the contact surfaces. After the sealant is applied, the pan and oil baffle plate must be secured within 30 minutes.

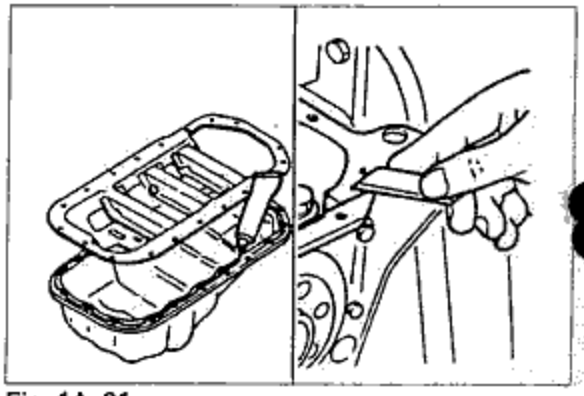
Fig. 1A-91

3. Install the oil baffle plate on cylinder block.
4. Install the oil strainer on the oil pump body and cylinder block and tighten it to the specified torque.

Oil strainer tightening torque;

7.0~9.8N.m(0.7~1.0kg·m, 5~7ft·lb)

5. Install oil pan on the cylinder block, tightening to the specified torque.

Oil pan tightening torque;

7.0~9.8N·m(0.7~1.0kg·m, 5~7ft·lb)

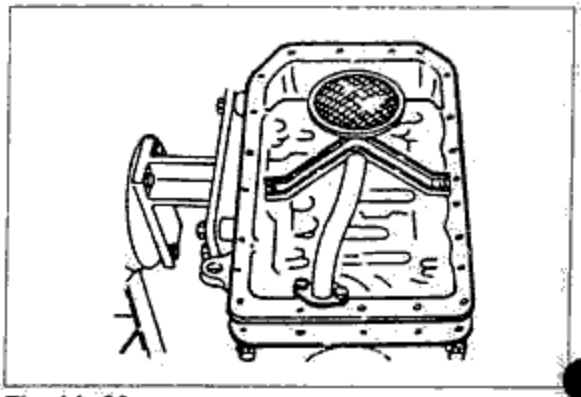
Fig. 1A-92

◈ END PLATE, FLYWHEEL ASS'Y, CLUTCH COVER

1. Install the end plate and oil pressure switch.
   (1) End plate tightening torque:
   1.6~2.3m·kg(12~17ft·lb)
   (b) Oil pressure switch tightening torque:
   1.2~1.8m·kg(9~13ft·lb)
   (c) Install the under cover

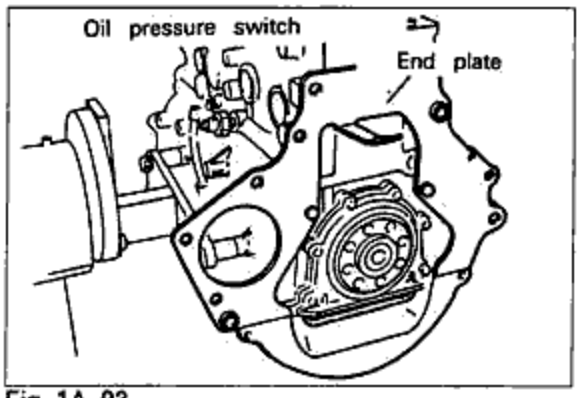

Fig. 1A-93

2. Install the flywheel assembly
   (1) Align the flywheel to the lock pin of the crankshaft and install it.
   (2) The flywheel bolt must be used new one.
   If the flywhell bolt is used, remove the attached sealant and apply the new sealant.
   (3) Install the flywheel assembly.
   Tightening torque: 18~19m·kg(130~137ft·lb)

Cautions;
- Sealant(part No. 8530 77 743) must be applied to the lock bolt to prevent oil leakage from the lock bolts.
- After installation do not remove the ring gear brake.

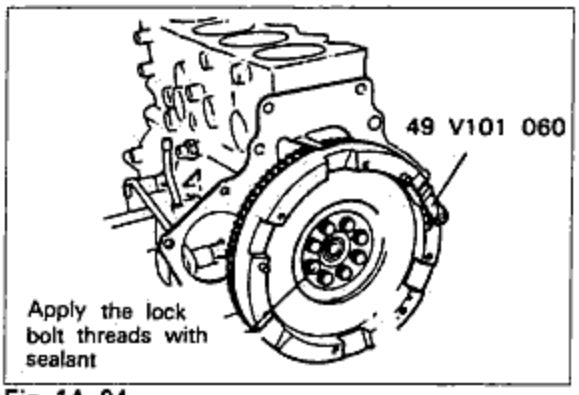

Fig. 1A-94

3. Install the clutch disc and clutch cover using the clutch disc center tool(49 SE01 310).
   Clutch cover tightening torque:
   2.2~3.3m·kg(16~24ft·lb)

Cautions;
- Remember to insert the spring washer.
- Be careful to follow the clutch disc installation directions exactly.(See Section 6.)

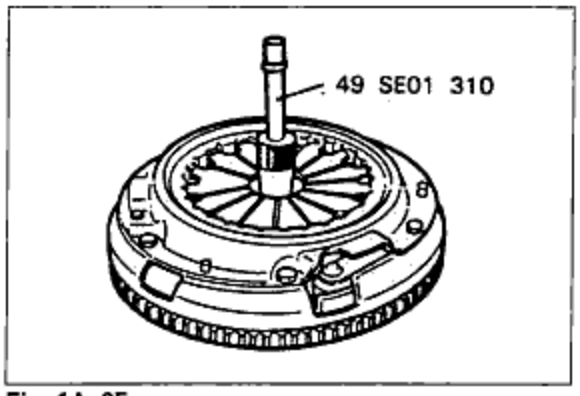

Fig. 1A-95

◈ TIMING BELT CRANK PULLEY

1. Install the timing belt crank pulley
   (1) Install the semicircular(woodruff) key onto the crankshaft.
   (2) Install the timing belt crankshaft pulley.
   (3) Tighten it to the specified torque.
   Timing belt pulley bolt tightening torque:
   16~17m·kg(116~123ft·lb)

   (4) Release the ring gear brake, move the No. 1 piston to the top position, and then turn the flywheel approximately 45° in the forward direction.

Caution;
This is to prevent damage to the piston and valve when the cylinder head is installed.

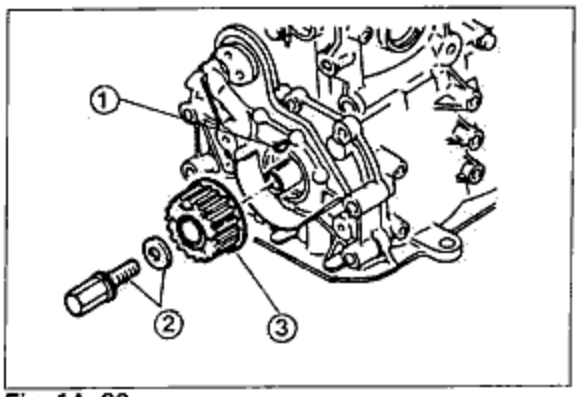

Fig. 1A-96

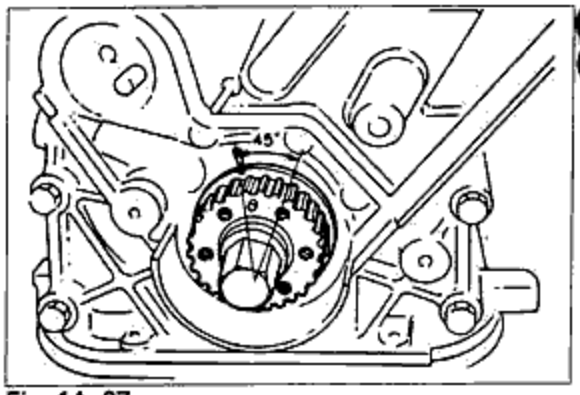

Fig. 1A-97

◈ CYLINDER HEAD COMPLETE

1. Install the cylinder head.
   (1) With a rag thoroughly remove all dirt and grease from the top of the cylinder block.
   (2) Place the cylinder head gasket in position.

Caution;
- **Use a new cylinder head gasket.**

   (3) Remove any dirt or grease form the bottom surface of the cylinder head.
   (4) Place the cylinder head in position.
   (5) Measure the length of the cylinder head bolt below the head. If the measured value is within the limit, apply a coating of engine oil to the threaded part and install.

   Length of cylinder head bolt below head;
   - **Standard length;**
     112.7~113.3mm(4.437~4.460in)
   - **Limit length;114.5mm**

Caution;
- **If the length of the bolt below the head exceeds the limit, it must be replaced with a new one.**

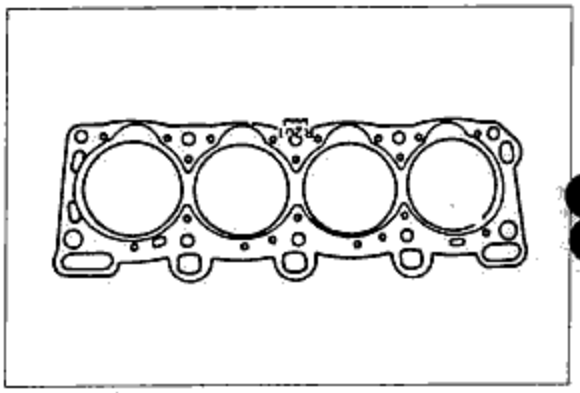
Fig. 1A-98

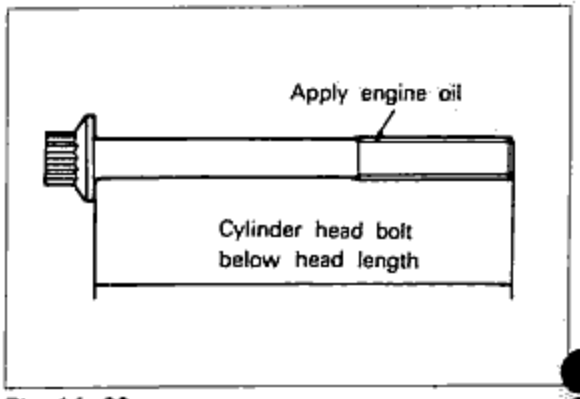

Fig. 1A-99

(6) Tighten the cylinder head bolts to the tightening torque of 3.0m·kg(22ft·lb) in the order shown in the figure.

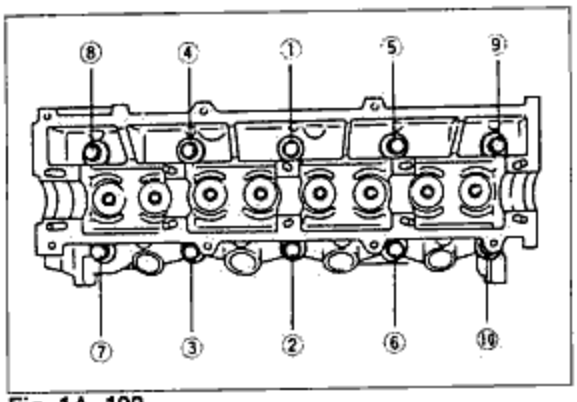

Fig. 1A-100

(7) Make paint marks on the bolt heads, as shown in the figure.
(8) With the paint marks as a reference point, turn the cylinder head bolts another 90° (90° ~ 105°) in the tightening direction, turning them in the order shown in the figure.
(9) Then tighten them once again 90° (90° ~ 105°) more in the tightenning order shown in the figure.

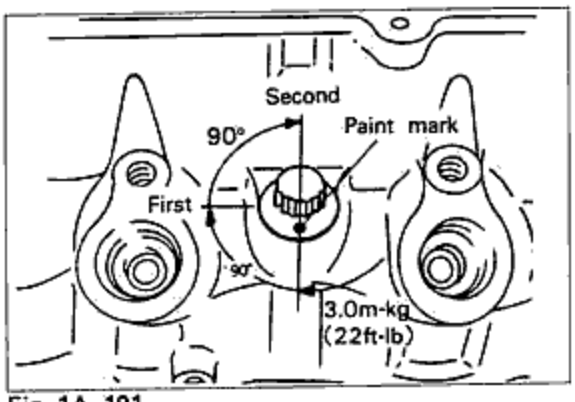

Fig. 1A-101

Caution;

Be absolutely sure to tighten all bolts in the order shown in the figure.

2. Install the camshaft.
(1) Apply a coating of engine oil to the camshaft and journal part of the cylinder head.
(2) Set the seal cap, and then apply sealant 515 (1016 77 739) to the places shown in the figure.
(3) Set the camshaft and camshaft cap, and then loosely tighten the camshaft cap bolt.

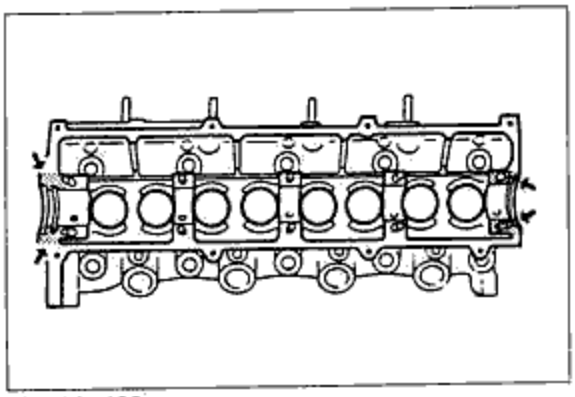
Fig. 1A-102

Note;

Set the camshaft so that the key groove faces directly upward.

(4) Apply a coating of engine oil to the lip part of the camshaft oil seal, and then insert it.
(5) Tighten the camshaft cap nut to the specified torque.
Camshaft cap tightening torque:
2.0~2.7m·kg(15~20ft·lb)

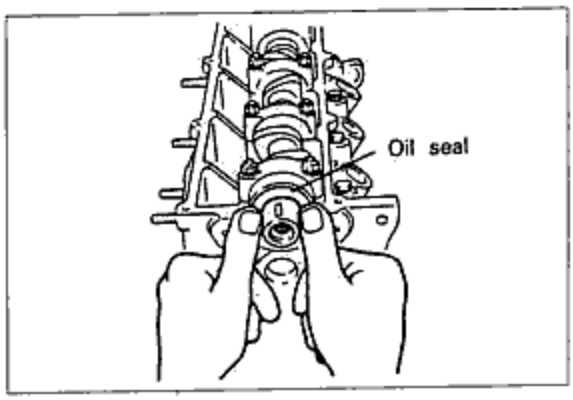

Fig. 1A-103

Cautions;

- When tightening the camshaft cap nut, do so evenly, and in the order shown in the figure.
- The adjustment of the valve clearance should be made only after the camshaft pulley, injection pump pulley and timing belt have been installed.

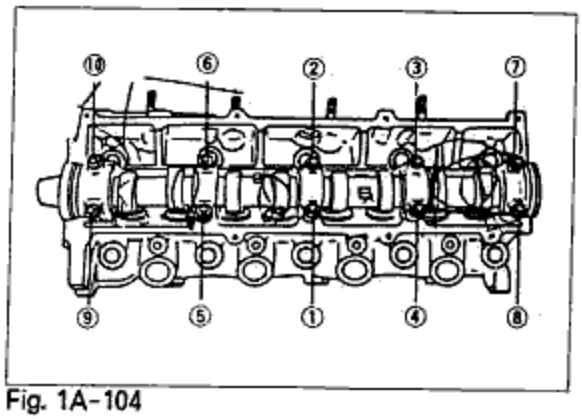

Fig. 1A-104

3. Install the glow plugs and injection nozzles.
   (1) Install the glow plugs and glow plug connector.
   Glow plug tightening torque:
   1.5~2.0m·kg(11~15ft·lb)

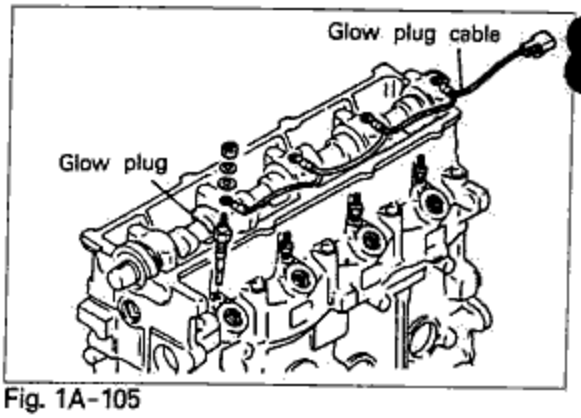

Fig. 1A-105

   (2) Install the corrugated washers, copper gaskets and injection nozzles and leak pipe as shown in the figure.

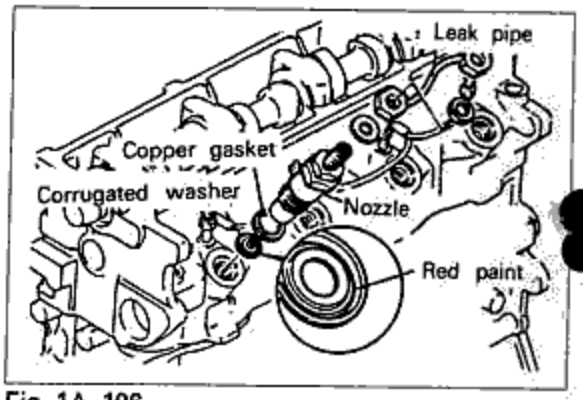

Fig. 1A-106

Cautions;

- Be sure that the corrugated washer is in the directional position shown in the figure.
- The corrugated washer and copper gasket must be replaced with new ones each time the injection nozzle is removed.

Injection nozzle tightening torque;
6.0~7.0m·kg(43~51ft·lb)

◆ ENGINE HANGER, OIL LEVEL GAUGE GUIDE, INJECTION PUMP STAY

1. Install the oil level gauge guide, and then the guide pipe and hose.
2. Install the engine hanger and injection pump stay.
   Engine hanger tightening torque:
   1.6~2.3m·kg(12~17ft·lb)
   Pump stay tightening torque:
   3.2~4.7m·kg(23~34ft·lb)

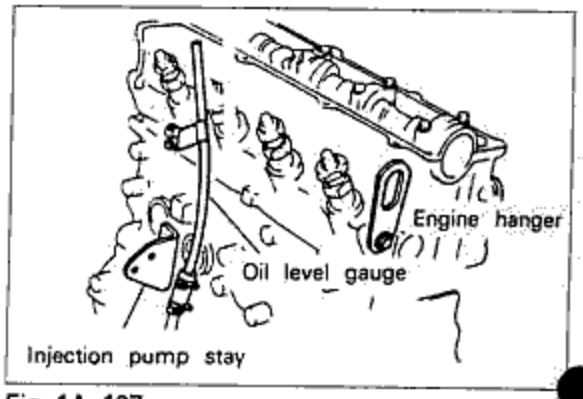

Fig. 1A-107

◈ WATER PUMP ASS'Y AND INJECTION PUMP BRACKET

1. Assembling the water pump assembly
   (1) After cleaning where the water pump and cylinder block meet, install a new gasket.
   (2) Install the water pump assembly and alternator strap.
   (3) Tighten the water pump assembly to the specified torque.
   Water pump tightening torque:
   :3.2~4.7m·kg(23~34ft·lb)

Caution;
Before installation, remove any dirt from the contact surface. Use a new gasket.

2. Install the injection pump bracket.
   (1) Check to be sure that the tubler pin is installed in position.
   (2) Check to be sure that the seal rubber is installed.
   (3) Tighten the bracket to specified torque.
   Bracket tightening torque:
   Nut:3.2~4.7m·kg(23~34ft·lb)
   Bolt:1.6~2.3m·kg(12~17ft·lb)

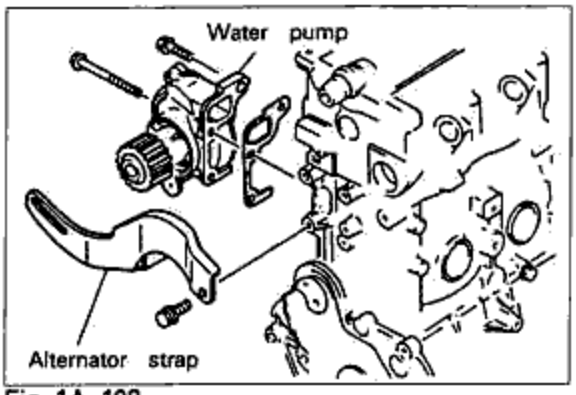

Fig. 1A-108

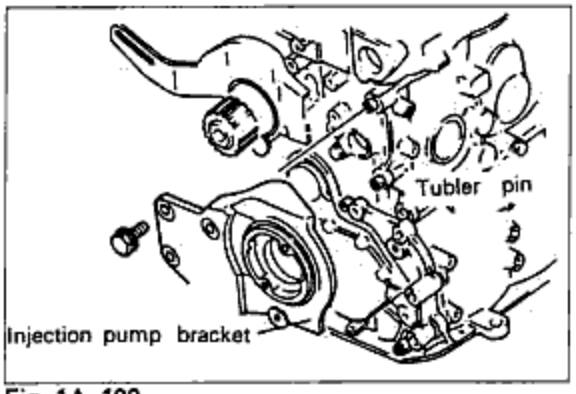

Fig. 1A-109

◈ FRONT SEAL PLATE AND CAMSHAFT PULLEY

1. Assembling the front seal plate
   (1) Check to be sure that the gasket is installed in front seal plate.
   (2) Tighten the front seal plate to specified torque.
   Seal plate tightening torque:
   0.8~1.2m·kg(6~9ft·lb)

Caution;
Check to be sure that the seal plate sealing rubbers are installed in position.

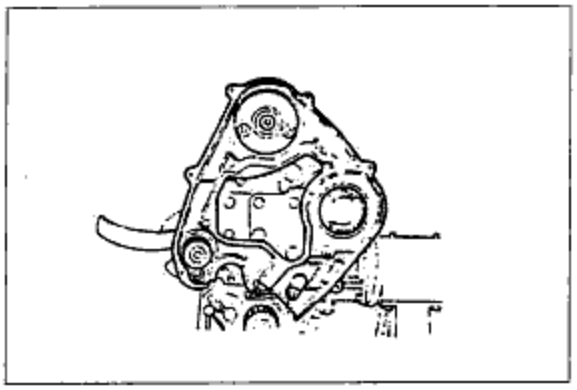
Fig. 1A-110

2. Install the camshaft
   (1) Connect the camshaft pulley onto the camshaft with the semicircular(Woodruff) key.
   (2) Hold the camshaft with a wrench(29 mm, 1. 14in), then tighten the camshaft pulley lock bolt to the specified torque.
   Camshaft pulley tightening torque:
   5.6~6.6m·kg(41~48ft·lb)

Cautions;
- **Check to be sure that the mark on the camshaft pulley aligns with the mark on the seal plate.**
- **Don't damage the cylinder head edge with the wrench.**

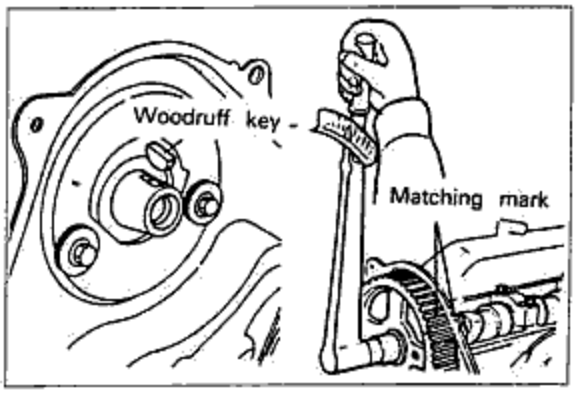

Fig. 1A-111

◈ THERMOSTAT AND COOLING FAN PULLEY BEARING COMPLETE

1. Install the thermostat
   (1) Install the thermostat casing and thermostat through the gasket.
   (2) Install the thermostat and casing assembly through the gasket into the cylinder head, connect the bypass hose to the thermostat assembly.
   Casing assembly tightening torque:
   1.6~2.3m·kg(12~17ft·lb)

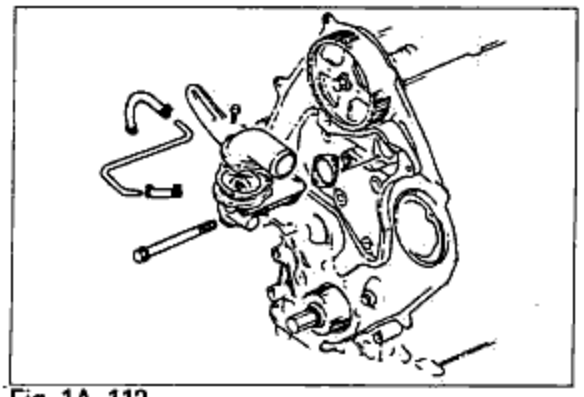

Fig. 1A-112

2. Install the cooling fan pulley bearing complete, tightening to specified torque.

   Tightening torque:3.2~4.7m·kg(23~34ft·lb)

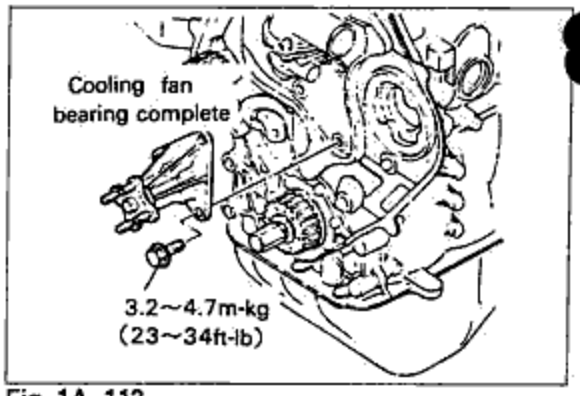

Fig. 1A-113

◈ INJECTION PUMP AND PULLEY

1. Install the injection pump and pulley
   (1) Affix the injection assembly to the injection pump stay and bracket.

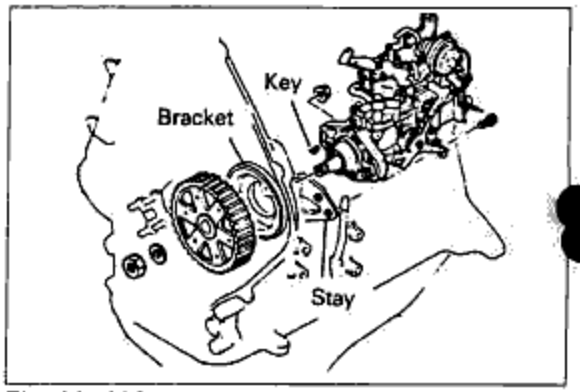

Fig. 1A-114

   (2) Set the woodruff key to the pump shift.
   (3) Install the pulley to the pump shift, as shown in the figure after setting the pulley and bracket with suitable bolt(M8×1.25) not to be rotated.

Caution;
The bolt for preventing from rotation is not to be excessively tightened.

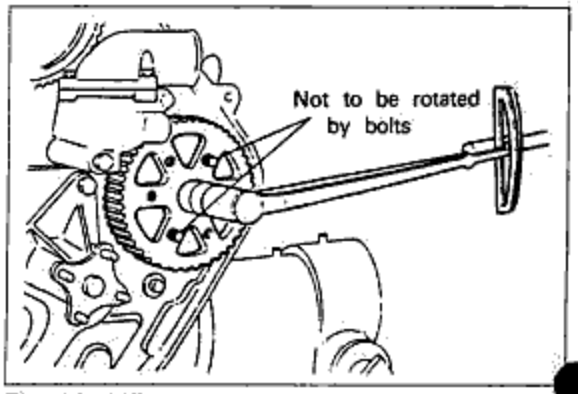

Fig. 1A-115

(4) Tighten the pulley to the specified torque.
Injection pump pulley tightening torque:
6.0~7.0m·kg(43~52ft·lb)

(5) Align the injection pump assembly to matching mark during disassembly, tightening to the specified torque.
Injection pump assembly tightening torque:
1.6~2.3m·kg(12~17ft·lb)

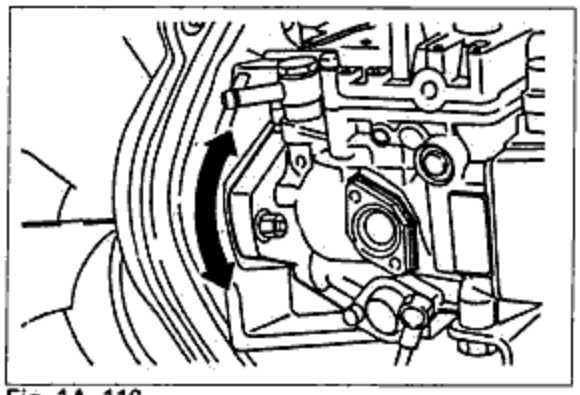

Fig. 1A-116

(6) Align the injection pump matching mark and front seal plate matching mark.

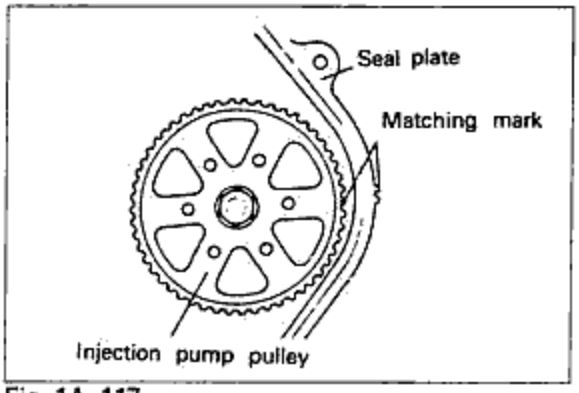

Fig. 1A-117

◆ TIMING BELT TENSIONER

1. Install the timing belt tensioner and spring in a fully loosened position.
2. Position the timing belt tensioner all the way to the water pump side, and then tighten the lock nut temporarily.
3. Return the crankshaft about 45° to the timing mark which is marked on the oil pump housing.

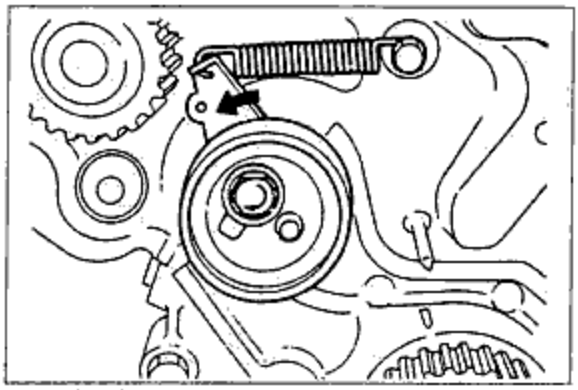

Fig. 1A-118

Caution;

- **Check to be sure that the matching marks of the camshaft pulley and the injection pump pulley align to the each matching mark on the seal plate.**

4. Install the timing belt.

Cautions;

- **Before assembling the timing belt, check to be sure that dust and oil attach to the pulley.**
- **If the timing belt is being reused, install it in accordance with direction of matching mark which is marked in disassembling.**

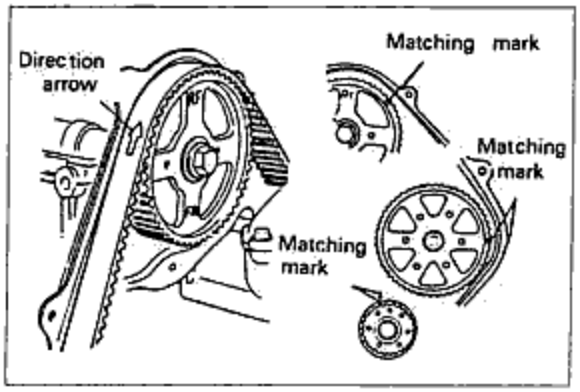

Fig. 1A-119

5. Loosen the tensioner lock bolt so that tension is applied to the timing belt by the tensioner spring.
6. Turn the crankshaft twice in the direction of rotation(clockwise) to equalize tension on the timing belt.

Caution;
Don't rotate in the reverse direction.

7. Tighten the timing belt tensioner lock bolt.
Timing belt tensioner tightening torque:
3.2~4.7m·kg(23~34ft·lb)

8. Recheck the timing marks on the crankshaft, camshaft pulley and injection pump pulley.
9. Check the timing belt tension.
Standard timing belt deflection:
10.8~12.9mm(0.43~0.51in)/10kg(22lb)

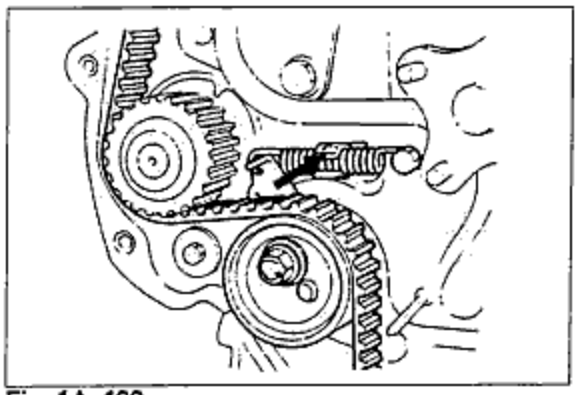

Fig. 1A-120

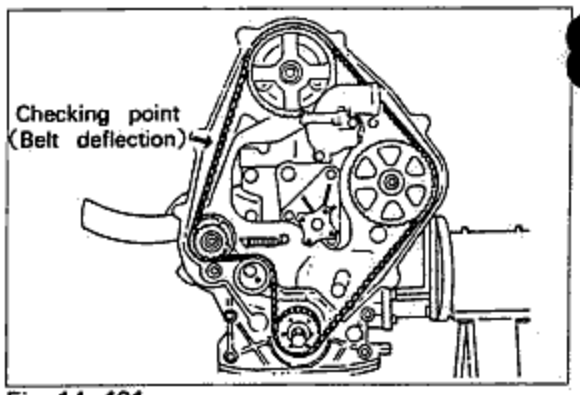

Fig. 1A-121

◆ TIMING BELT COVER

1. Install the left and right timing belt covers.
Install the injection pump pulley cover.
Timing belt cover tightening torque:
0.7~1.0m·kg(5~7ft·lb)

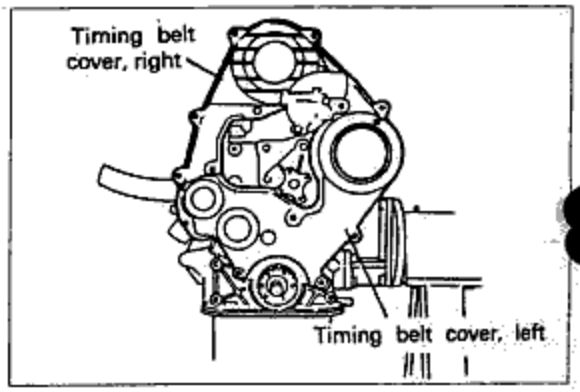

Fig. 1A-122

◈ CRANKSHAFT PULLEY

1. Assembly of the crankshaft pulley.
   (1) Install the ring gear brake(49 V101 060).
   (2) After aligning the knock pin hole for determining position of the pulley to the knock pin of timing belt crank pulley, assemble it.
   (3) After aligning torsional damper to knock pin hole, assemble it.

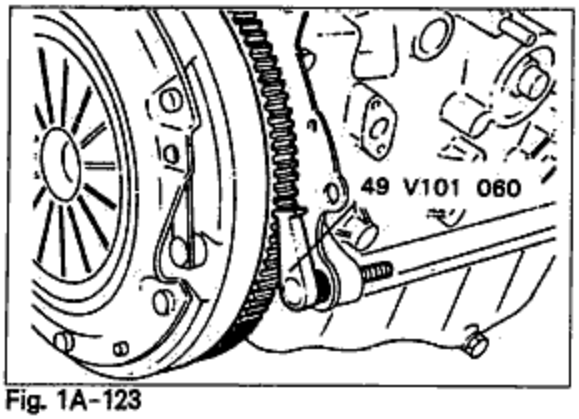

Fig. 1A-123

   (4) Install the crankshaft pulley and torsional damper, and then tighten to the specified torque by using hexagon head wrench.
   Crank pulley tightening torque:
   2.3~3.3m·kg(17~24ft·lb)

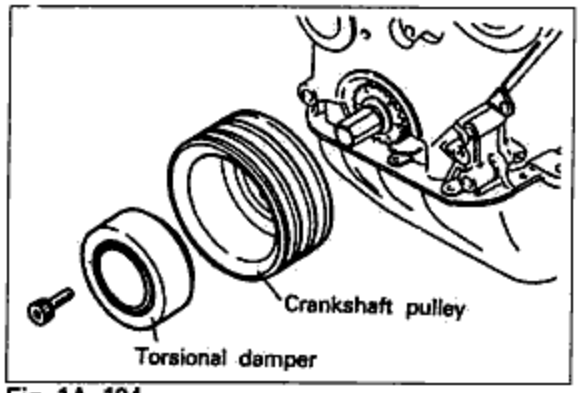

Fig. 1A-124

◈ INJECTION PIPE, FUEL LEAK PIPE AND OIL LEVEL GAUGE

1. Install the injection pipe and fuel leak pipe.

Caution:
Be sure there is no dirt, etc. on the connecting section of pipe.

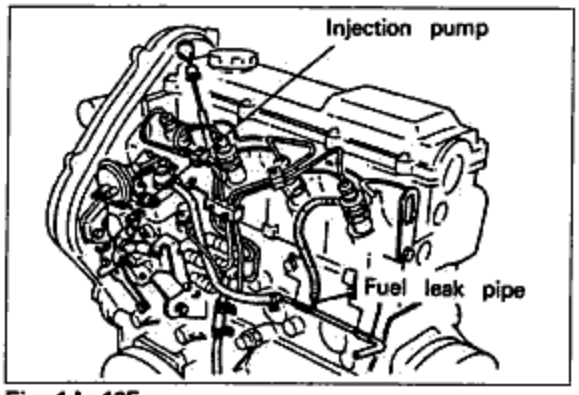

Fig. 1A-125

2. Install the oil level gauge.

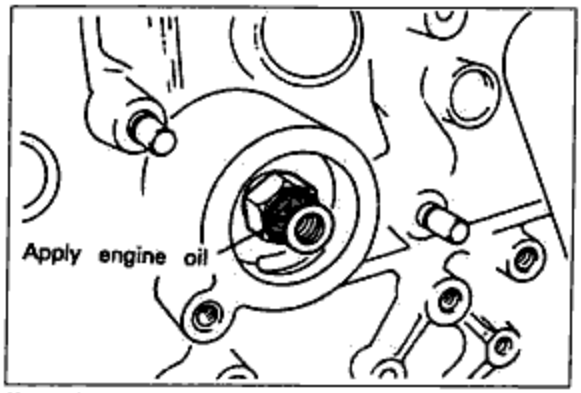

Fig. 1A-126

◈ EXHAUST AND INTAKE MANIFOLD

1. Assembling the exhaust manifold
   (1) Place the exhaust manifold gasket in position.
   (2) Install the exhaust manifold, tighten it to the specified torque.
   Exhaust manifold tightening torque:
   2.2~2.7m·kg(16~20ft·lb)

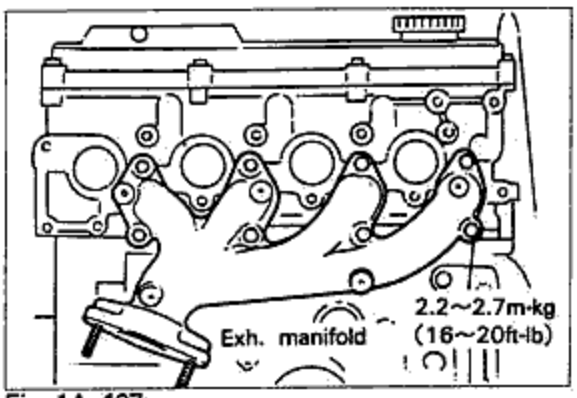

Fig. 1A-127

2. Assembling the intake manifold
   (1) Be sure there is no dirt, etc. on the connecting section of manifold.
   (2) Install the intake manifold and gasket, and tighten it to the specified torque, then install the heat insulator to the exhaust manifold.
   Intake manifold tightening torque:
   1.6~2.3m·kg(12~17ft·lb)

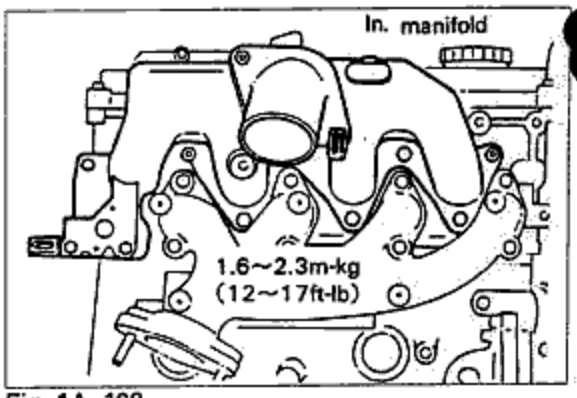

Fig. 1A-128

◈ OIL COOLER, OIL FILTER

1. Apply a coating of engine oil to the shaded area in the figure.

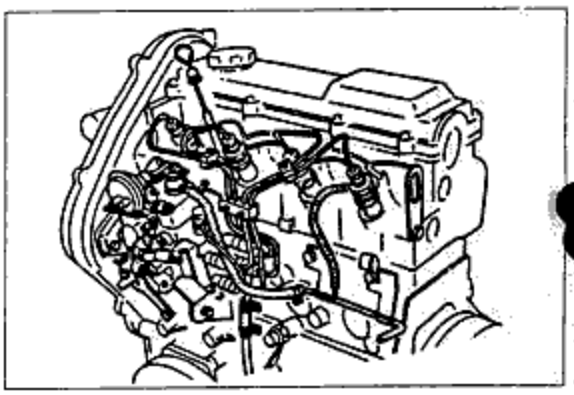
Fig. 1A-129

2. Install three new "O" rings, and apply a coating of engine oil to them.
3. Install the oil cooler assembly, and tighten it to the specified torque.
   Oil cooler assembly tightening torque:
   M10(Bigger):3.2~4.7m·kg(23~34ft·lb)
   M6(Smaller):0.7~1.0m·kg(5~7ft·lb)

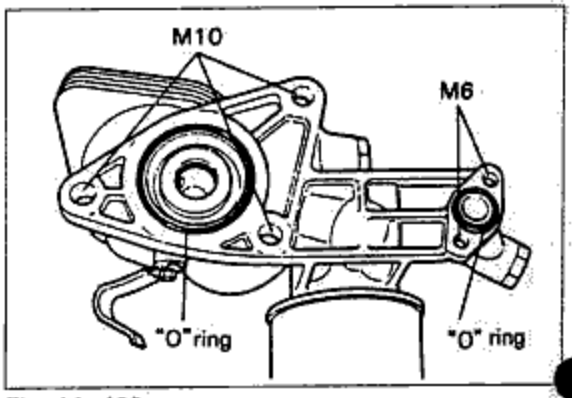

Fig. 1A-130

4. Replace the oil filter.

Cautions;

- When the oil filter is installed apply a coating of engine oil to the filter's O-ring.
- After completely tightening the oil filter with one hand, then use a wrench to tighten it 1/4 turn further.
- The wrench used to further tighten the filter in the step above must be a band-type wrench which will not damage the filter.

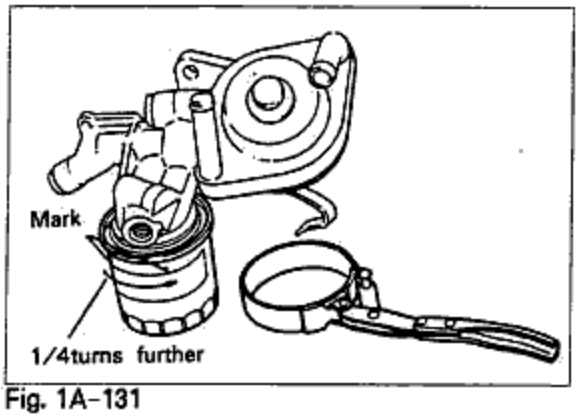

Fig. 1A-131

ALTERNATOR AND VACUUM PUMP ASSEMBLY

1. Install the alternator bracket, and tighten it to the specified torque.
   Alternator bracket tightening torque:
   3.2~4.7m·kg(23~34ft·lb)

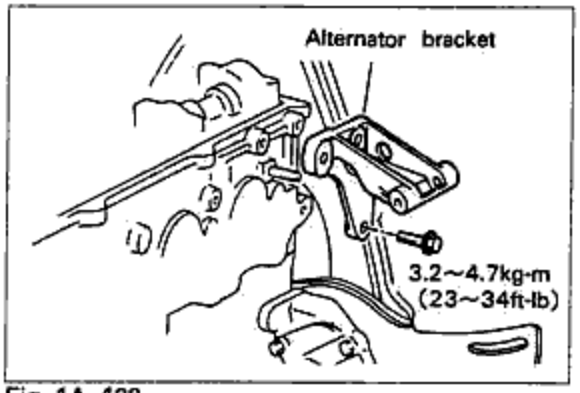

Fig. 1A-132

2. Install the alternator and vacuum pump assembly.
3. Install the vacuum pump oil hose.

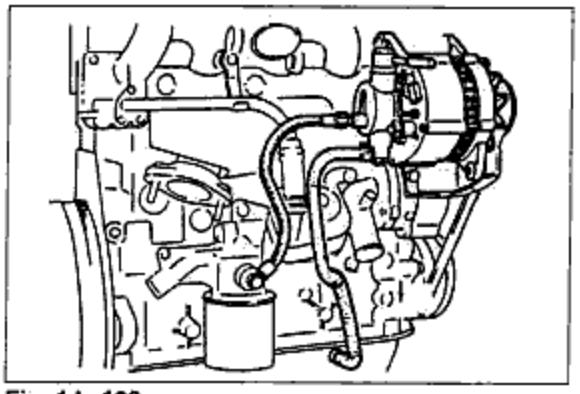
Fig. 1A-133

ADJUSTMENT OF VALVE CLEARANCE

1. Measurement of valve clearance.
   (1) Position No.1 cylinder to the compression top dead center.
   (2) Measure the valve clearance of No.1 and No.2 of the intake side and No.1 and No.3 of the exhaust side.
   (3) Turn the crankshaft one turn(forward direction), and then measure the rest of the valve clearance.

Valve clearance:

Engine warm condition:
Intake:0.30mm(0.012in)
Exhaust:0.40mm(0.016in)

Engine cold condition:
Intake:0.20~0.30mm(0.008~0.012in)
Exhaust:0.30~0.40mm(0.012~0.016in)

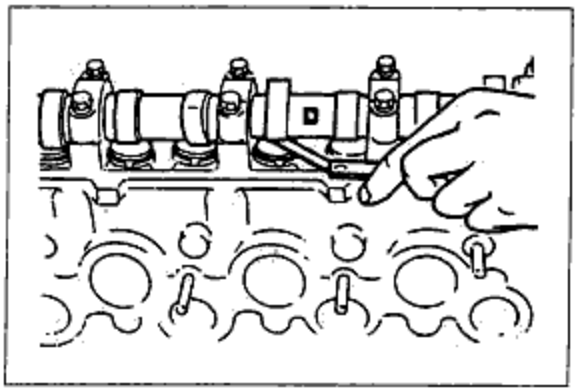
Fig. 1A-134

2. Adjust the valve clearances by following the procedures below if they are not within the standard.
   (1) Face the intake cam straight upward.
   (2) Move the tappet so that its notch is at the manifold side, so that access to the adjusting disc is easy.
   (3) Using the tappet holder (49 S120 220), press the tappet down to the position where the adjusting disc becomes accessible.
   (4) Using a small screw driver or similar tool, take out the adjusting disc.
   (5) Select an appropriate disc depending on the valve clearance measured. Install it and check the clearance again.

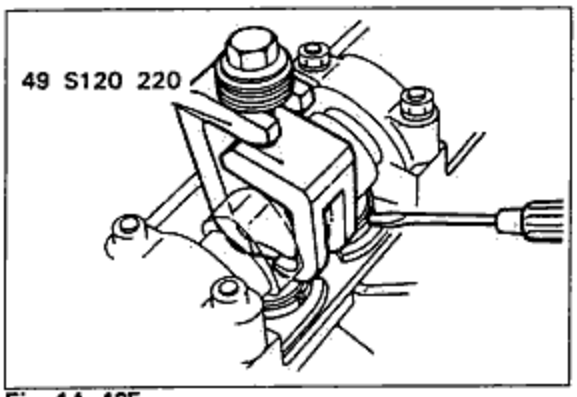

Fig. 1A-135

NOTES

(a) The number marked on the disc indicates its thickness.
Example; 3825 means 3.825mm (0.1056in)

(b) In case of valve clearance being larger than standard value, use thicker one than the disc which is assembled as much as the difference between actual measured values and standard values.

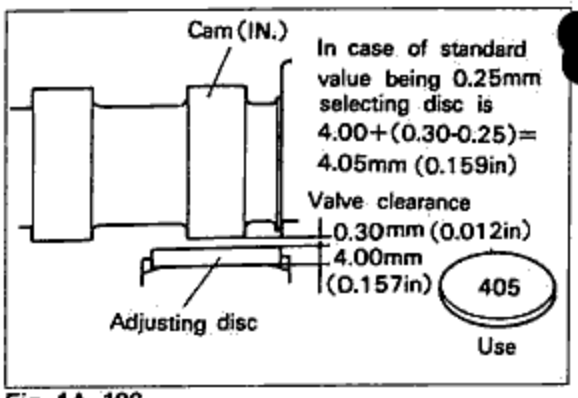

Fig. 1A-136

3. Cylinder head cover
   (1) Place the gasket in position on the cylinder head cover assembly.
   (2) Apply a coating sealant to the shaded areas shown in the figure.
   (3) Install the cylinder head cover, and tighten it to the specified torque.
   Cylinder head cover tightening torque:
   0.7~1.0m·kg(5~7ft·lb)

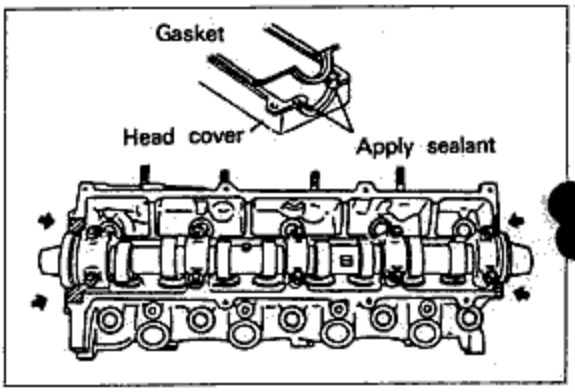

Fig. 1A-137

Caution:
Don't give impact to cover.

(4) Install the blow-by hose.

ENGINE(GASOLINE) 1B

- STRUCTURAL VIEW ····· 1B—2
- SPECIFICATIONS ····· 1B—3
- TROUBLESHOOTING GUIDE ····· 1B—4
- DISASSEMBLY OF ENGINE ····· 1B—6
  - DISASSEMBLY RELATED TO THE TIMING MECHANISM ····· 1B—7
  - DISASSEMBLY RELATED TO THE CYLINDER HEAD ····· 1B—8
  - PARTS RELATED TO THE LUBRICATION SYSTEM AND THE FLYWHEEL ····· 1B—9
  - PARTS RELATED TO THE CRANKSHAFTS & PISTON ASSEMBLY ····· 1B—10
  - DISASSEMBLY PROCEDURES ····· 1B—11
- INSPECTION AND REPAIR ····· 1B—14
  - PREPARATION ····· 1B—14
  - CYLINDER HEAD(COMPLETE) ····· 1B—14
  - CAMSHAFT ASSEMBLY ····· 1B—18
  - ROCKER ARM AND ROCKER ARM SHAFT ··· 1B—19
  - CYLINDER BLOCK ····· 1B—19
  - PISTON AND PISTON RING ····· 1B—21
  - CONNECTING RODS ····· 1B—22
  - CRANKSHAFT ····· 1B—22
  - FLYWHEEL ASSEMBLY ····· 1B—23
  - TIMING BELT ····· 1B—23
  - TENSIONER ····· 1B—24
  - TIMING BELT CRANKSHAFT PULLEY AND CAMSHAFT PULLEY ····· 1B—24
  - TIMING BELT COVERS (LOWER AND UPPER) ····· 1B—24
- ASSEMBLY OF ENGINE ····· 1B—25
  - PISTONS AND CONNECTING RODS ····· 1B—25
  - CRANKSHAFT ASSEMBLY ····· 1B—27
  - REAR COVER ASSEMBLY AND END PLATE 1B—30
  - OIL PUMP BODY ASSEMBLY ····· 1B—31
  - OIL STRAINER AND OIL PAN ····· 1B—31
  - FLYWHEEL ASSEMBLY, CLUTCH DISC AND CLUTCH COVER ····· 1B—32
  - ENGINE BRACKET NO. 3 AND WATER PUMP (COMPLETE) ····· 1B—33
  - CYLINDER HEAD AND ROCKER SHAFT ASSEMBLY ····· 1B—33
  - FRONT HOUSING ASSEMBLY ····· 1B—35
  - TIMING BELT MECHANISM ····· 1B—36
  - FUEL PUMP ····· 1B—39
  - VALVE CLEARANCE ADJUSTMENT ····· 1B—39
  - CYLINDER HEAD COVER(COMPLETE), FILLER, CAP, AND VENTILATION HOSE ····· 1B—40
  - OIL FILTER ····· 1B—40
  - ENGINE HANGERS ····· 1B—41
  - THERMOSTAT AND COOLANT OUTLET ····· 1B—41
  - DISTRIBUTOR ····· 1B—41
  - SPARK PLUGS AND SPARK PLUG CABLES ··· 1B—42
  - INLET MANIFOLD(COMPLETE) ····· 1B—42
  - WATER BY-PASS HOSE ASSEMBLY ····· 1B—42
  - INLET PIPE ASSEMBLY AND LOWER WATER HOSE ····· 1B—42
  - EXHAUST MANIFOLD AND AIR INJECTION PIPES ····· 1B—43
  - ALTERNATOR STRAP, BRACKET AND ALTERANATOR ····· 1B—43
  - ENGINE MOUNTS ····· 1B—44

⊠ STRUCTURAL VIEW

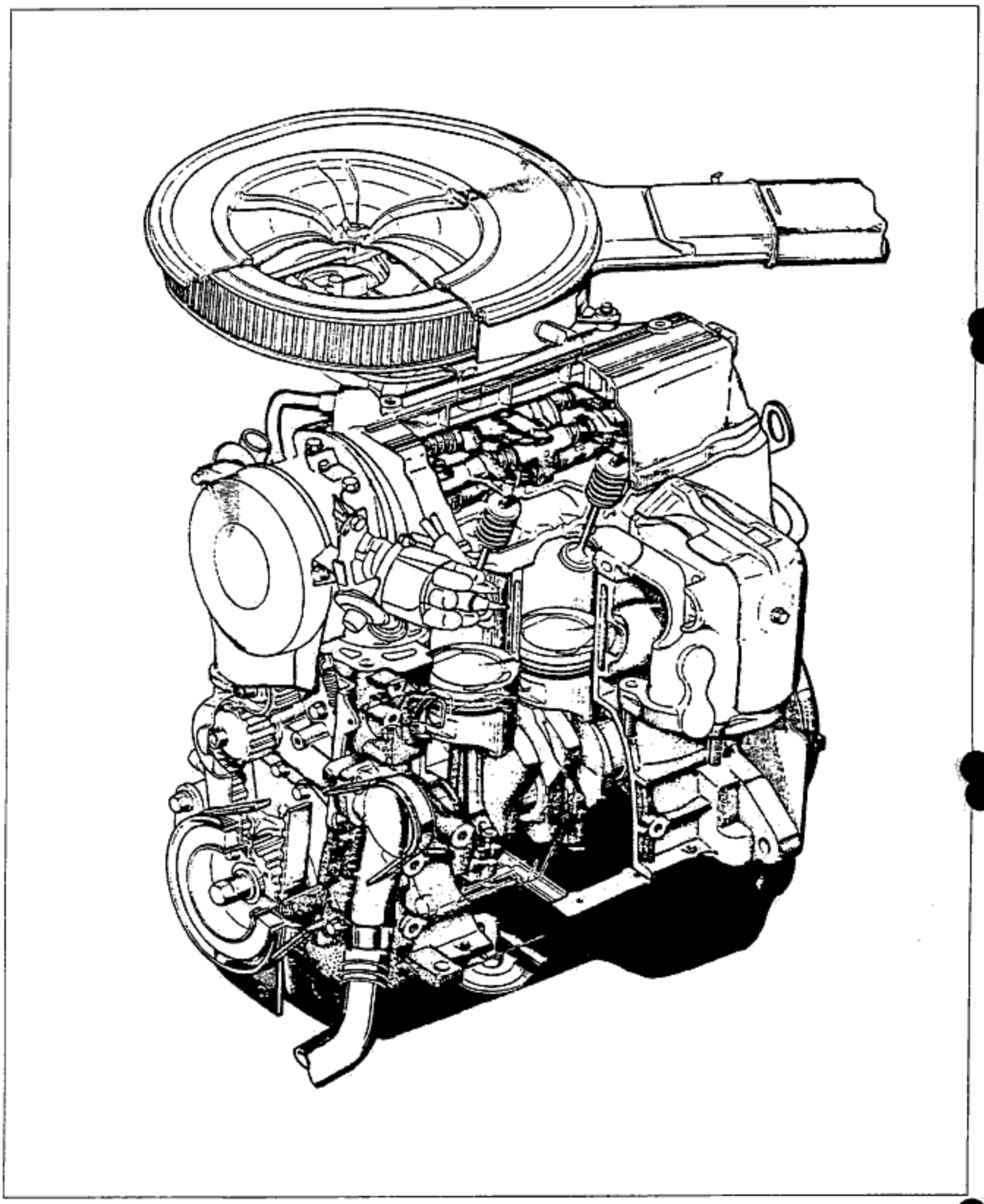

Fig. 1B-1

SPECIFICATIONS

Item \ Engine			F8
Type			Gasoline, 4-cycle
Cylinder arrangement and number			In-line, 4 cylinders
Combustion chamber			Multispherical
Valve system			OHC–belt driven 8 valves
Displacement cc(cu in)			1,789
Bore and stroke mm(in)			86.0 × 77.0 (3.386 × 3.031)
Compression ratio			8.6
Compression pressure kPa(kg/cm², ps)-rpm			1,128 (11.5, 163.3) – 270
Valve timing	IN	Open BTDC	19°
		Close ABDC	51°
	EX	Open BBDC	57°
		Close ATDC	13°
Valve clearance mm(in)		IN	0.30(0.012)
		EX	0.30(0.012)
Idle speed rpm		MTX	750 $^{+50}_{-0}$
Ignition timing		BTDC	6°
Firing order			1 – 3 – 4 – 2
Maximum power ps-rpm			85 – 5,500
Maximum torque m·kg(ft·lb)-rpm			13.4(96.7) – 3,000

⊠ TROUBLESHOOTING GUIDE

Problem	Possible Cause	Correction
Insufficient power	**Insufficient compression**	
	Improper valve clearance	Adjust
	Compression leakage from valve seat	Repair (grind the valve)
	Seized valve stem	Replace
	Weak or broken valve spring	Replace
	Burned cylinder head gasket	Replace
	Cracked or distorted cylinder head	Replace or repair
	Sticking, damaged, or worn piston ring	Replace
	Cracked or worn piston	Replace
	Malfunction of fuel system	Refer to section 4B
Excessive oil consumption	**Oil working up**	
	Worn or sticking piston ring or piston ring groove	Replace
	Worn piston or cylinder	Replace
	Oil working down	
	Worn valve seal	Replace
	Worn valve stem or guide	Replace
	Oil leakage	Refer to section 2B
Difficult starting	**Malfunction of engine—related components**	
	Burned valve	Replace
	Worn piston, piston ring, or cylinder	Replace
	Burned cylinder head gasket	Replace
	Malfunction of fuel system	Refer to section 4B
Abnormal combustion	**Malfunction of engine—related components**	
	Improper valve clearance	Adjust
	Sticking or burned valve	Replace
	Weak or broken valve spring	Replace
	Carbon accumulation in combustion chamber	Eliminate the carbon
	Malfunction of fuel system	Refer to section 4B
Poor idling	**Malfunction of engine—related components**	
	Poor valve-to-valve seat contact	Repair or replace
	Improper valve clearance	Adjust
	Failed cylinder head gasket	Replace
	Malfunction of fuel system	Refer to section 4B
Engine noise	**Crankshaft or bearing related parts**	
	Excessive main bearing oil clearance	Replace or repair
	Excessive crankshaft end play	Replace or repair
	Main bearing seized or heat—damaged	Replace
	Excessive connecting rod bearing oil clearance	Replace or repair
	Connecting rod bearing seized or heat—damaged	Replace

Problem	Possible Cause	Correction
Engine noise	**Piston–related parts**	
	Worn cylinder	Replace
	Worn piston or piston pin	Replace
	Seized piston	Replace
	Damaged piston ring	Replace
	Bent connecting rod	Replace
	Valves or timing related parts	
	Excessive valve clearance	Adjust
	Broken valve spring	Replace
	Excessive clearance between valve stem and guide	Replace
	Insufficient lubrication of rocker arm	Replace
	Others	
	Malfunction of water pump bearing	Replace
	Improper V–ribbed belt tension	Adjust
	Malfunction of alternator bearing	Replace
	Exhaust gas leakage	Repair
	Malfunction of timing belt tensioner	Replace

⊠ DISASSEMBLY OF ENGINE

After separating the transaxle from the engine, remove each parts in the order shown in the figure 1B-2 to 1B-6.

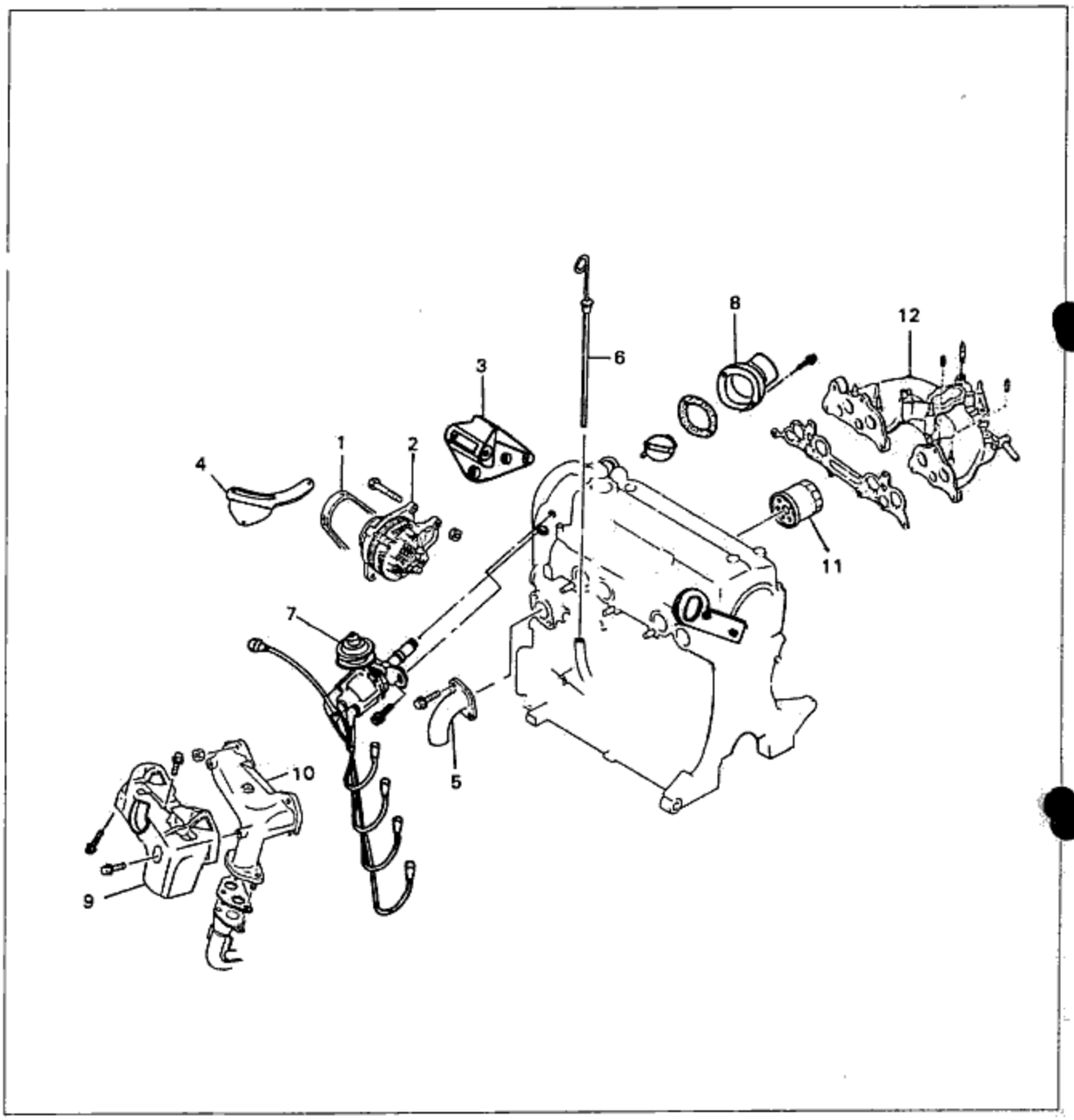

Fig. 1B-2

1. V-belt
2. Alternator
3. Alternator bracket
4. Alternator strap & bracket
5. Inlet pipe Ass'y & water hose(lower)
6. Oil level gauge
7. Spark plug cable & distributor
8. Coolant outlet & thermostat
9. Insulator
10. Exhaust manifold
11. Oil fliter
12. Intake manifold

◈ DISASSEMBLY RELATED TO THE TIMING MECHANISM

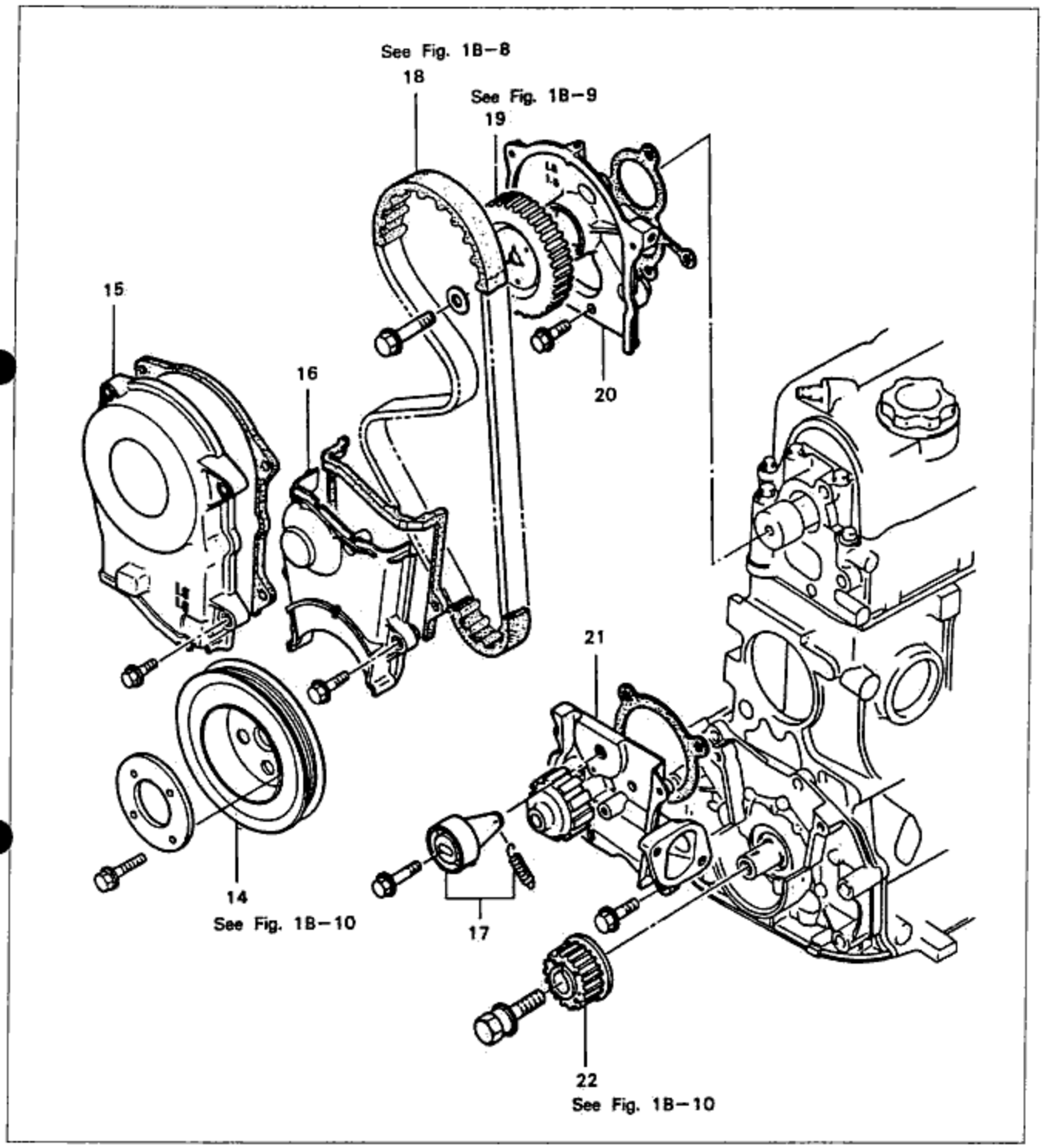

Fig. 1B-3

14. Crankshaft pully
15. timing belt cover(upper)
16. Timing belt cover(lower)
17. Tensioner spring & tensioner
18. Timing belt
19. Camshaft pully
20. Front housing Ass'y
21. Water pump (complete)
22. Timing belt crankshaft pully

◈ DISASSEMBLY RELATED TO THE CYLINDER HEAD

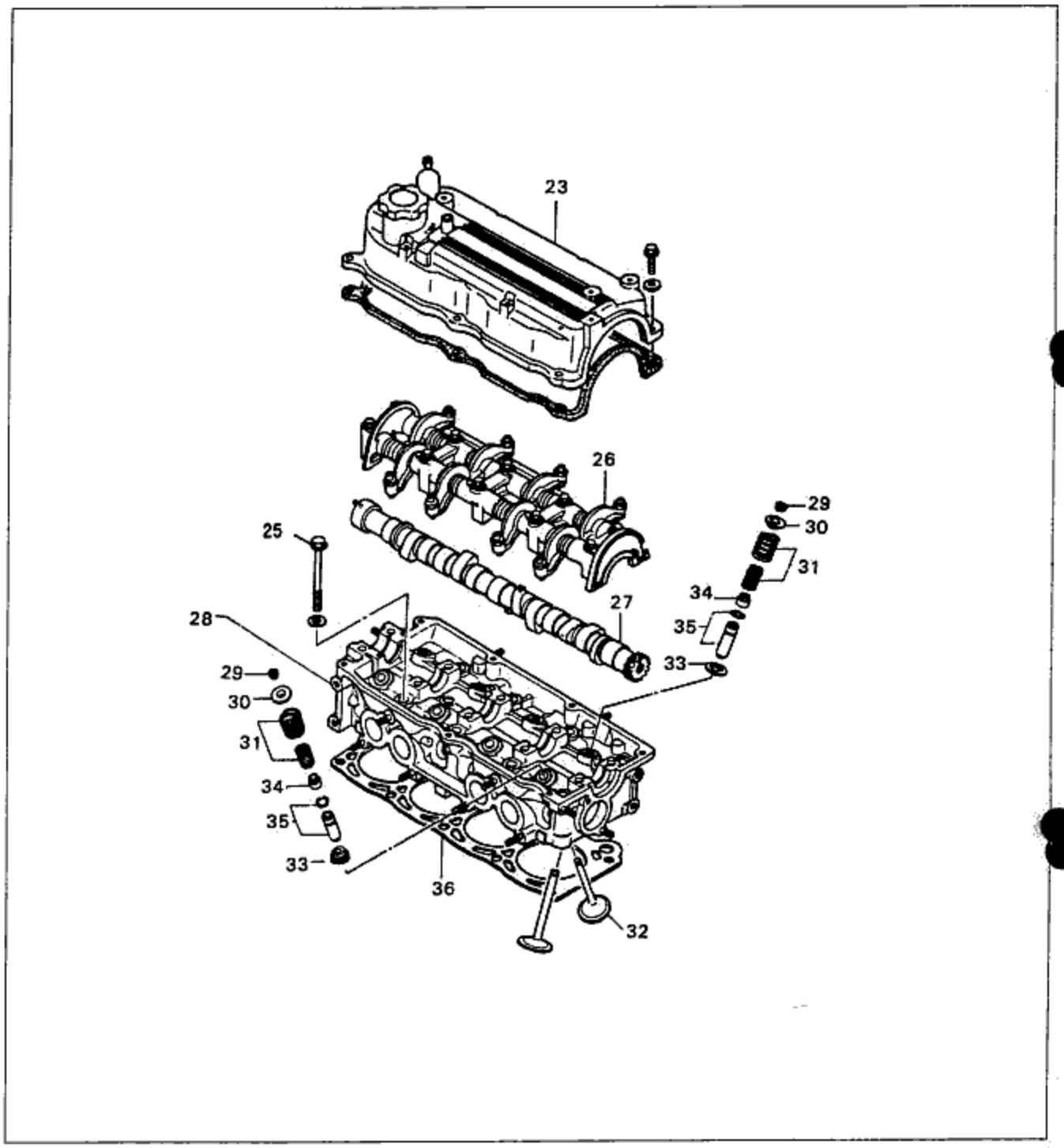

Fig. 1B-4

23. Cylinder head cover(complete)
25. Cylinder head tension bolt
26. Rocker shaft equipment
27. Camshaft Ass'y
28. Cylinder head(complete)
29. Valve cotter pins
30. Valve springs seats(upper)
31. Valve springs(inner and outer)
32. Valves
33. Valve spring seats(lower)
34. Valve seals
35. Valve guides & clips
36. Cylinder head gasket

◈ PARTS RELATED TO THE LUBRICATION SYSTEM AND THE FLYWHEEL

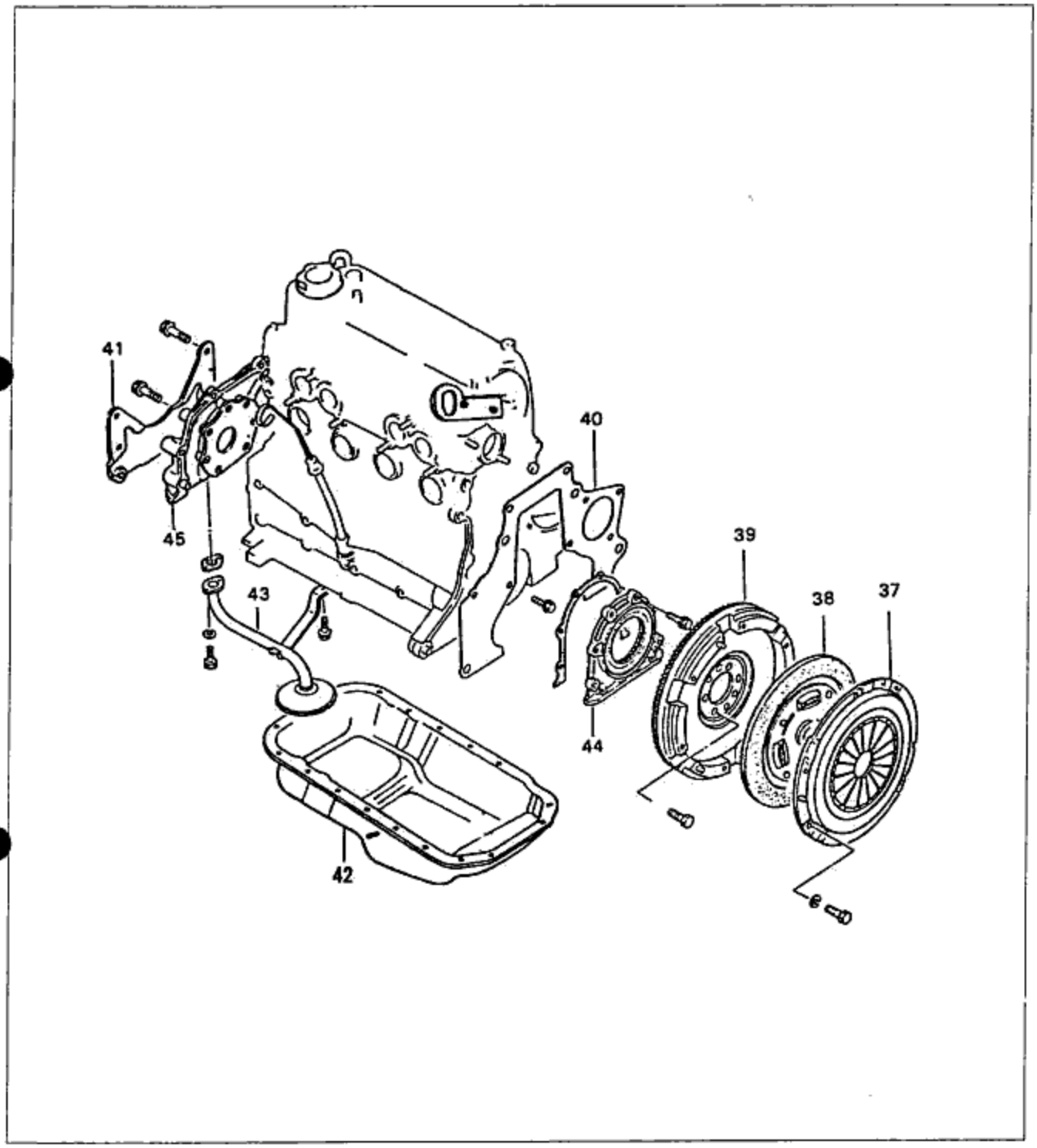

Fig. 1B-5

37. Clutch cover Ass'y
38. Clutch
39. Flywheel Ass'y
40. End plate
41. Engine bracket No.3
42. Oil pan
43. Oil strainer
44. Rear cover Ass'y
45. Oil pump body Ass'y

◈ PARTS RELATED TO THE CRANKSHAFT & PISTON ASSEMBLY

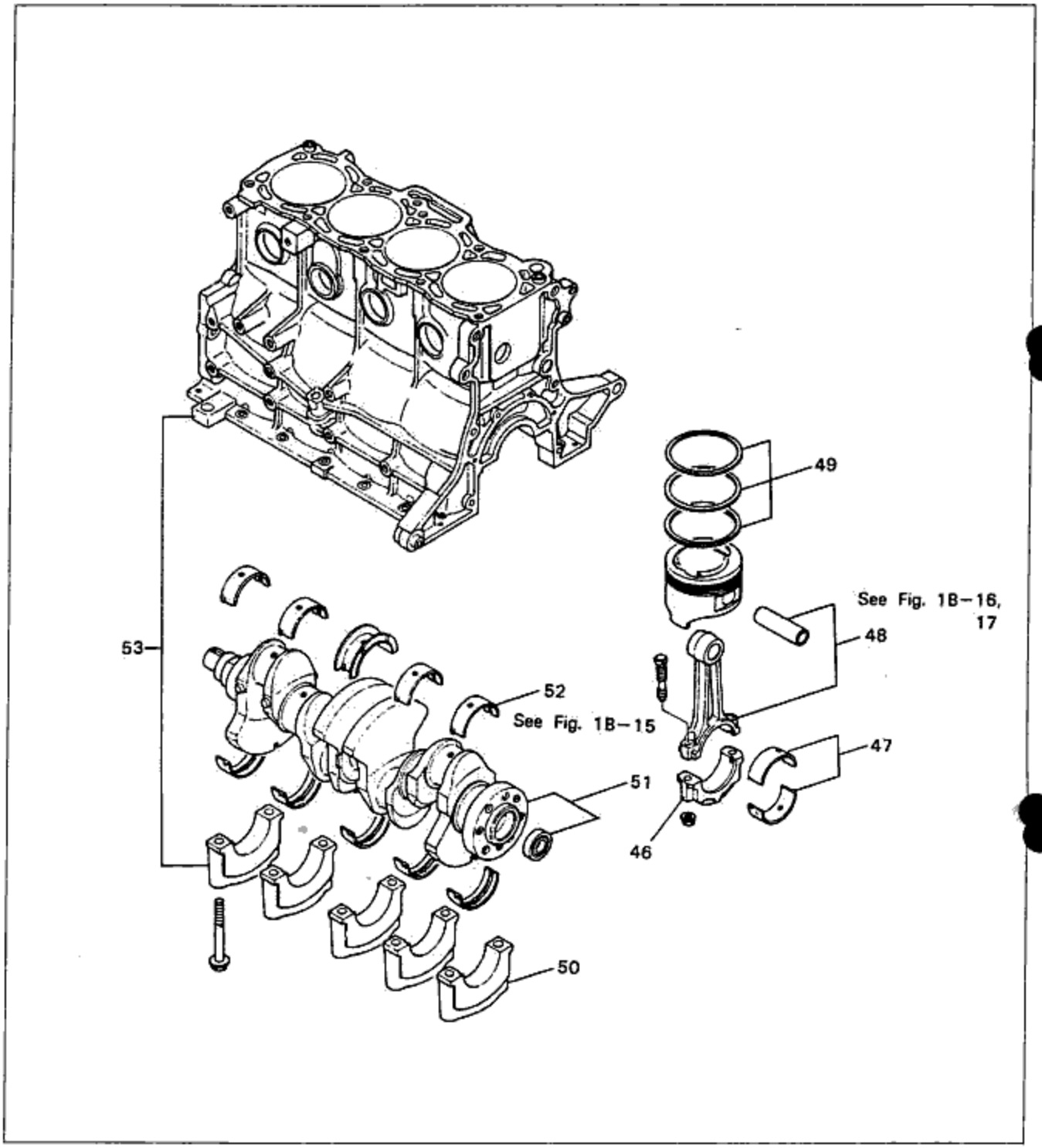

Fig. 1B-6

46. Connecting rod caps
47. Connecting rod bearings
48. Connecting rods & pistons
49. Piston rings
50. Main bearing cap
51. Crankshaft & pilot bearing
52. Main bearing
53. Cylinder block Ass'y

NOTES ABOUT DISASSEMBLY

(1) Inspect each part individually during disassembly for the way it was assembled, and for deformation, wear, and damage.
(2) Mark or otherwise indicate parts which are similar (pistons, piston rings, connecting rods, valve springs, etc.) so that they can be reinstalled in the cylinder they were removed from.
(3) Be sure all disassembled parts are placed so that they are in order and for the correct cylinder.
(4) After steam-cleaning the parts, use compressed air to blow off any remanining water(especially from pilot bearing).

◆ DISASSEMBLY PROCEDURES

ENGINE HANGER

1. After separating all connections, install the engine onto the engine hanger(49 G030 005) attached to the engine stand(49 0107 680A).
2. Drain the engine oil.

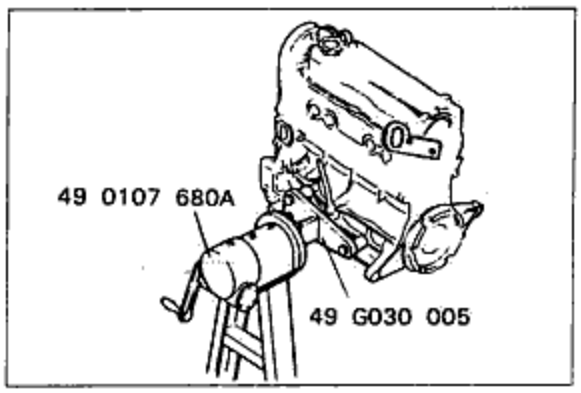

Fig. 1B-7

TIMING BELT

1. Remove the tensioner spring after loosening the tensioner lock bolt.
2. Remove the timing belt.

Caution:
- Use chalk to mark forward movement direction of the timing belt. This is to prevent incorrect installation if it is used again.

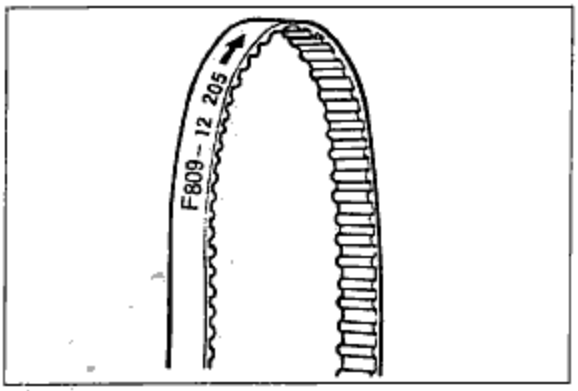

Fig. 1B-8

CAMSHAFT PULLEY

1. As shown in the figure, remove the pulley, using a screwdriver or similar tool to prevent it from turning.

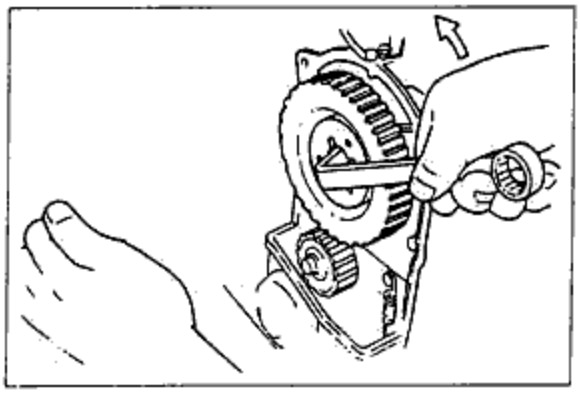
Fig. 1B-9

CRANKSHAFT PULLEY AND TIMING BELT CRANKSHAFT PULLEY

Connect the ring gear brake(49 E301 060) to the flywheel assembly, and then remove the crankshaft pulley and the timing belt crankshaft pulley.

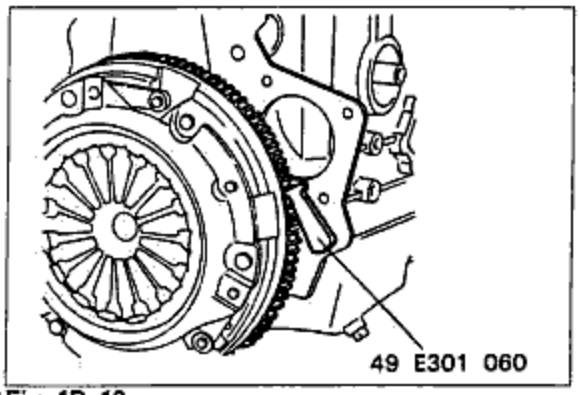

Fig. 1B-10

ROCKER SHAFT EQUIPMENT

Loosen the rocker shaft equipment bolts in the numbered order shown in the figure. Loosen them each a little at a time, in order.

Caution:

Do not remove the bolts. Remove them together with the rocker shaft equipment.

Do not mix up the various parts of the rocker shaft equipment during disassembly.

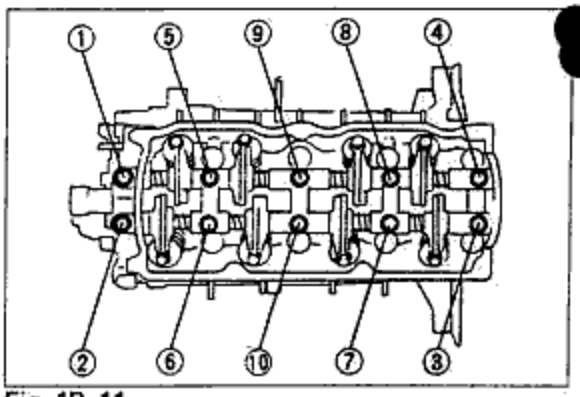

Fig. 1B-11

CYLINDER HEAD (COMPLETE)

Loosen the cylinder head(retaining) bolts in the numbered order shown in the figure. Loosen them each a little at a time, in order.

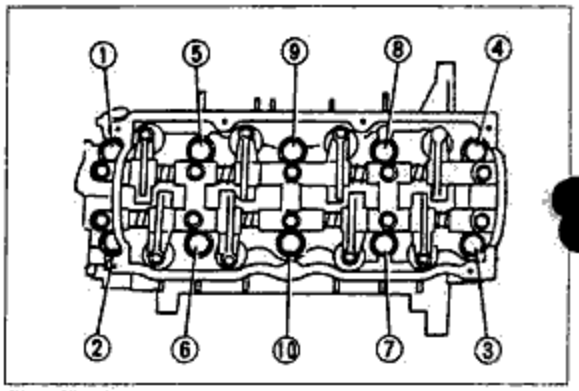

Fig. 1B-12

VALVES

1. Remove the valves from the cylinder head by using the valve spring lifter & pivot (49 0636 100A & 49 G030 222).
2. While removing the valve guides & clips and the valve seals, inspect and, if necessary, repair them. (See Fig. 1B-20)

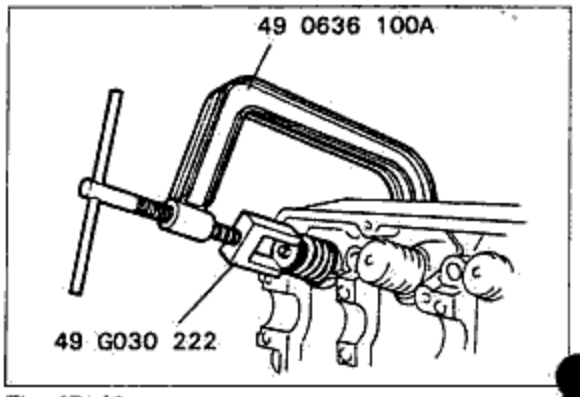

Fig. 1B-13

CLUTCH COVER ASSEMBLY AND FLYWHEEL ASSEMBLY

Remove the clutch cover assembly and flywheel assembly (or drive plate assembly) by using the ring gear brake(49 E301 060).

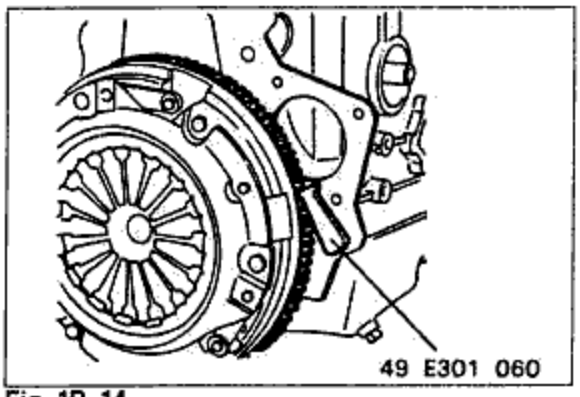

Fig. 1B-14

PILOT BEARING

Remove the pilot bearing from the crankshaft by using the needle bearing puller(49 1285 071).

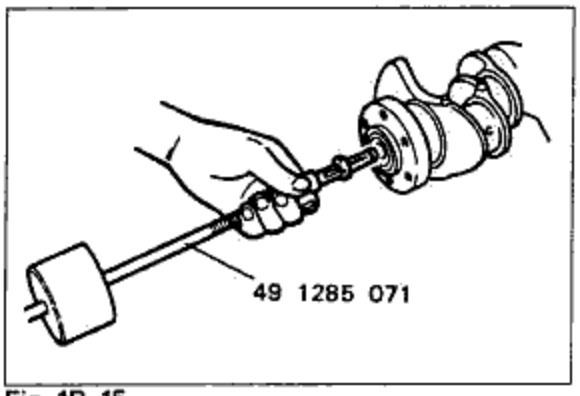

Fig. 1B-15

PISTONS AND CONNECTING RODS

1. Before disassembling the pistons and connecting rods, check the oscillation torque of the connecting rods.
2. As shown in the figure, check to be sure that the large end of each connecting rod descends by the free weight of the connecting rod when the large end is raised all the way.
3. If not, replace the piston and the piston pin.

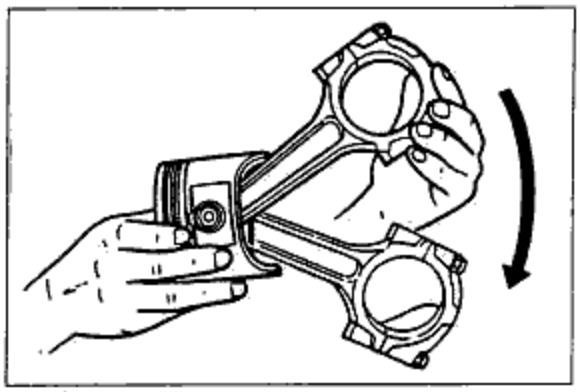

Fig. 1B-16

4. Remove the piston pin by using the piston pin setting tool(49 G030 040).

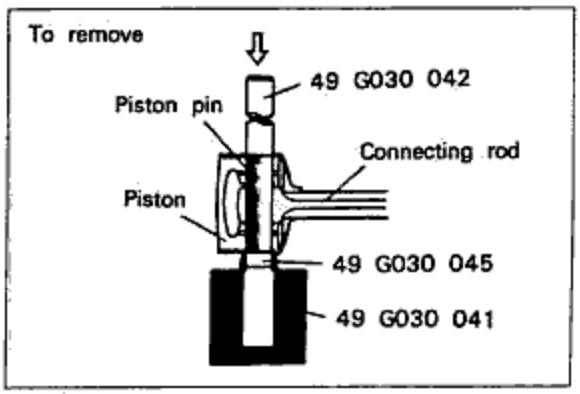

Fig. 1B-17

INSPECTION AND REPAIR

PREPARATION

1. Clean all parts, being sure to remove all gasket fragments, dirt, oil or grease, carbon, moisture residue, and other foreign materials.
2. Inspection and repair must be done in the specified order.

Caution;

- **Do not damage the joints or friction surfaces of aluminum alloy components(such as the cylinder head or pistons).**

CYLINDER HEAD(COMPLETE)

1. Inspection and repair of cylinder head
   (1) Inspect the cylinder head for damage, cracks, and leakage of water and oil. Replace the cylinder head if necessary.
   (2) Measure the cylinder head distortion in the six directions shown in the figure.
   Distortion:0.15mm(0.006 in) max

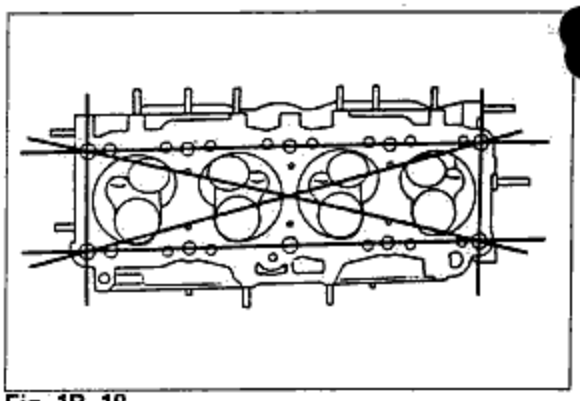

Fig. 1B-18

Caution;

- **Before grinding the cylinder head, check the following and repair or replace the cylinder head as necessary.**
  Sinking of valve seats
  Damage of manifold contact surface
  Camshaff oil clearances

   (3) If the cylinder head distortion exceeds specification, grind the cylinder head surface.
   If the cylinder head height is not within specification, replace it.
   Height:91.95~92.05mm(3.620~3.624in)
   Grinding:0.20mm(0.008in)

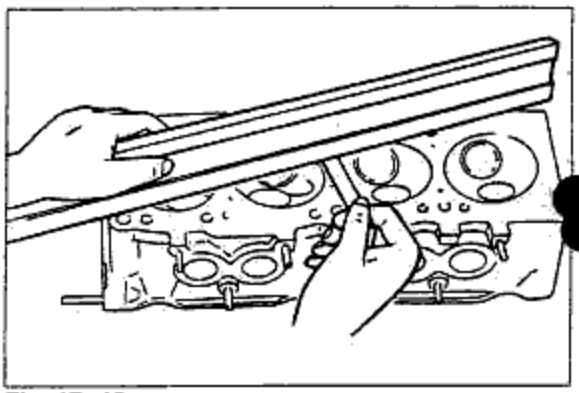

Fig. 1B-19

2. Inspection and repair of valves
   (1) Check the valve stem for wear, damage, bending, or dented stem ends, and replace if necessary.
   (2) Check for roughness or damage on the valve faces. If the problem is slight, repair by using a valve refacer.
   (3) Check the thickness of the valve head.
   If it exceeds the use limit, replace.

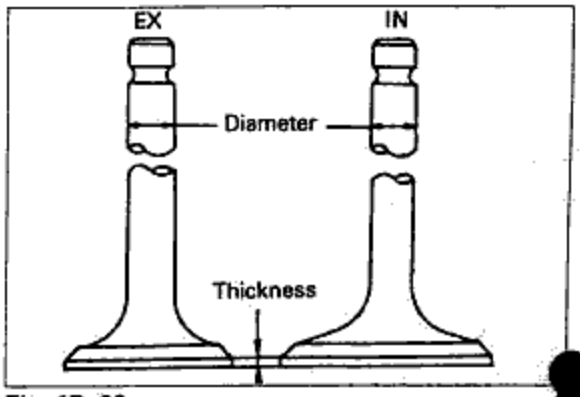

Fig. 1B-20

Valve stem diameter limit:

Intake	7.980mm(0.3142in)
Exhaust	7.975mm(0.3140in)

Valve head thickness limit:

Intake	0.5mm(0.020in)
Exhaust	1.0mm(0.039in)

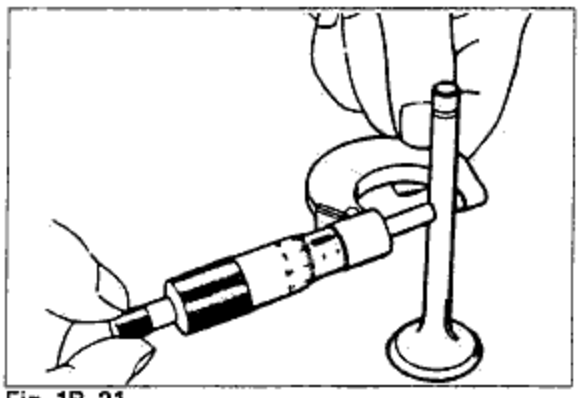

Fig. 1B-21

3. Inspection and repair of valve guides

(1) Measure the difference between the inner diameter of each valve guide and the diamter of the corresponding valve stem.
Replace the valve guide if the measurement exceeds the limit.
Gap limit: 0.20mm(0.008in)

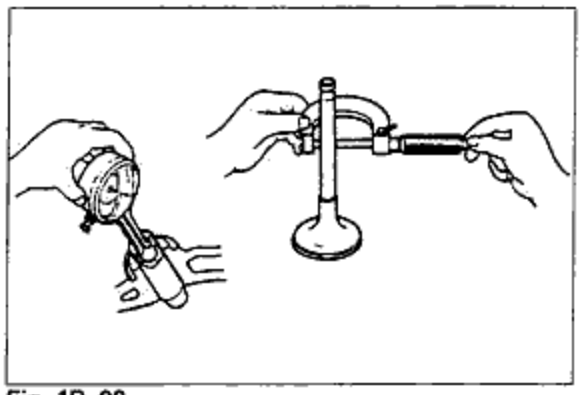

Fig. 1B-22

NOTE

- **Measurement can also be made by the simple method in (2).**

(2) Measure the play of the valves.

Cautions:

- **Measure after taking the valves out of the valve seats.**
- **Measure at a point close to the valve guide.**

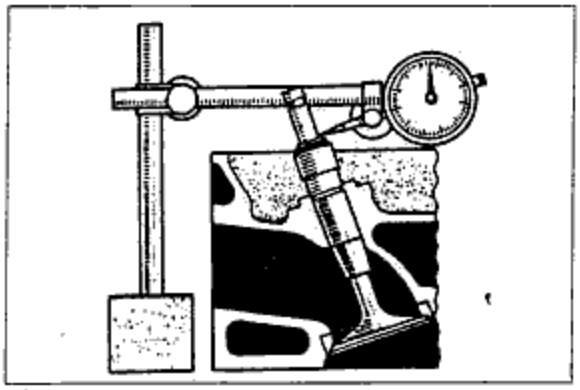

Fig. 1B-23

4. Replacement of valve guide

(1) Removal

① Use a pair of pliers to pull the valve seal from the valve guide.

② Remove the guide from the side opposite to the combustion chamber by using the valve guide installer(49 0221 251A).

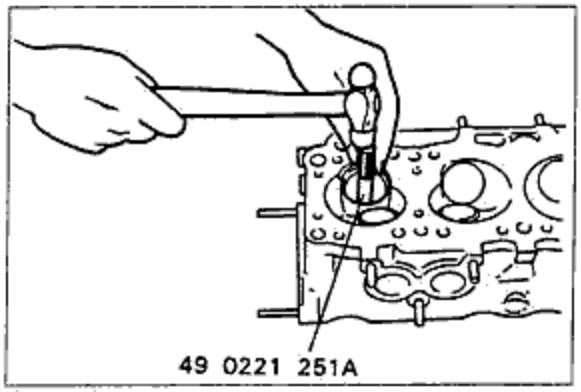

Fig. 1B-24

(2) Installation

Fit the clip onto the valve guide, and then use the valve guide installer (49 0221 251A) to tap the valve guide in from the side opposite to the combustion chamber until the clip barely contacts the cylinder head (19.1~19.6mm, 0.752~0.772in) from the seat of the valve spring to the end of the valve guide(Dimension A).

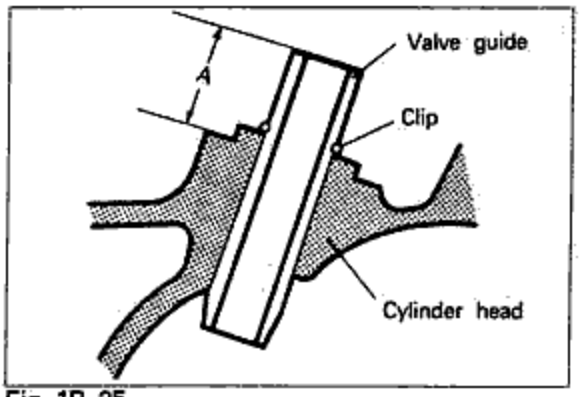

Fig. 1B-25

Cautions:

- If the valve guide is replaced, check the gap between the valve and guide once again.
- The valve seal should be installed after inspection and repair of the valve seat.
- Although the shapes of the inlet and exhaust valve guides are different, during replacement, use the exhaust valve guide on both sides.

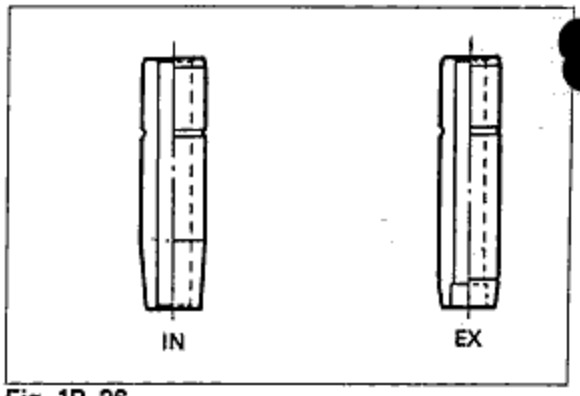

Fig. 1B-26

5. Inspection of valve spring

(1) Inspect each valve spring for cracks or damage. Replace if necessary.

(2) Check the free length and angle. Replace if necessary.

Free length limit:

Outer:	**52mm(2.05in)**
Inner:	**44mm(1.732in)**
Out-of-square max.:	**1.81mm(0.071in)**

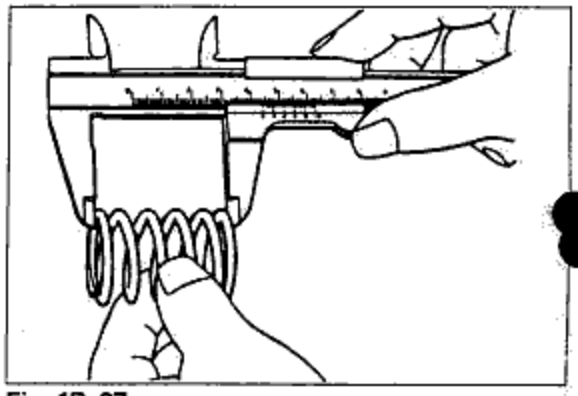
Fig. 1B-27

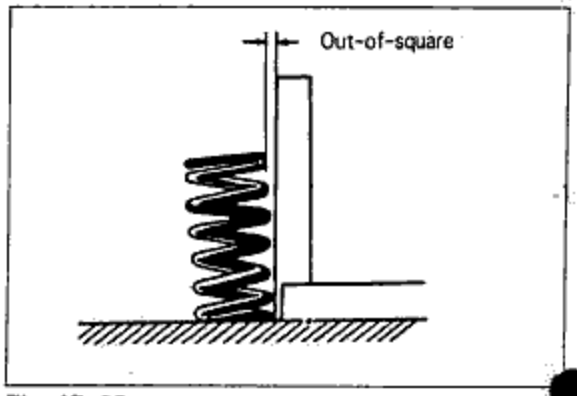

Fig. 1B-28

6. Inspection and repair of valve seat.
   (1) Check for roughness or damage of surface which contacts valve face. If necessary, use a valve seat cutter or valve seat grinder to cut to the specified shape.

Caution:
- **Carefully check the contact surface (with the valve) and the contact width throughout the cutting.**

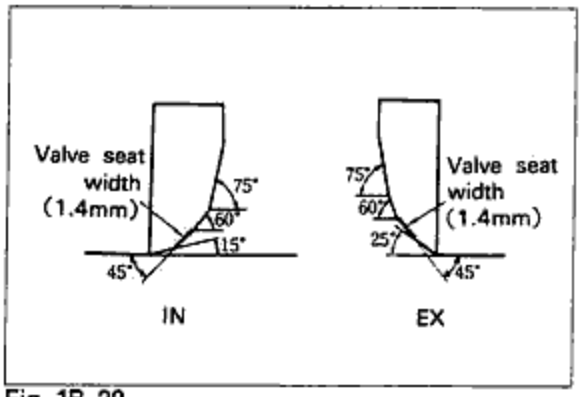

Fig. 1B-29

   (2) Check the surface which contacts the valve. It should be at the center of the valve face.
   (3) Use compound to seat the valve and valve seat.

Caution:
- **Replace the valve seal after the checks in (2) and (3).**

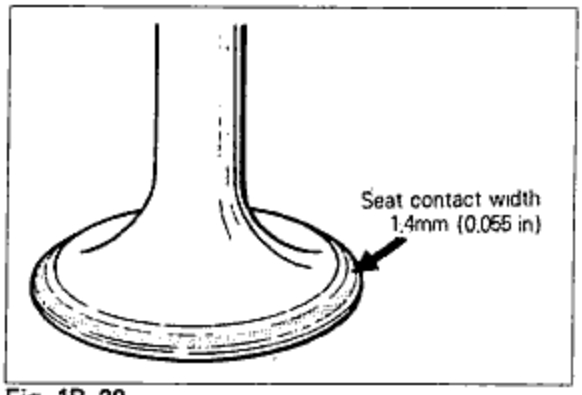

Fig. 1B-30

   (4) Check the shrinkage of the valve seat.
   If the shrinkage is 0.5~1.5mm(0.0196~0.0590in), insert a washer of equivalent thickness into the valve spring seat part.
   If more than 1.5mm(0.0590in), replace the cylinder head.

   "L"(valve seat shrinkage) standard:

Intake:	46.5mm(1.831in)
Exhaust:	46.5mm(1.831in)

   "L" limit

Intake:	48.0mm(1.89in)
Exhaust:	48.0mm(1.89in)

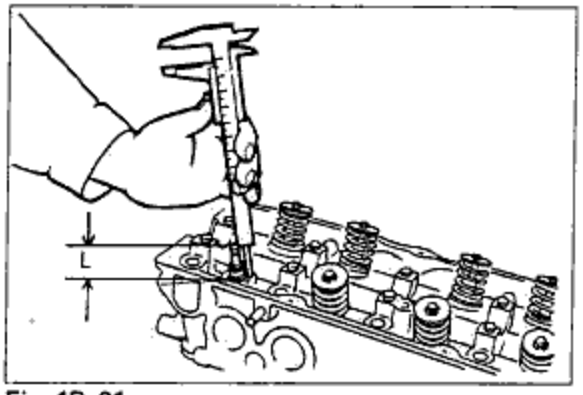

Fig. 1B-31

7. Installation of valve seal
   Install the valve seal onto the valve guide by using the valve seat pusher(49 G030 160).

Caution:
After inspection and repair of the valve seal, be sure to use the special tool for installation. If it is not installed correctly, the oil might work down.

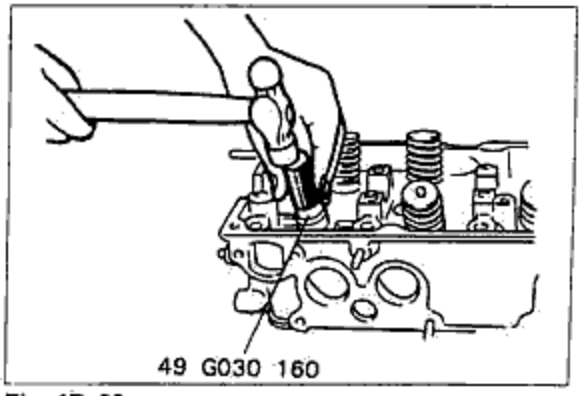

Fig. 1B-32

8. Installation of valve spring
   Install the valve spring, spring seat and coller pins onto the cylinder head by using the valve spring lifter and pivot (49 0636 100A & 49 G030 222).

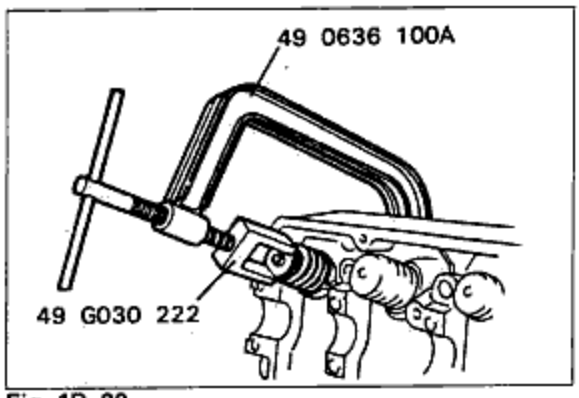

Fig. 1B-33

◈ CAMSHAFT ASSEMBLY

1. Inspect the camshaft for wear and damage. Replace if necessary.

Standard cam lobe height:	
Intake:	38.202mm(1.504in)
Exhaust:	38.202mm(1.504in)
Cam lobe height limit:	
Intake:	38.002mm(1.496in)
Exhaust:	38.002mm(1.496in)

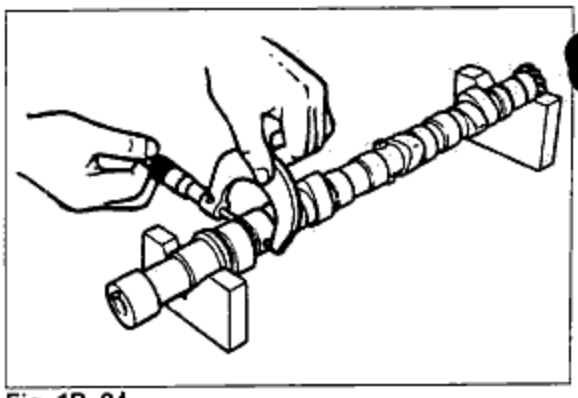
Fig. 1B-34

2. Measure the wear of the journal at the 4 places shown in the figure (directions A and B, 2 places front and rear). Replace the camshaft assembly if necessary.

Journal elliptical limit:	0.05mm(0.0020in)
Standard journal diameter:	
Front & rear:	31.940~31.965mm (1.2575~1.2548in)
Center(3 places):	31.910~31.935mm (1.2563~1.2573in)
Front oil seal sliding surface:	33.961~34.000mm (1.3370~1.338in)

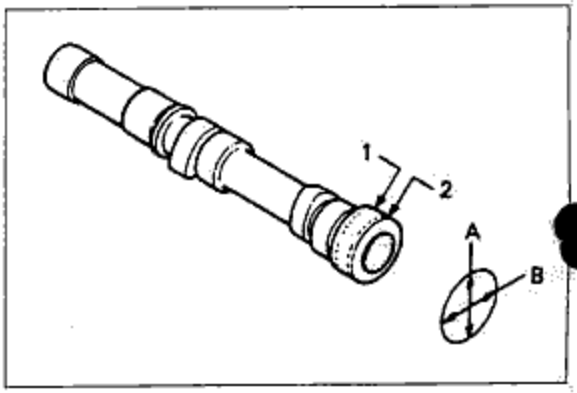

Fig. 1B-35

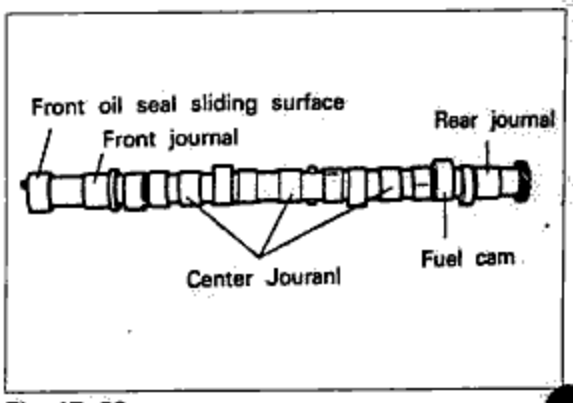

Fig. 1B-36

3. Check the camshaft for deflection.
   Deflection: 0.03mm(0.0012in)

   NOTE:
   Install the front and rear journals on a V-block to make the measurement.

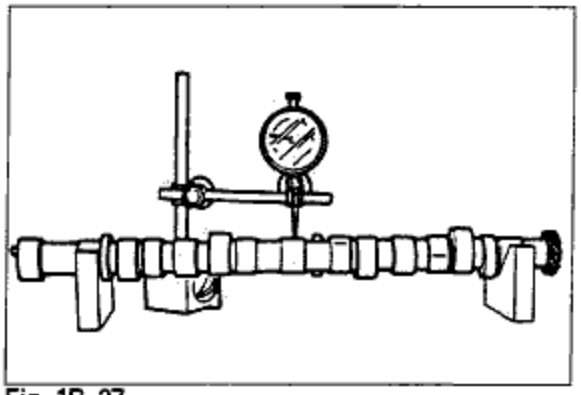

Fig. 1B-37

4. Measure the camshaft end play. If it exceeds the limit, replace the camshaft assembly or the cylinder head(complete).

End play:	**0.20mm(0.008in)**
Standard:	**0.08mm~0.16mm (0.0031~0.0063in)**

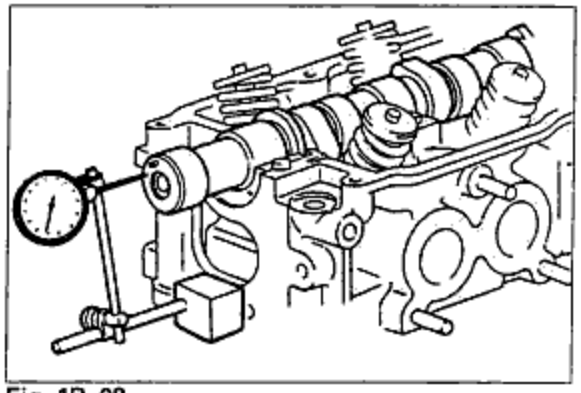

Fig. 1B-38

◈ ROCKER ARM AND ROCKER ARM SHAFT

1. Check for wear or damage to the sliding surface of the rocker arm shaft and the rocker arm. Replace if necessary.
   Clearance between the rocker arm and the rocker arm shaft: 0.10mm(0.004in)

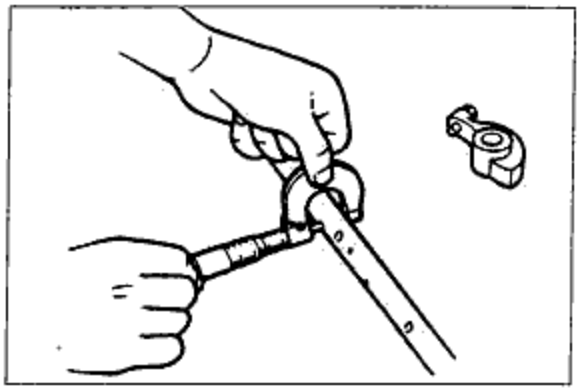

Fig. 1B-39

◈ CYLINDER BLOCK

1. Inspection and repair
   (1) Inspect the cylinder block for dampness, damage, or cracks. Replace if necessary.
   (2) Measure the distortion (degree of flatness) of the top surface of the cylinder block at the 6 places shown in the figure.
   Distortion: 0.15mm(0.006in)

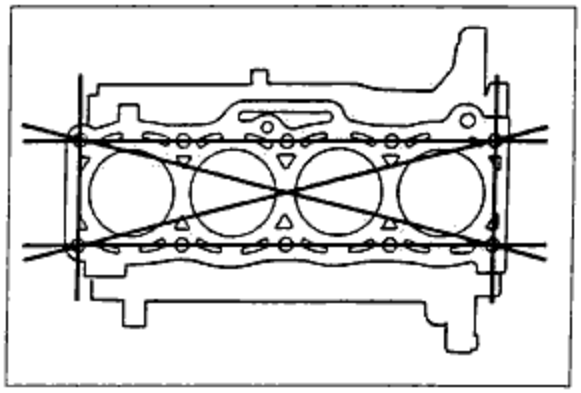

Fig. 1B-40

(3) If the distortion exceeds the limit, repair by grinding, or replace the cylinder block.
(4) Check the cylinder wall for scoring or signs of seizure. If there are any problems, rebore or replace.

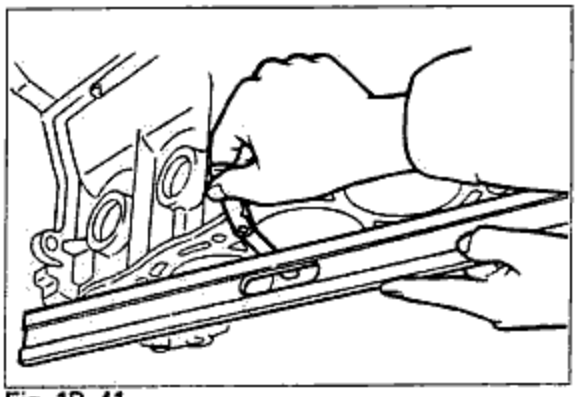

Fig. 1B-41

Measure the cylinder bores in X and Y directions at three levels (A, B, and C) in each cylinder as shown.

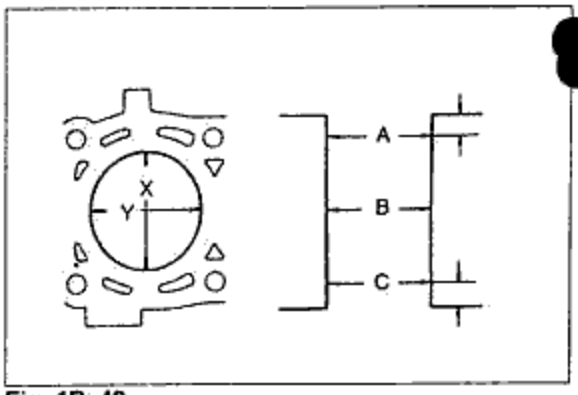

Fig. 1B-42

Cylinder bore
Standard: 86.000 to 86.019mm(3.3858 to 3.3866in)
0.25mm(0.010in) oversize:
86.250 to 86.269mm(3.3957 to 3.3964in)
0.50mm(0.020in) oversize:
86.500 to 86.519mm(3.4055 to 3.4063 in)

Caution:
The boring size should be based on the size of an oversize piston and be the same for all cylinders.
- **If the cylinder bore exceeds the maximum, rebore the cylinder to oversize.**
- **If the difference between measurements A and C exceeds the maximum taper, rebore the cylinder to oversize.**
  Taper:0.019mm(0.0007in) max.
- **If the difference between measurements X and Y exceeds the maximum out-of-round, rebore the cylinder to oversize.**
  out-of-round:0.019mm(0.0007in)max.

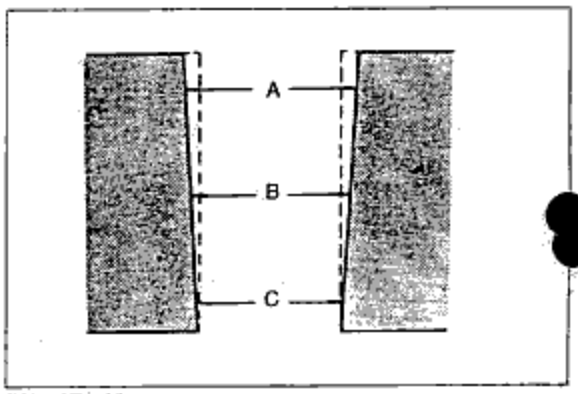

Fig. 1B-43

If the upper part of a cylinder wall shows uneven wear, remove the ridge with a ridge reamer.

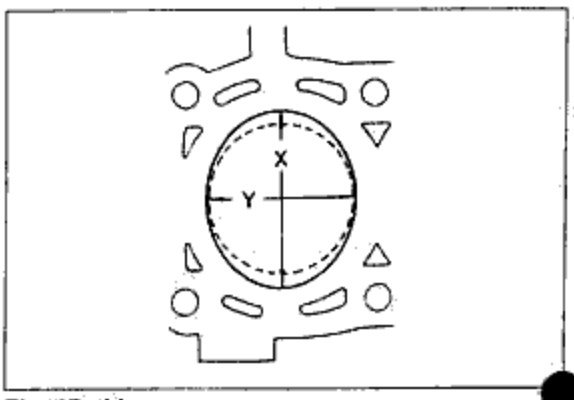

Fig. 1B-44

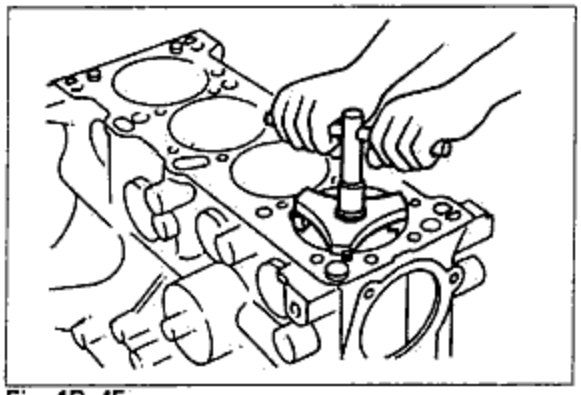

Fig. 1B-45

◆ PISTON AND PISTON RING

If the piston is replaced, the piston rings must also be replaced.

1. Inspect the outer circumferences of all pistons for seizure or scoring. Replace the piston if necessary.
2. Measure the outer diameter of each piston at a right angle (90°) to the piston pin, 18mm(0.709in) below the oil ring land lower edge.

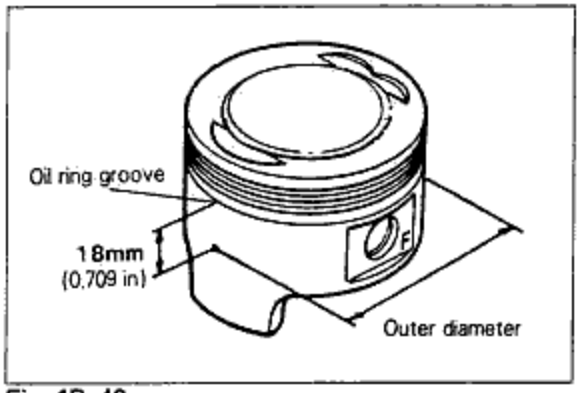

Fig. 1B-46

Piston diameter

Standard: 85.944 to 85.964mm(3.3836 to 3.3844in)
0.25mm(0.010in) oversize:
86.194 to 86.214mm(3.3935 to 3.3943in)
0.50mm(0.020in) oversize:
86.444 to 86.464mm(3.4033 to 3.4041in)

3. Measure the piston—to—cylinder clearance.
   Maximum: 0.15mm(0.006in)

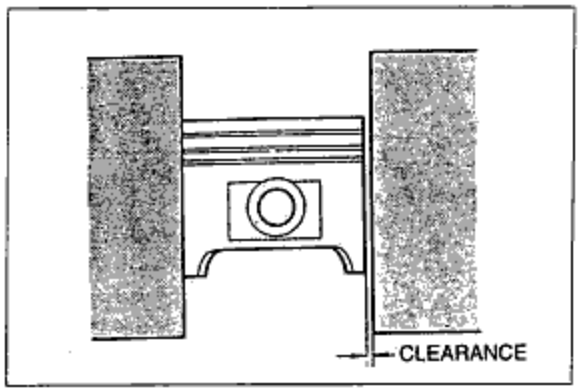

Fig. 1B-47

4. If the clearance exceeds the maximun, replace the piston or rebore the cylinders to fit oversize pistons.

Piston and Piston Rings

1. Inspect the piston rings for damage, abnormal wear, or breakage. Replace the piston rings, if necessary.

2. Insert the piston ring into the cylinder by hand and use the piston to push it to the bottom of the ring travel.

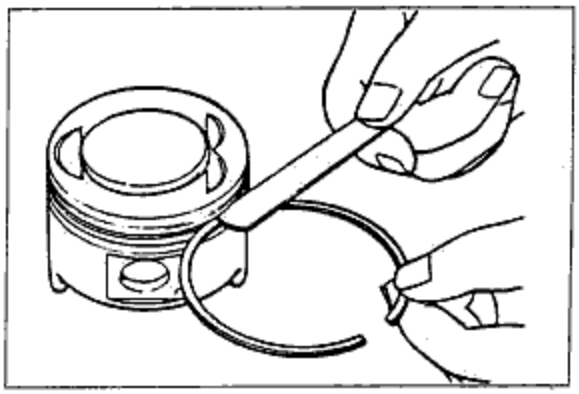

Fig. 1B-48

3. Measure the piston ring to ring land clearance around the entire circumference using a new piston ring.
   Clearance
   Maximum: 0.15mm(0.006in)

4. Measure each piston ring end gap with a feeler gauge, Replace the piston ring if necessary.
   End gap
   Maximum: 1.0mm(0.039in)

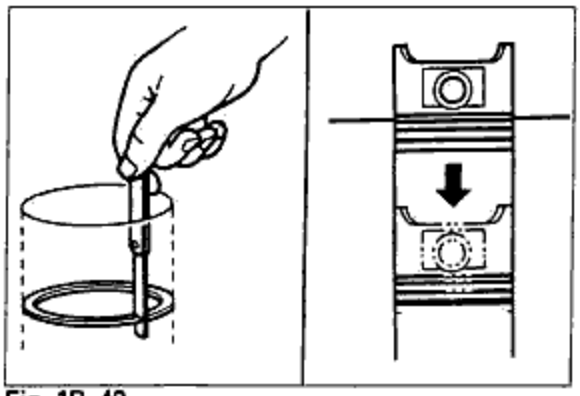

Fig. 1B-49

◆ CONNECTING RODS

1. Measure each connecting rod for bending or twisting
   Bending:
   0.075mm(0.0029in) max.per 50mm(1.9685in)
   Twisting:
   0.180mm(0.007in)max.per 50mm(1.9685in)

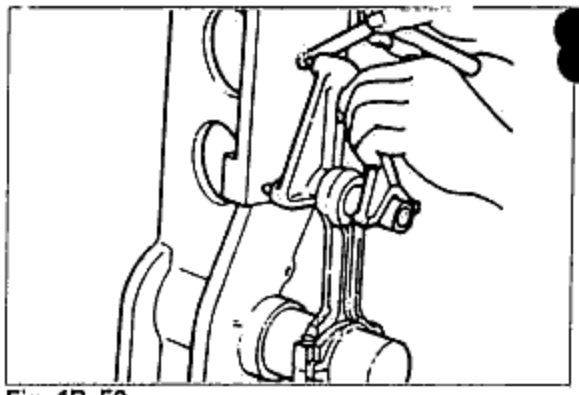

Fig. 1B-50

◆ CRANKSHAFT

1. Check the journals and pins for damage, scoring, and oil hole clogging.
2. Set the crankshaft on V-blocks.
3. Measure the crankshaft runout at the center journal.
4. Replace the crankshaft if necessary.
   Runout: 0.03mm(0.0012in)

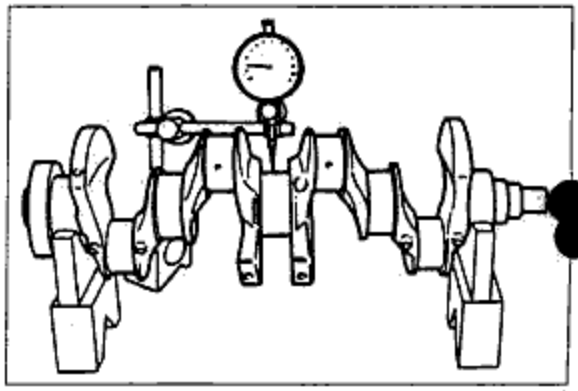

Fig. 1B-51

Standard journal diameters

Main journal diameter:	59.937~59.955mm (2.3598~2.3605in)
Crankshaft pin diameter:	50.940~50.955mm (2.0056~2.0061in)

Rear housing assembly oil seal sliding surface:
89.946~90.000mm(3.5412~3.5434in)

Oil pump body assembly oil seal sliding surface:
33.961~34.000mm(1.3371~1.3386in)

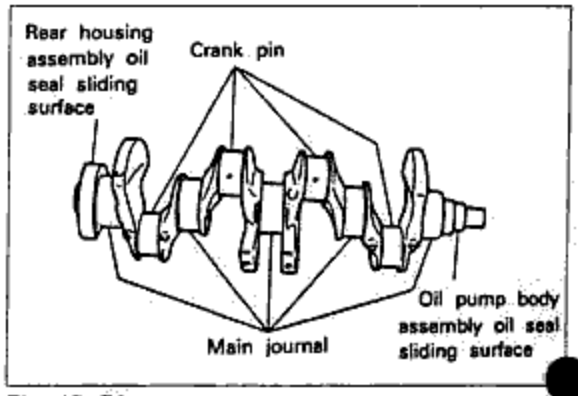

Fig. 1B-52

3. Measure the 4 places(directions A and B, 2 places front and rear) shown in the figure for uneven wear of the sliding surface of the oil seal, pin, and journal.
   Journal elliptical limit: 0.05mm(0.0020in)

4. If the wear exceeds the limit, grind the crankshaft to agree with the undersize bearing.
   Journal grindings: 0.75mm(0.0295in)
   Undersize bearings:
   0.25mm(0.010m), 0.50mm(0.020in)
   0.75mm(0.0295in)

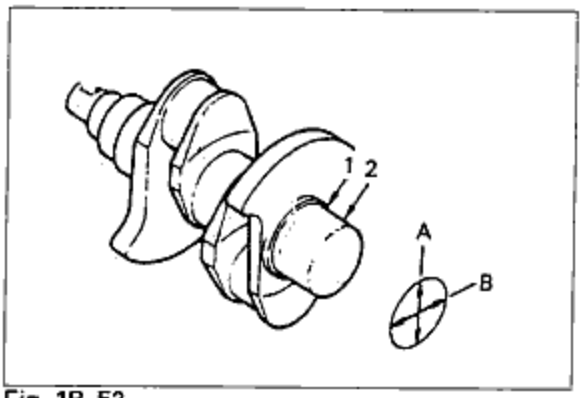

Fig. 1B-53

Caution:
When grinding the journal or pin, pay attention to the each dimension "R" of the fillets.

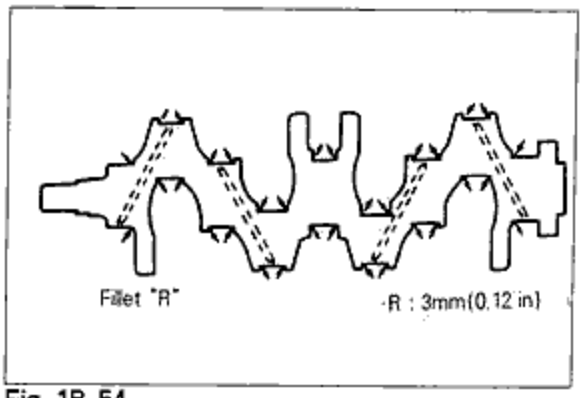

Fig. 1B-54

FLYWHEEL ASSEMBLY

1. Check the clutch disc contacting surface for scoring abrasions, roughness, or distortion.
   Repair or replace if necessary.
   Distortion: 0.20mm(0.008in)
2. Check for damage or wear of the ring gear teeth.
   Replace if necessary.

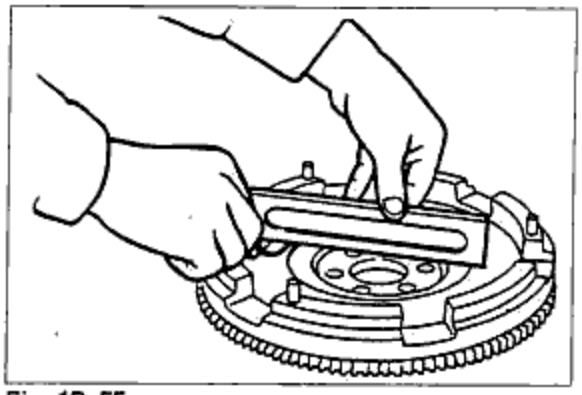
Fig. 1B-55

TIMING BELT

1. Replace the belt if there is any oil, grease, or moisture on it.
2. Check for damage, wear, peeling, cracks, or hardening.
   Replace if necessary.

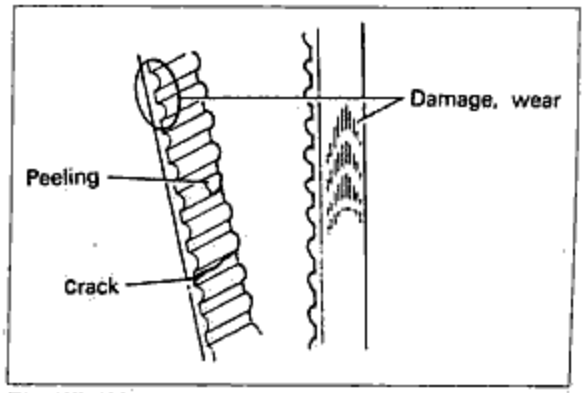

Fig. 1B-56

Cautions:

- Never twist the timing belt forcefully, turn it inside out, or bend it.
- Be very careful not to allow oil, grease, or moisture on the belt.

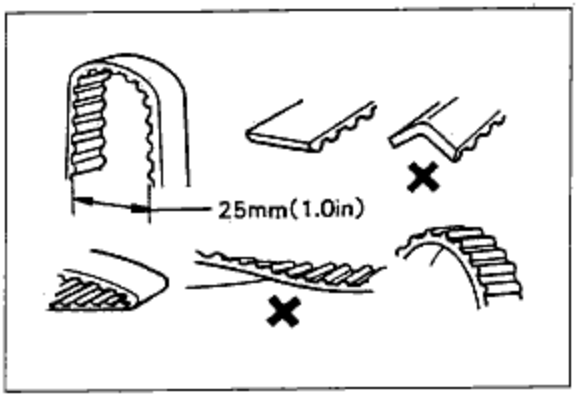

Fig. 1B-57

◆ TENSIONER

1. Check the rotation of the pulley, and check for play or abnormal noise. Replace if necessary.

Cautions:

- Do not clean the tensioner with cleaning fluids.
- If it is dirty, use a rag to wipe it clean, so as to avoid scratching it.

◆ TIMING BELT CRANKSHAFT PULLEY AND CAMSHAFT PULLEY

1. Check the pulley teeth for damage, wear, deformation, etc.
   Replace if necessary.

Caution:

Do not clean the pulley. If it is dirty, use a rag to wipe it clean, so as to avoid it being contaminated by oil, etc.

◆ TIMING BELT COVERS (LOWER AND UPPER)

1. Check for deformation or cracks. Replace if necessary.
2. Check the gasket for deformation, cracks, or hardening.
   Replace if necessary.

ASSEMBLY OF ENGINE

NOTES FOR ASSEMBLY

(1) Be sure all parts are clean before installation.
(2) Apply sliding and turning parts with new engine oil.
(3) Do not reuse gaskets and oil seals.
(4) During assembly, once again check critical clearances, end plays, oil clearances, bends, etc.
(5) Tighten bolts of critical parts to the specified torques.
(6) Replace plain bearings if they are peeling, burned, or otherwise damaged.

PISTONS AND CONNECTING RODS

1. Install the pistons and connecting rods by using the piston pin setting tool(49 G030 040).
   (1) Align the oil hole in the large end of each connecting rod opposite to the "F" mark on the piston.
   (2) Apply a coating of engine oil to circumference of each piston pin and to the small end of each connecting rod.

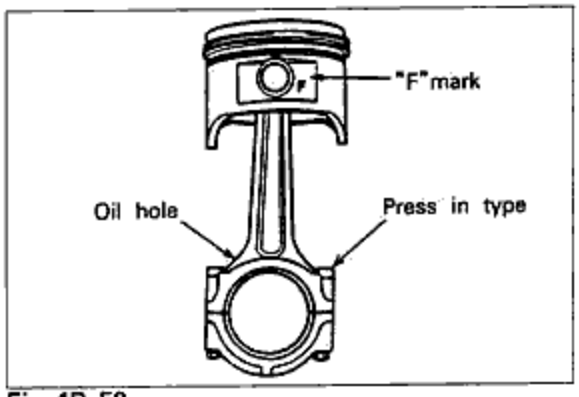

Fig. 1B-58

   (3) Set the piston pin setting tool (49 G030 040) in position.
   (4) Press the upper part of the installer (49 G030 042) with a press in order to force the piston pin in.

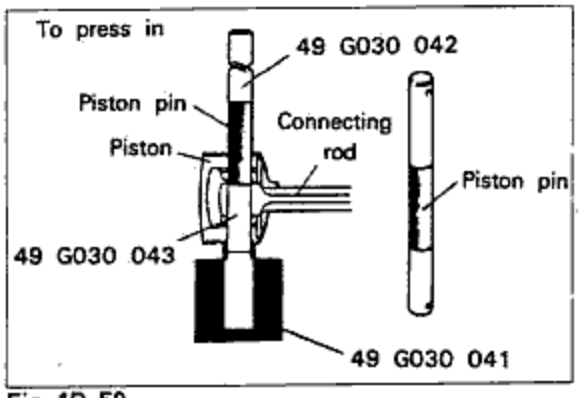

Fig. 1B-59

Caution:
Insert the piston pin from the direction of the "F" mark on the piston.

   (5) The piston pin should go in until the lower end of the guide (49 G030 043) contacts the bottom of the block (49 G030 041).
   (6) The pressing force is 500~1,500kg(1102~3311lb), if the pin cannot be pressed in within this range, replace the piston pin or the connecting rod.

Caution:
After pressing in the piston pin, check the oscillating torque of the connecting rod.

2. Install the 3-piece oil ring onto the piston as follows:
   (1) Install the spacer.
   (2) Install the upper side rail:
      ① Insert one edge between the groove and the spacer, and press it firmly with your thumb.
      ② Next, finish installing by pressing the rail with your other thumb.
   (3) Install the lower side rail in the same way as the upper side rail.

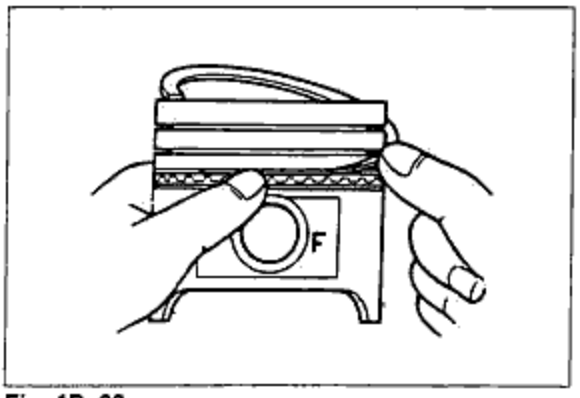

Fig. 1B-60

Cautions:
- Be careful about the direction of the spacer opening.
- After installation of the upper and lower side rails, check to be sure that they turn smoothly in both directions.
- Apply a liberal coating of engine oil during installation.

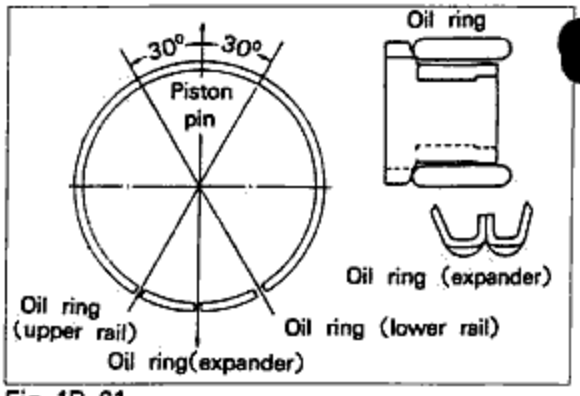

Fig. 1B-61

3. Use a piston ring inserting tool (commercially available) to install the piston rings to the pistons.

Cautions:
- Install the lower piston ring first, and then the upper one.
- The rings should be mounted so that the "R" marks face upward.

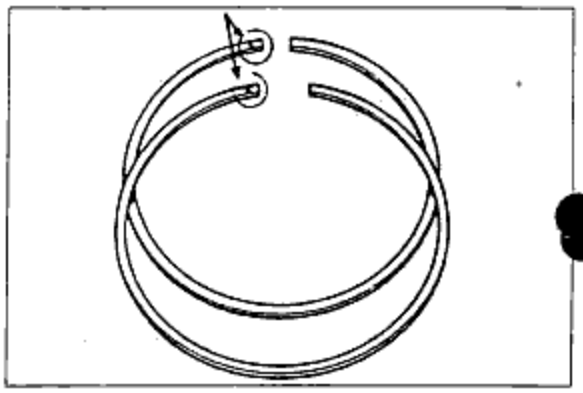

Fig. 1B-62

- Apply a liberal applying of engine oil during installation.
- The opening of each ring should be as shown in the figure.

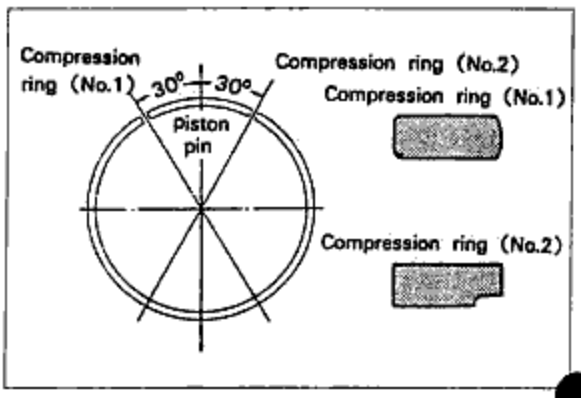

Fig. 1B-63

4. Insert each piston and connecting rod into the cylinder block by using a piston inserting tool(commercially available).

Cautions:

- The pistons must be inserted so that the "F" marks face the front of the cylinder block.
- Apply a liberal coating of engine oil to the cylinder walls, piston circumference, and rings.

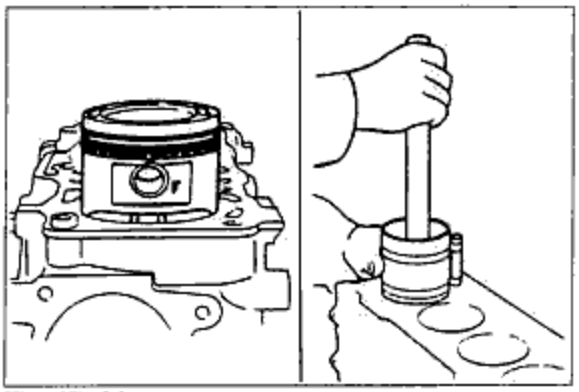

Fig. 1B-64

☑ CRANKSHAFT ASSEMBLY

1. Install the main bearings into the cylinder block.

Cautions:

- The shape of the center main bearing on the cylinder block side is different from that of the other main bearings.

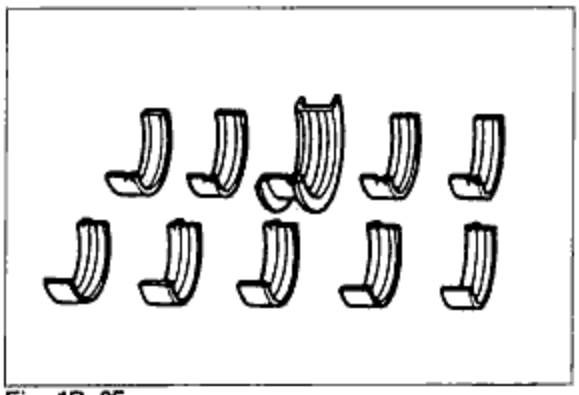

Fig. 1B-65

- No oil, dirt, etc. should be on the back surface of the bearings.

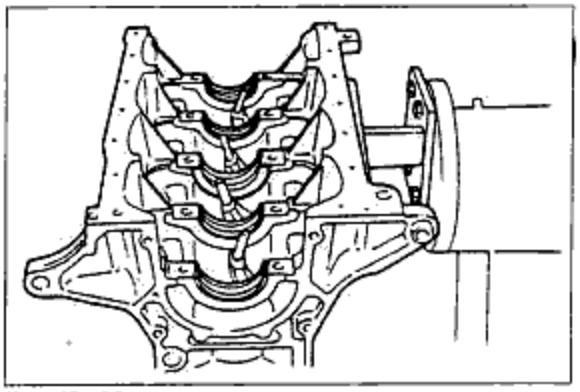

Fig. 1B-66

(1) Check the oil clearance of the crankshaft and main bearings as follows by using a Plastigauge.

① Remove any oil, dirt, etc. from the journal or bearing.

② Position the Plasti-gauge on the top of the journal(in the journal axial direction).

③ Set the main bearing cap in position, and tighten it to the specified torque.

Main bearing cap tightening torque:

8.4~9.4m·kg(61~68ft·lb)

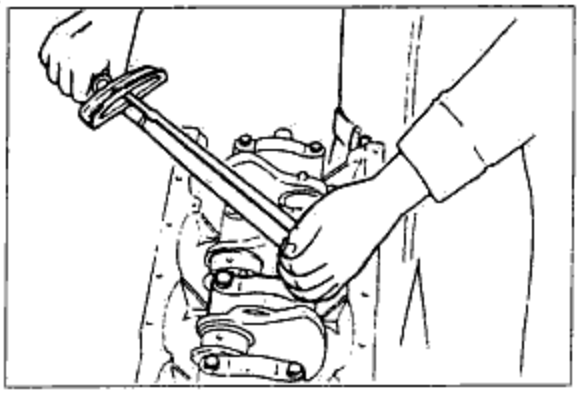

Fig. 1B-67

④ Remove the main bearing cap, and measure the oil clearance.

⑤ If the oil clearance exceeds the limit, repair the crankshaft by grinding, and use undersize bearings.

Caution:

- **There are 3 sizes of undersize bearings 0.25mm(0.010in), 0.50mm(0.020in) and 0.75mm(0.030in) decide which size to use after measuring the crankshaft end play.**

(2) After checking and correcting the oil clearance, apply a coating of engine oil to the main bearing and main journal, and then install the crankshaft.

Cautions:

- **Position the plasti-gauge horizontally on the crankshaft, away from the oil hole.**
- **Do not rotate the crankshaft when measuring the oil clearance.**
- **Install the main bearing cap according to the cap No. and ← mark.**

(3) Check the crankshaft end play.
If it exceeds the limit, use the center main bearing to make the adjustment.

Standard end play:	0.08~0.282mm (0.0031~0.001in)
End play limit:	0.3mm(0.012in)
Center main bearing standard Width:	27.94~27.99mm (1.1000~1.1020in)
Underize center main bearing undersize	
0.25mm(0.010in):	28.04~28.09mm (1.1040~1.1059in)
0.50mm(0.020in):	28.12~28.17mm (1.1067~1.1091in)
0.75mm(0.030in):	28.20~28.25mm (1.1141~1.1122in)
Standard:	27.94~27.99mm (1.0999~1.1019in)

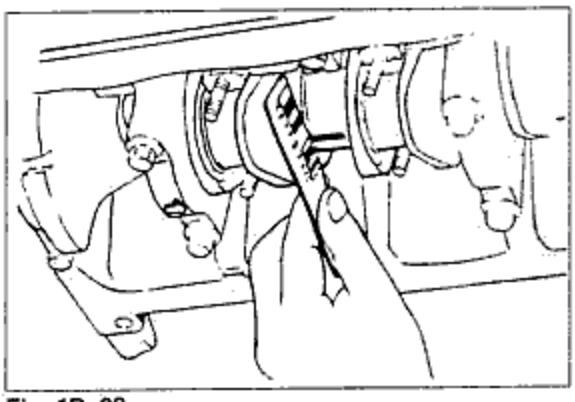

Fig. 1B-68

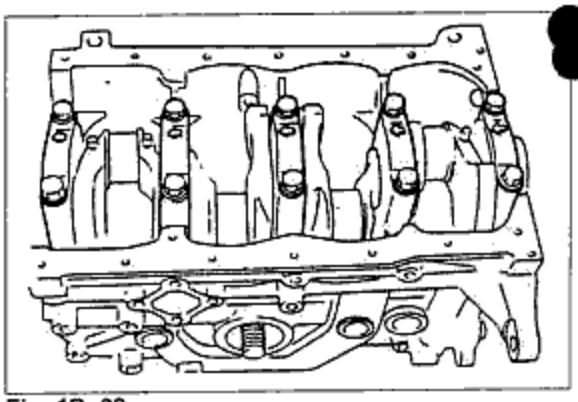

Fig. 1B-69

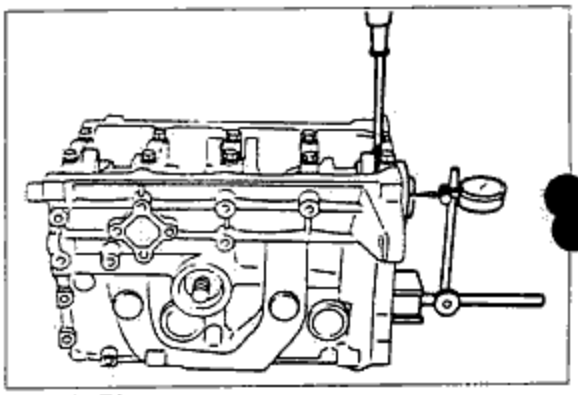

Fig. 1B-70

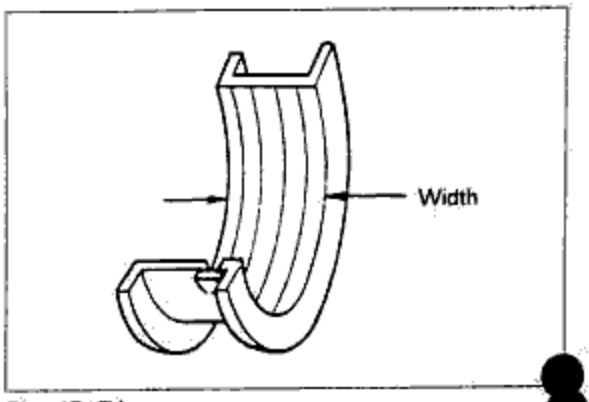

Fig. 1B-71

2. Use a piece of pipe to tap the pilot bearing onto the crankshaft.

Cautions:

- Apply a coating of engine oil to the outer circumference of the bearing and the crankshaft.
- Set a piece of pipe against the outer race of the bearing and tap evenly.
- After installation, apply the bearing with grease.

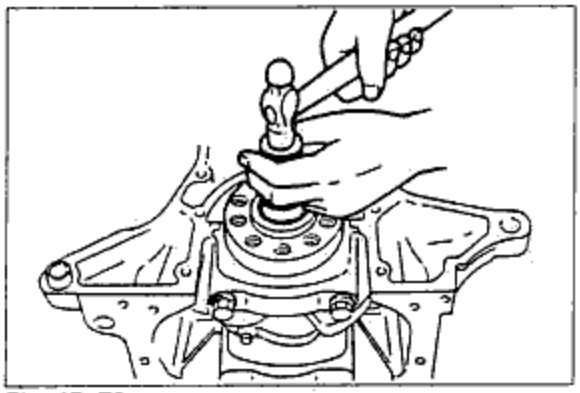

Fig. 1B-72

3. Install each connecting rod cap as follows:

(1) Check and adjust the connecting rod bearing and crankshaft pin journal oil clearance by the same procedure used to check and adjust the crankshaft and main bearing oil clearance.

Connecting rod cap

Tightening troque: 6.6 to 7.0kg·m (48.2 to 51.1 ft·lb)

Main bearing oil clearance: 0.027 to 0.067mm (0.0010 to 0.0026 in)

Undersize connecting rod bearings:

0.25mm(0.010in),
0.50mm(0.020in),
0.75mm(0.030in)

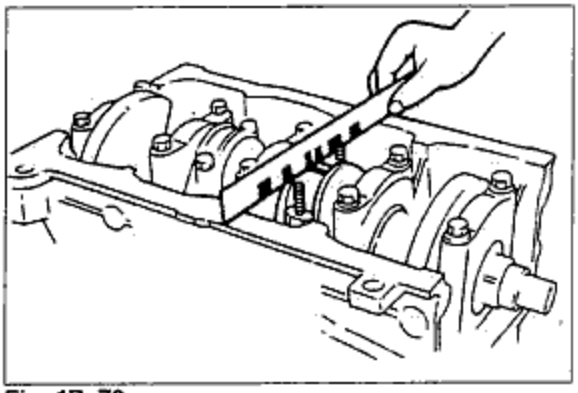

Fig. 1B-73

Cautions:

- Align the matching marks on the cap and on the connecting rod when installing the connecting rod cap.
- Don't forget to apply oil after measurement.

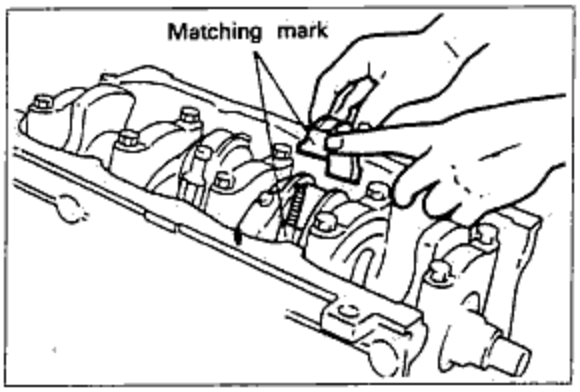

Fig. 1B-74

(2) Check the end play of the connecting rod.

End play: 0.30mm(0.012in)

Caution:

- Measure the connecting rod gap before installation.

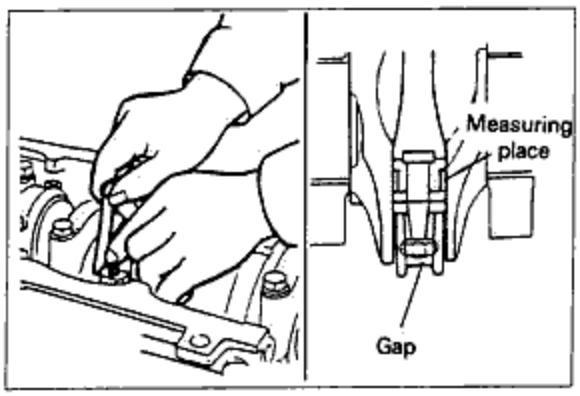

Fig. 1B-75

◈ REAR COVER ASSEMBLY AND END PLATE

1. Press the oil seal into the rear cover.

   Caution:
   Before pressing in, apply the rear cover and the oil seal with engine oil.

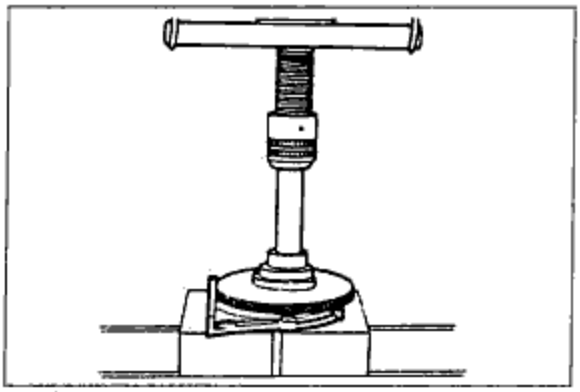

Fig. 1B-76

2. Connect the tubular pin to the cylinder block, and then install the rear cover assembly through the gasket.
   Rear cover assembly tightening torque:
   0.8 to 1.2kg·m(5.9 to 8.7ft·lb)

   Caution:
   Apply engine oil to seal lip, before installing cover.

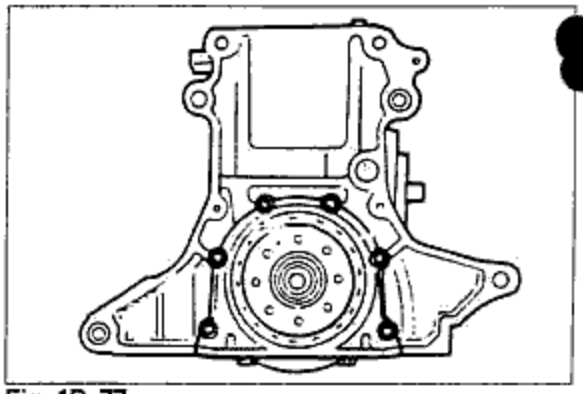

Fig. 1B-77

3. Cut away the part of the gasket which projects out from the rear cover assembly to the oil pan.

   Caution:
   · Be careful not to scratch the rear cover assembly.

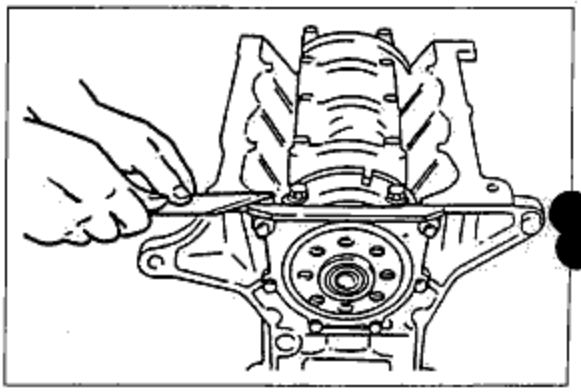

Fig. 1B-78

4. Install the end plate.
   Tightening torque: 1.9 to 3.1kg·m(13.7 to 22.4ft·lb)

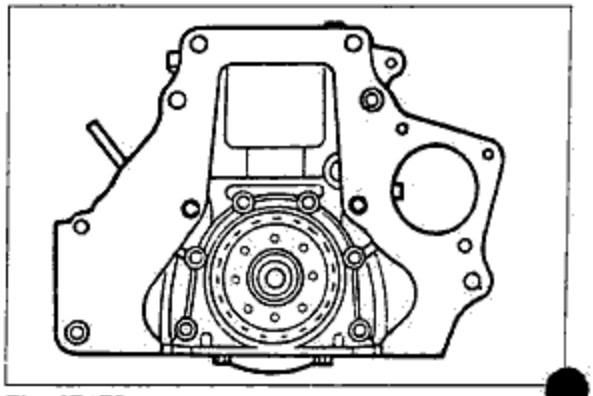

Fig. 1B-79

◈ OIL PUMP BODY ASSEMBLY

1. Install an O-ring applied with grease (lithium base, NLGI No.2) onto the oil pump body assembly.
2. Connect the tubular pin to the oil pump body assembly, and then install after applying with sealant 515(part no. 1016 77 739).

Cautions:

- Do not let sealant get into the oil hole.
- Apply engine oil to the oil seal lip.
- Before applying the sealant, use a rag to clean away any dirt or grease from the contact surfaces of the cylinder block and the oil pump body assembly.
- Apply the sealant continuously without any interruption around the bead as shown in the figure(fig. 1B-81).
- After installation, clean away any sealant which oozes out.

  Tightening torque: 1.9 to 2.6kg·m(13.7 to 18.8ft·lb)

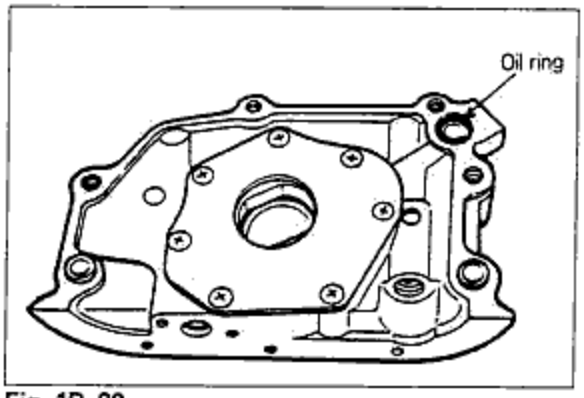

Fig. 1B-80

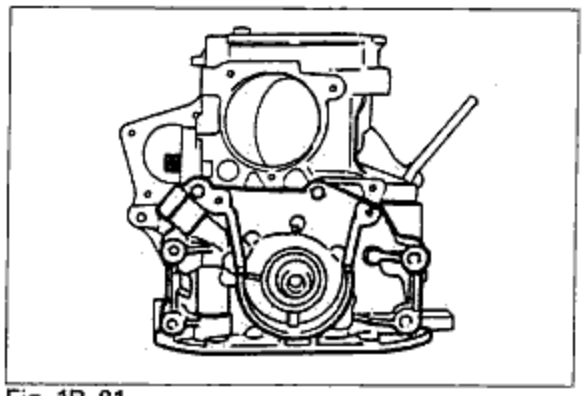
Fig. 1B-81

◈ OIL STRAINER AND OIL PAN

1. Install the oil strainer onto the oil pump body and cylinder block.

   Tightening torque: 0.8 to 1.2kg·m(5.9 to 8.7ft·lb)

2. Install the oil pan.

Cautions:

- Before applying sealant, use a rag to remove any dirt or grease from the contact surfaces of the oil pan and cylinder block.
- Apply sealant all around the inner surfaces of bolt holes[thickness 2~4mm(0.079~0.157in)].
- Overlap the ends of the sealant.
- Apply sealant to only the cylinder block side or the oil pan side.

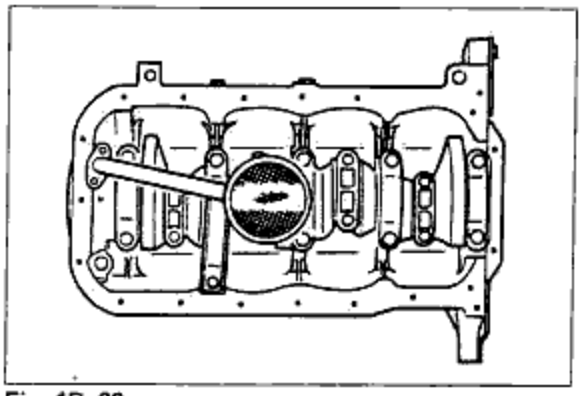
Fig. 1B-82

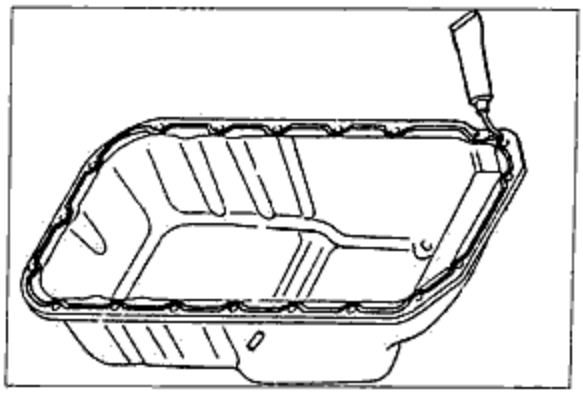
Fig. 1B-83

- After applying the sealant, the oil pan must be tightened completely within 30 minutes.
- If a gasket is used, apply sealant to the shaded areas in the figure and then install the gasket and the oil pan.

Oil pan tightening torque: 0.7~1.2m·kg(5.1~8.7ft·lb)

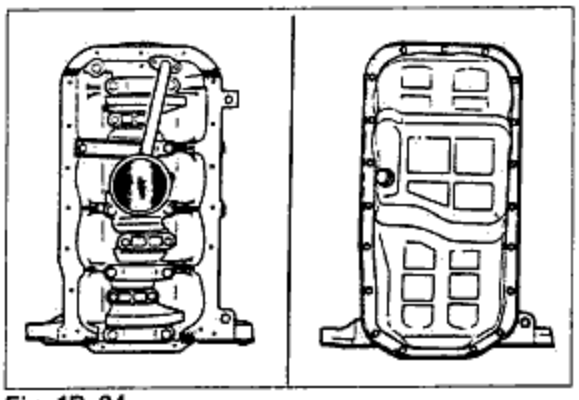

Fig. 1B-84

◆ FLYWHEEL ASSEMBLY, CLUTCH DISC AND CLUTCH COVER

1. Install the flywheel assembly.
   Flywheel assembly tightening torque:
   9.8~10.5m·kg(71~76ft·lb)

   Caution:
   Apply sealant(part no. 8530 77 743) onto the lock bolt to prevent oil leakage from stud bolts.

   Cautions:
   - Use the ring gear brake (49 E301 060) to install the flywheel assembly.
   - After installation of the flywheel assembly, don't remove the ring gear brake (49 E301 060).

NOTE
Installation of the flywheel assembly will be easier if the No.1 piston is at top dead center.

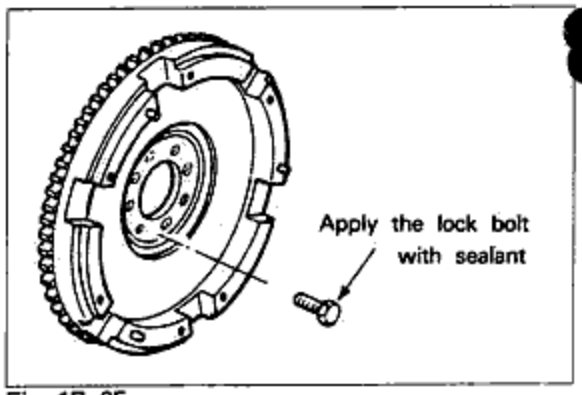

Fig. 1B-85

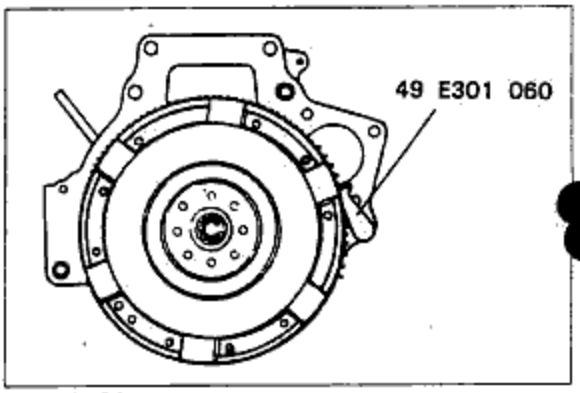

Fig. 1B-86

2. Install the clutch disc and clutch cover by using the clutch disc center tool(49 SE01 310).
   Clutch cover tightening torque:
   1.8~2.7m·kg(0.071~0.106ft·lb)

   Cautions:
   - Don't forget to insert the spring washer.
   - Be careful of the installation direction of the clutch disc.(See section 6.)

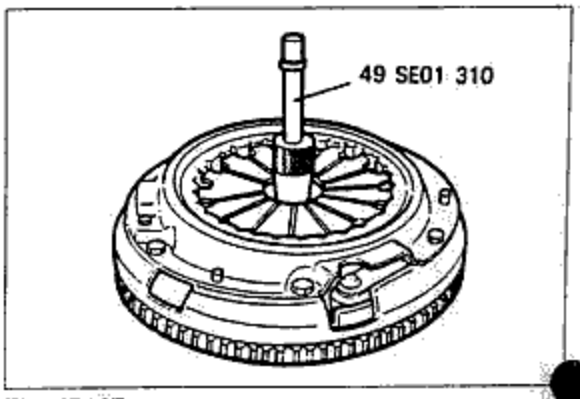

Fig. 1B-87

◈ ENGINE BRACKET NO.3 AND WATER PUMP(COMPLETE)

1. Install the engine bracket No.3.
   Tightening torque: 3.8 to 5.3kg·m(27.7 to 38.6ft·lb)

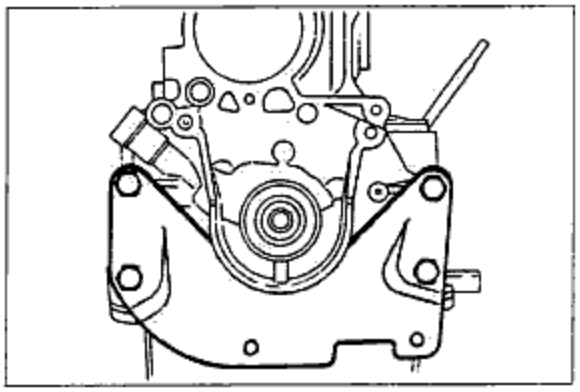

Fig. 1B-88

2. Install the water pump(complete) with a gasket.
   Tightening torque: 1.9 to 2.6kg·m(13.8 to 18.9ft·lb)

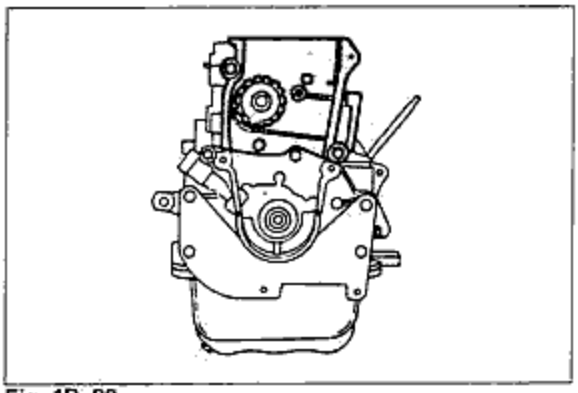

Fig. 1B-89

◈ CYLINDER HEAD AND ROCKER SHAFT ASSEMBLY

1. Use a rag to thoroughly clean away dirt and grease from the top of the cylinder block.
2. Place the gasket in position.

Caution:

- **Use a new gasket.**

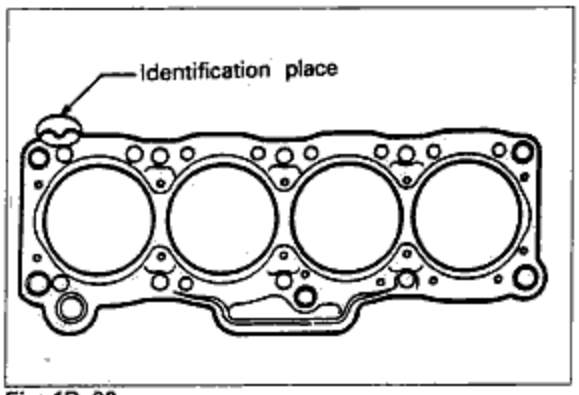

Fig. 1B-90

3. Install the cylinder head(complete).
   Cylinder head(complete) tightening torque: 8.2 to 8.8kg·m(59.7 to 64.1ft·lb)

Cautions:

- **Tighten evenly, and in the order shown in the figure.**
- **Don't forget to insert the plain washer.**

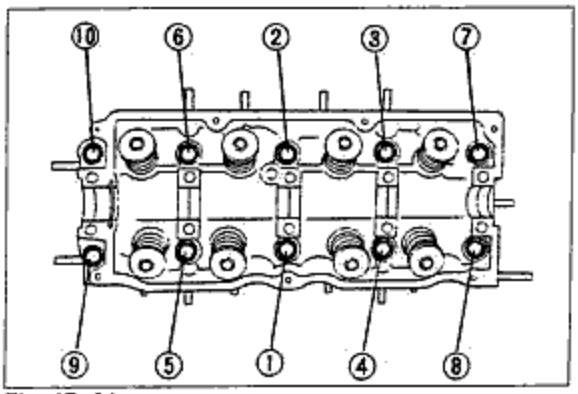

Fig. 1B-91

4. Install the camshaft, and check the oil clearance as follows:
   (1) Remove any oil, grease, or dirt from the journal and the bearing.
   (2) Position a "Plasti-gauge" on top of the journal (journal axial direction).
   (3) Place the camshaft cap in position, and tighten to the specified torque.
   Camshaft cap tightening torque:
   1.8 to 2.7kg·m(13.1 to 19.7ft·lb)
   (4) Remove the camshaft cap and measure the oil clearance.
   Standard oil clearances:

No.1 and 5:	**0.035 to 0.085mm (0.0014 to 0.0033in)**
No.2, 3 and 4:	**0.065 to 0.115mm (0.0026 to 0.0045in)**
Oil clearance:	**0.15mm(0.0059in)**

   (5) If the oil clearance exceeds the limit, replace the cylinder head(complete) and the camshaft cap.

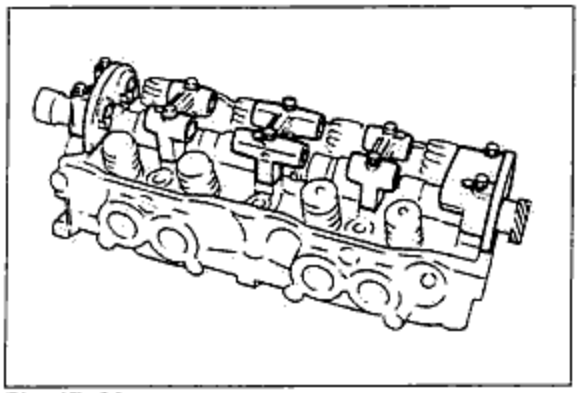
Fig. 1B-92

Caution:
- **Use a new cylinder head gasket.**

5. After checking and correcting the oil clearance, apply the journal and the bearing with engine oil, and then place the camshaft in position.

Caution:
- **Be sure that the knock pin of the camshaft faces straight up.**

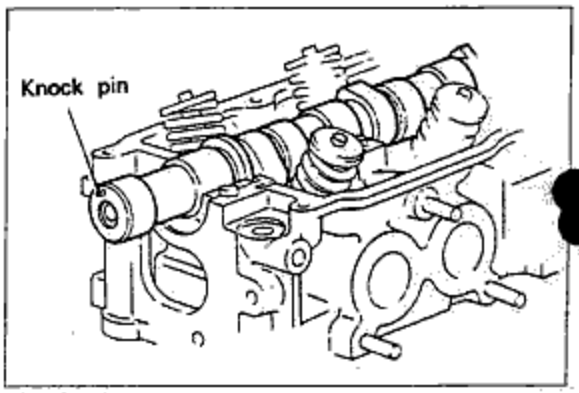

Fig. 1B-93

6. Assemble the rocker shaft equipment

Cautions:
- **Liberally coat with engine oil during the installation.**
- **The rocker arm shafts(intake and exhaust, front and rear) are not interchangeable.**
- **Rocker arms No.1 and No.3 are the same, and No.2 and No.4 are the same.**

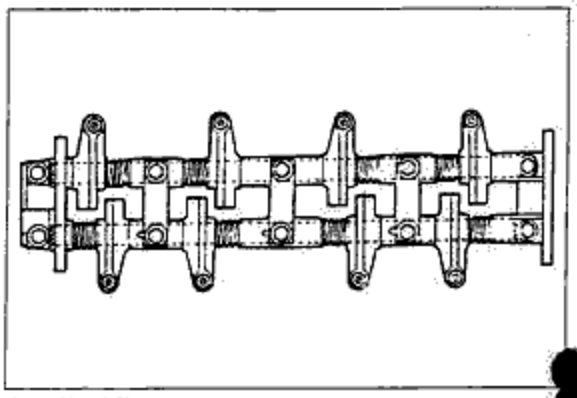
Fig. 1B-94

NOTE

The installation bolts should be set.

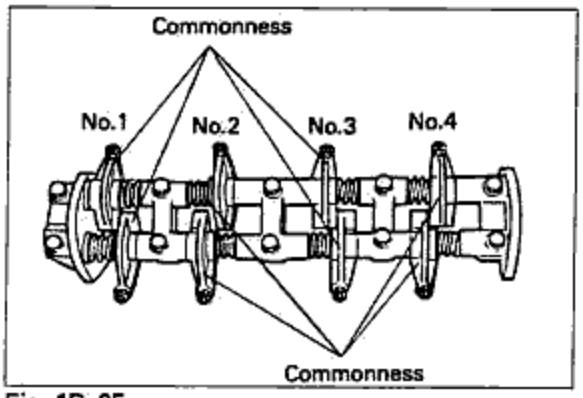

Fig. 1B-95

7. Apply a thin coating of sealant to the shaded areas in the figure.

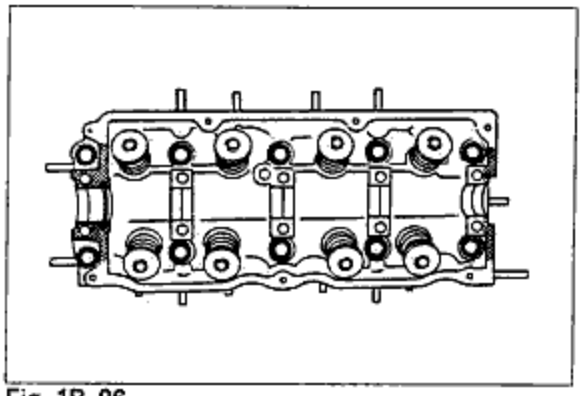

Fig. 1B-96

8. Install the rocker shaft equipment.

Cautions:

- Apply a liberal coating of engine oil to the camshaft journal and sliding parts.
- When tightening the rocker shaft equipment, do so evenly, and in the order shown in the figure.
  Tightening torque: 1.8 to 2.7kg·m(13.1to 19.7ft·lb)

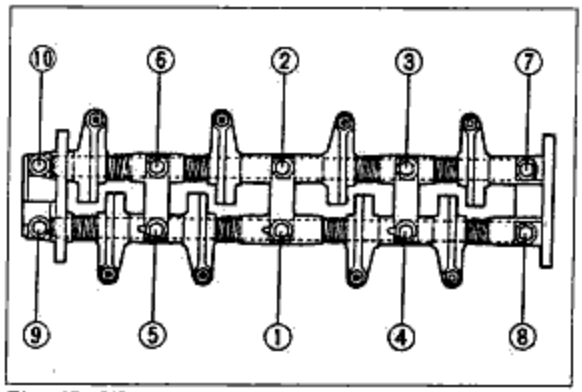

Fig. 1B-97

◆ FRONT HOUSING ASSEMBLY

1. Press in the oil seal to the front housing.

Caution:

Apply a coating of engine oil to the contact surfaces of the front housing and the oil seal.

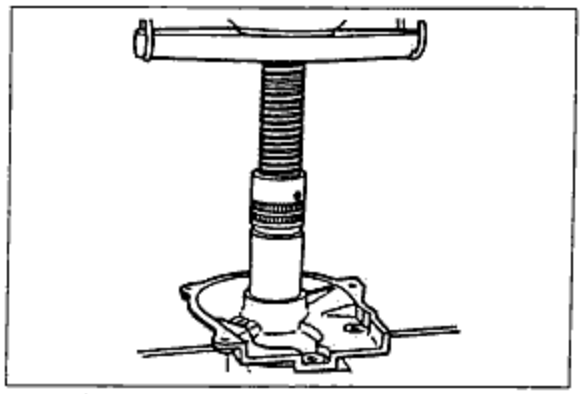

Fig. 1B-98

2. Apply the oil seal lip with engine oil, and then install it with a gasket.

Caution:

- Be sure there is no grease or dirt on the gasket.

Tightening torque: 1.9 to 2.6kg·m(13.8 to 18.9ft·lb)

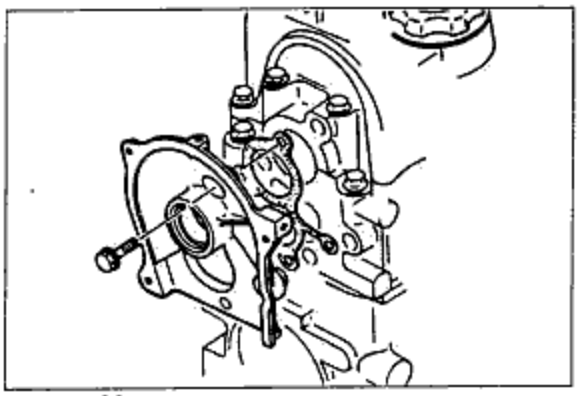

Fig. 1B-99

NOTE

There is an embossed mark on the front of the front housing for identification.

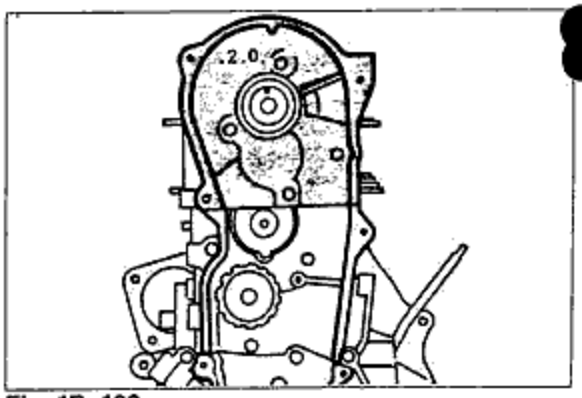

Fig. 1B-100

◆ TIMING BELT MECHANISM

1. Install the timing belt crankshaft with the semicircular key.

Timing belt crankshaft pulley bolt tightening torque:
16 to 17kg·m(116.6 to 123.8ft·lb)

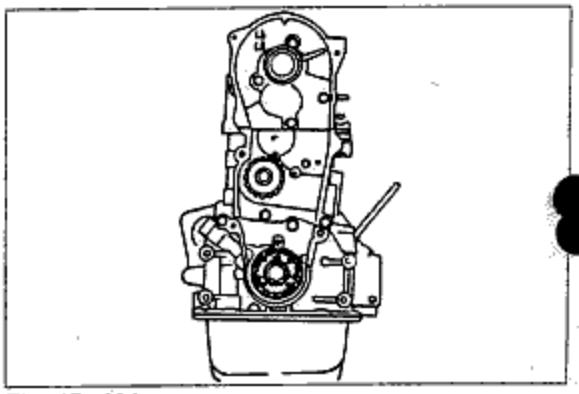

Fig. 1B-101

NOTE

Before installation of the timing belt mechanism, reverse the direction in which the ring gear brake (49 E301 060) faces.

Cautions:

- Apply a coating of engine oil to the semicircular key and to the contact surfaces of the timing belt crank pulley and crankshaft.
- The matching mark on the oil pump body assembly should be aligned to the semicircular key.

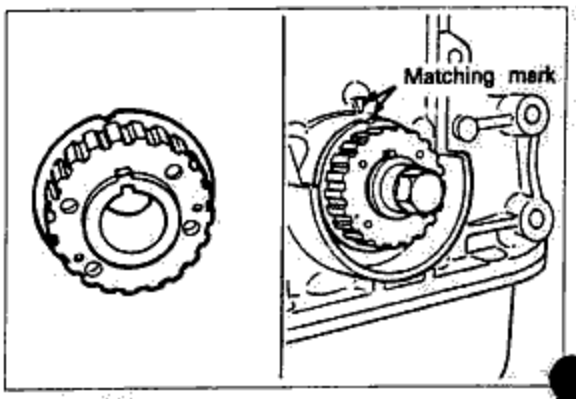

Fig. 1B-102

2. Install the camshaft pulley, and then tighten the bolt, being sure to use a washer.

Cautions:

- Installation should be made so that the top mark "A" on the camshaft pulley is at the exact top.
- Be sure that the matching mark "A" on the front housing and the top mark on the camshaft pulley should be matched.

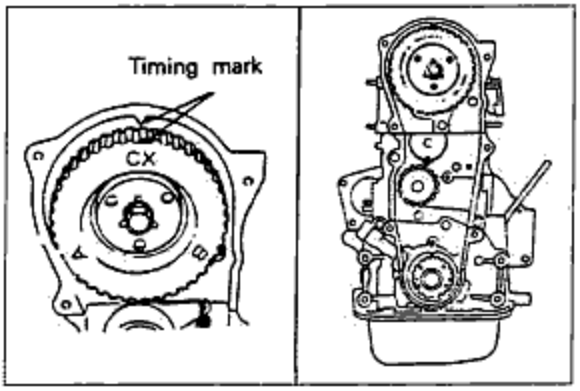

Fig. 1B-103

Camshaft pulley lock bolt tightening torque:
4.8 to 6.6kg·m(34.9 to 48.1ft·lb)

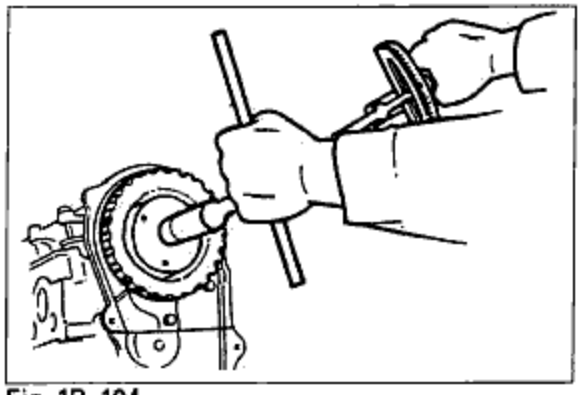
Fig. 1B-104

3. Install the tensioner.
4. Install the tensioner spring.

Caution:

Be careful to use the correct spring.

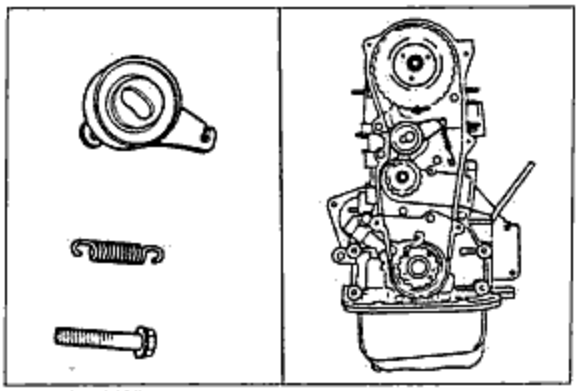
Fig. 1B-105

5. Position the tensioner all the way to the intake side, and then temporarily secure it by tightening the lock bolt.

6. Install the timing belt.

Cautions:

- Be sure the timing belt is installed in the correct direction, as indicated on the timing belt.
- Clean away any oil, grease, or dirt from the drive part of the timing belt.
- Be sure that there is no looseness at the belt tension side.

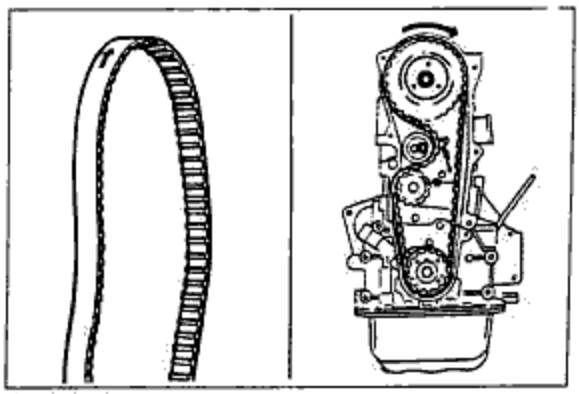
Fig. 1B-106

7. Tighten the timing belt to the correct tension as follows:
   (1) Loosen the lock bolt of the tensioner, and apply the spring tension to the belt.

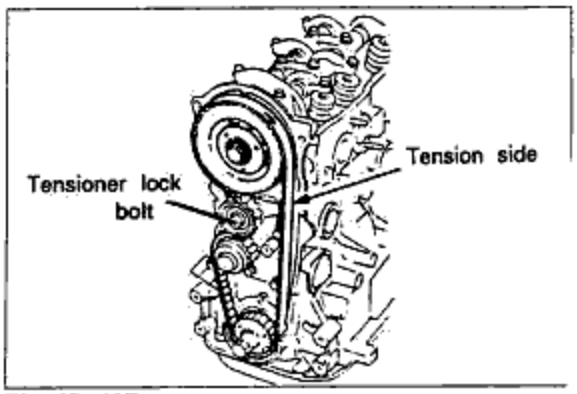

Fig. 1B-107

   (2) Release the ring gear brake(49 E301 060).
   (3) After turning the timing belt crankshaft pulley twice in the normal direction, align to top.
   (4) Tighten the tensioner lock bolt.
   Tightening torque:
   2.0 to 3.5kg·m(14.6 to 25.6ft·lb)

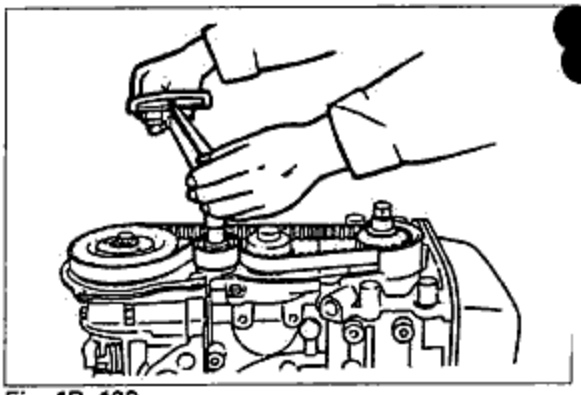
Fig. 1B-108

   (5) If the belt is reused, measure the tension between the crank pulley and the camshaft pulley, and if tension is not correct, repeat steps (1), (3), and (4).

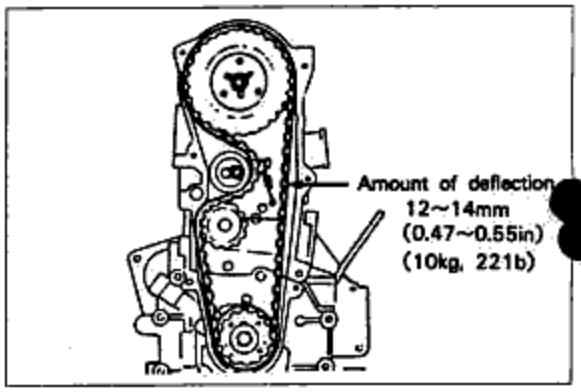

Fig. 1B-109

8. Install the lower timing belt cover.
   Tightening torque:0.7 to 1.0kg·m(5.1 to 7.3ft·lb)

   Caution:
   - **Install the timing belt cover, together with a gasket.**

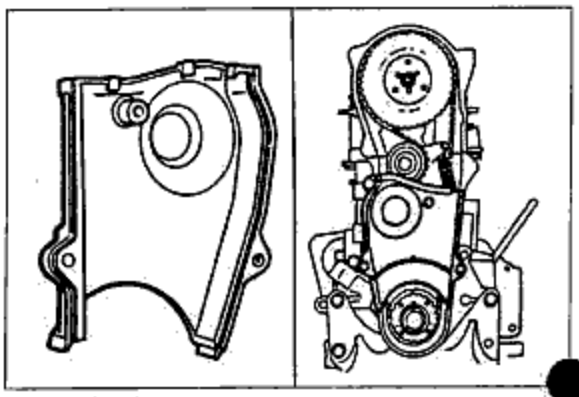
Fig. 1B-110

9. Install the upper timing belt cover.
   Tightening torque: 0.8 to 1.2kg·m(5.84 to 8.78ft·lb)

Caution:
- **Install the timing belt cover, together with a gasket.**

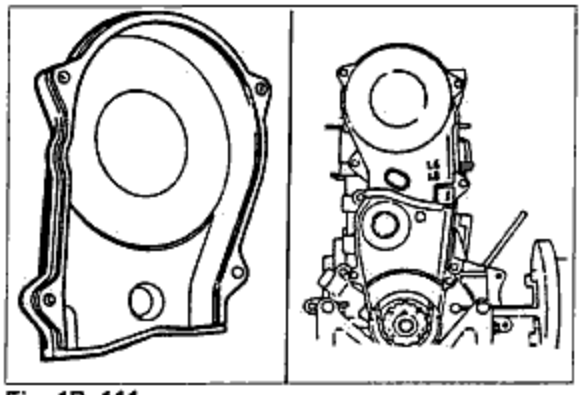

Fig. 1B-111

10. Install the crankshaft pulley.
    Tightening torque(through the plate):
    1.25 to 1.75kg·m(9.13 to 12.77ft·lb)

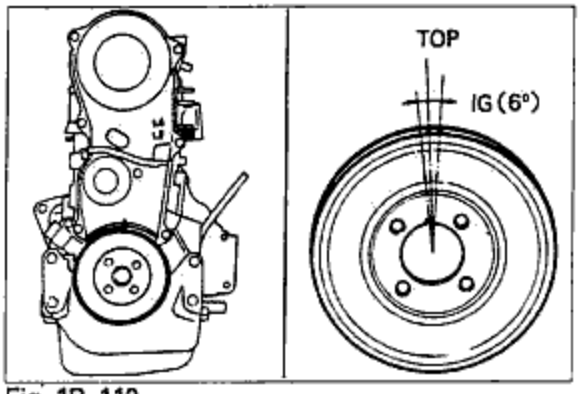

Fig. 1B-112

◆ FUEL PUMP

1. Install the fuel pump, together with the insulator and two gaskets.

Cautions:
- **Be sure there is no oil, grease, or dirt on the insulator or gasket surfaces.**
- **Apply the fuel cam sliding part with engine oil.**

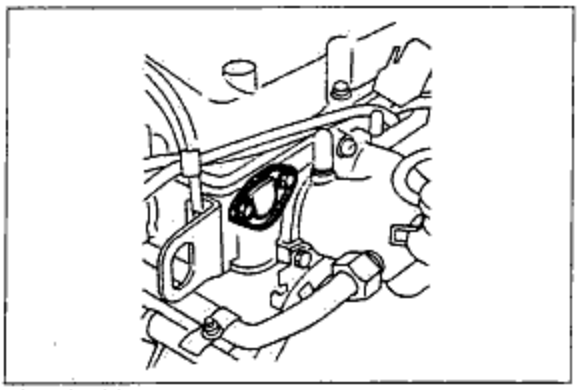

Fig. 1B-113

◆ VALVE CLEARANCE ADJUSTMENT

1. With the No.1 piston at TOP, adjust the valve clearance of No.1 and No.2 of the intake side and No.1 and No.3 of the exhaust side.
2. Release the ring gear brake (49 E301 060), turn the crankshaft one turn (forward direction), and then adjust the rest of the valve clearances.

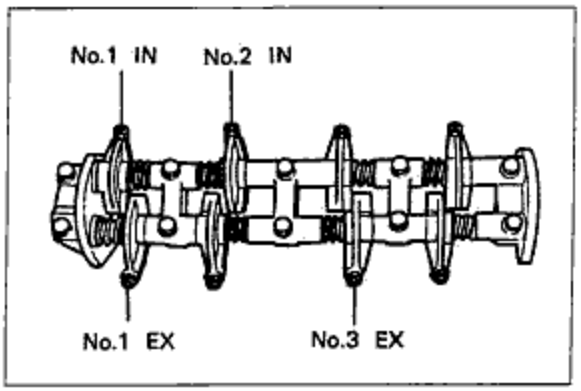

Fig. 1B-114

Valve clearances (warm engine)

Valve side:	intake	0.30mm(0.012in)
	Exhaust	0.30mm(0.012in)
Cam side:	Intake	0.25mm(0.01in)
	Exhaust	0.25mm(0.01in)

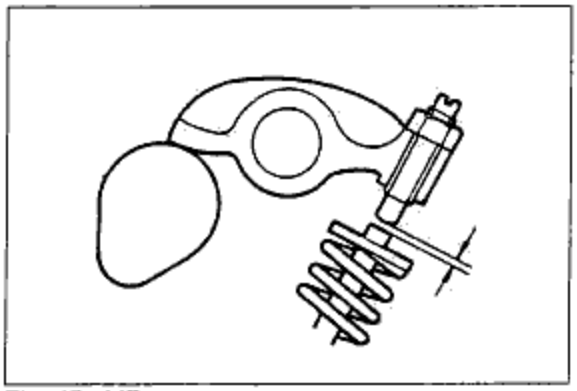

Fig. 1B-115

◆ CYLINDER HEAD COVER(COMPLETE), FILLER CAP, AND VENTILATION HOSE

1. Place the gasket in position on the cylinder head cover assembly.
2. Apply a coating of sealant to the shaded areas shown in the figure.

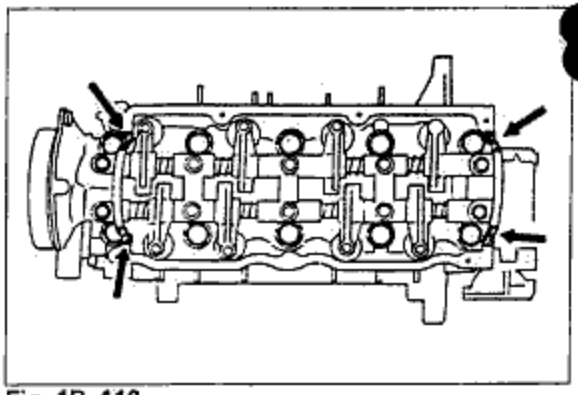

Fig. 1B-116

3. Install the cylinder head cover (complete).
   Tightening torque: 0.3 to 0.4kg·m(2.2 to 2.9ft·lb)
4. Install the filler cap and the ventilation hose.

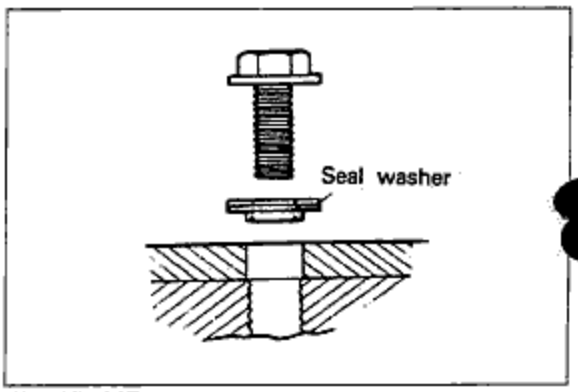

Fig. 1B-117

◆ OIL FILTER

Apply engine oil to the oil filter O-ring and install the filter, tightening thoroughly by hand.

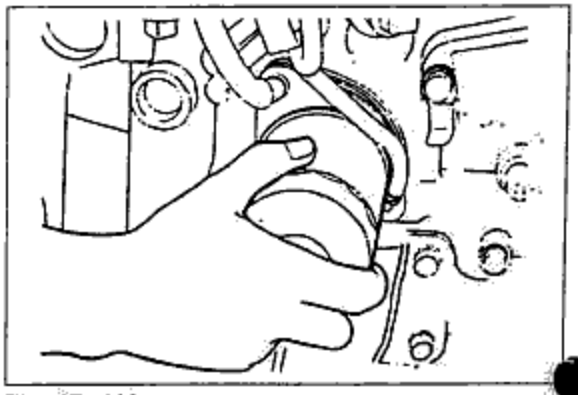

Fig. 1B-118

◆ ENGINE HANGERS

1. Install the front side engine hanger.
2. Install the rear side engine hanger and clip.
   Tightening torque: 1.9 to 2.6kg·m(13.8 to 18.9ft·lb)

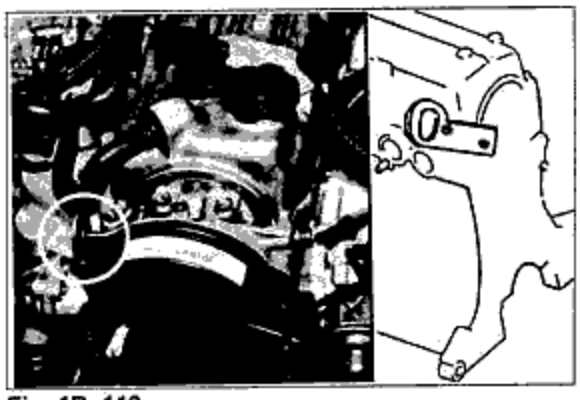

Fig. 1B-119

◆ THERMOSTAT AND COOLANT OUTLET

1. Install the thermostat with the jiggle pin facing upward.
2. Install the coolant outlet with a gasket.

   Caution:
   The printed side of the gasket should face the rear housing.

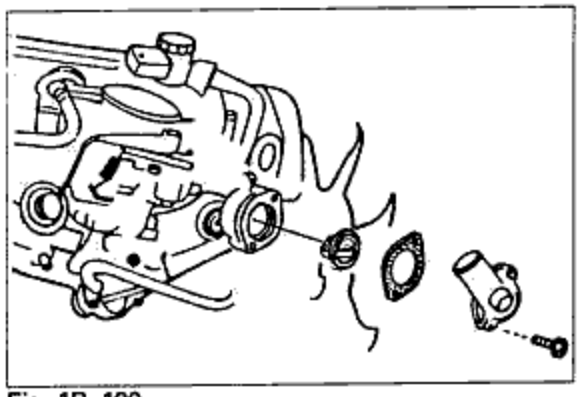

Fig. 1B-120

3. Install the upper water hose.

   Caution:
   The coolant outlet and water hose matching marks should be matched.

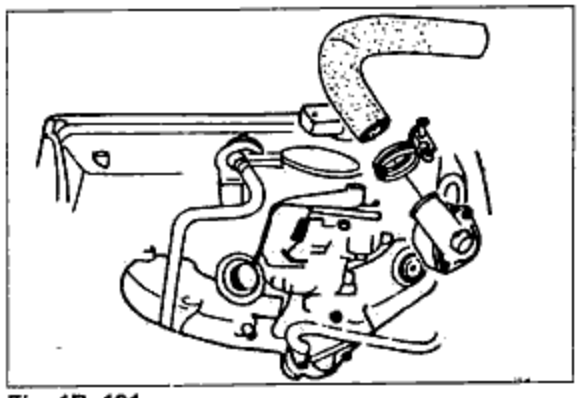

Fig. 1B-121

◆ DISTRIBUTOR

1. Apply the O-ring with engine oil, and position it on the distributor.
2. Match the distributor housing and drive gear matching marks, and install to the front housing assembly with the marks facing straight up. Apply the drive gear with engine oil.
3. The distributor installing bolts should be loosely tightened.

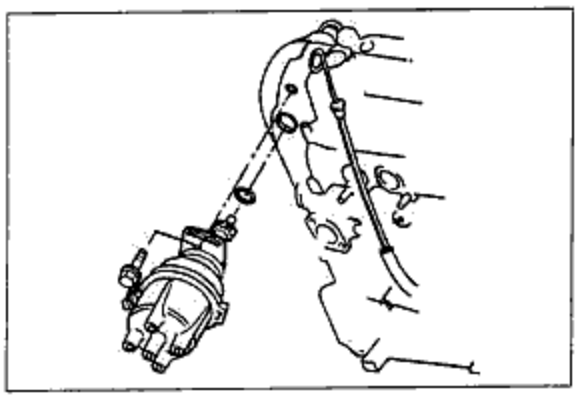

Fig. 1B-122

◈ SPARK PLUGS AND SPARK PLUG CABLES

1. Install the spark plugs.
   Tightening torque: 1.5 to 2.3kg·m(10.9 to 16.8ft·lb)
2. Install the spark plug cables.

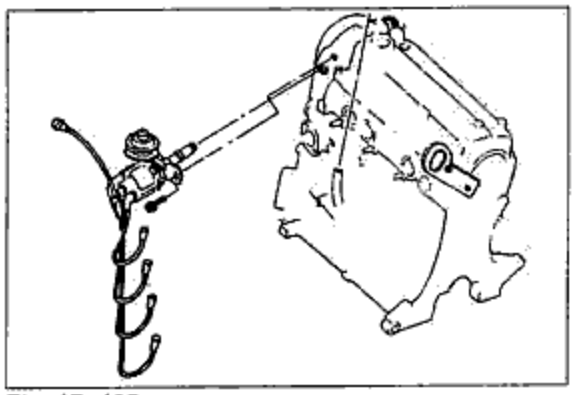

Fig. 1B-123

◈ INLET MANIFOLD (COMPLETE)

1. Install the inlet manifold, together with a gasket.
   Tightening torque: 1.9 to 2.6kg·m(13.8 to 18.9ft·lb)

◈ WATER BY-PASS HOSE ASSEMBLY

1. Install the water by-pass hose assembly.

Cautions:
- Hose clamps should face in the same direction.
- Apply a coating of vegetable oil to the o-ring before installation.

Tightening torque: 1.9 to 3.1kg·m(13.8 to 22.6ft·lb)

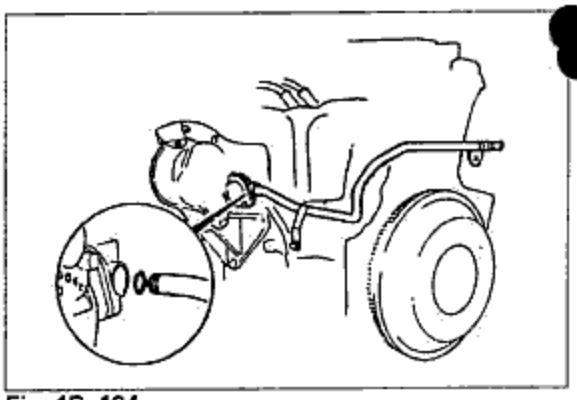

Fig. 1B-124

◈ INLET PIPE ASSEMBLY AND LOWER WATER HOSE

1. Install the inlet pipe assembly, together with gaskets.
   Inlet pipe assembly tightening torques:
   Water pump(complete) side:
   1.9 to 2.6kg·m(13.8 to 18.9ft·lb)
   Engine bracket No.3 side:
   3.8 to 5.3kg·m(27.7 to 38.6ft·lb)

Caution:
- Be sure there is no oil, grease, or dirt on the gaskets or contact surfaces.

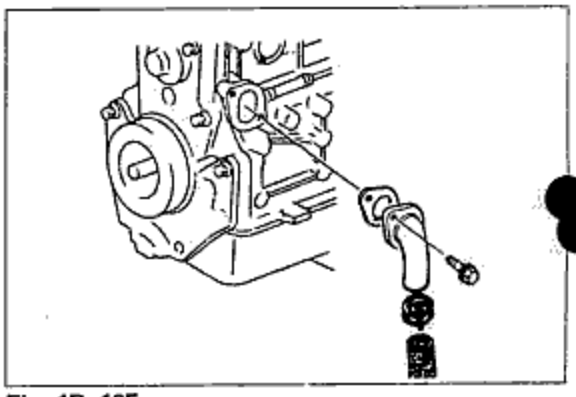

Fig. 1B-125

◈ EXHAUST MANIFOLD AND AIR INJECTION PIPES

1. Install the exhaust manifold, together with a gasket.
   Tightening torque: 2.2 to 2.9kg·m(16.0 to 21.1ft·lb)

2. Install each part as shown in the figure.

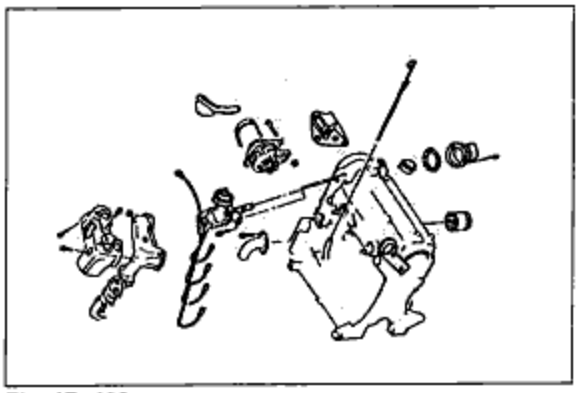

Fig. 1B-126

◈ ALTERNATOR STRAP, BRACKET AND ALTERANATOR

NOTE

The parts, arrangement, and adjustment values related to the alternator are different for vehicles equipped with power steering and/or an air conditioner. The following information is for standard models only. (Refer to section 5 for information concerning models with power steering and/or an air conditioner)

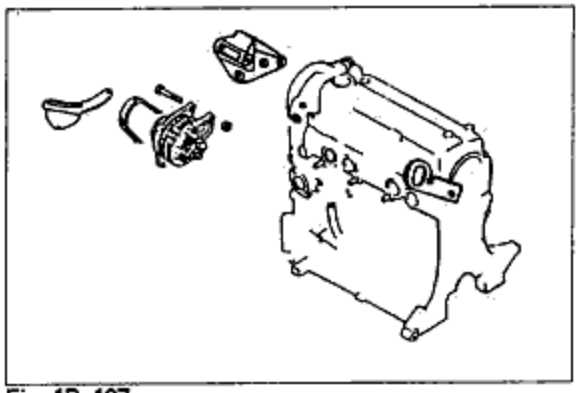

Fig. 1B-127

1. Install the alternator bracket.
   Tightening torque: 3.8 to 6.4kg·m(27 to 46ft·lb)
2. Install the alternator strap.
   Tightening torque: 1.9 to 3.0kg·m(13.7 to 21.9ft·lb)
3. Install the alternator and clip.
4. Install the V-ribbed belt, and then move the alternator to adjust so that the deflection is the specified amount when a force of 10kg (22.0 lb) is applied halfway between the crankshaft pulley and the alternator pulley.

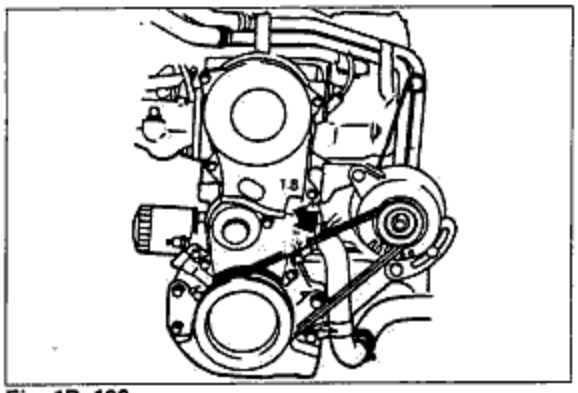

Fig. 1B-128

V-ribbed belt deflection

New belt:	6 to 8mm(0.24 to 0.31in)
Adjustment of old belt:	10 to 12mm(0.39 to 0.47in)

Caution:

When the belt is removed(if it is to be reused) or when replacing the pulley, allow the engine to idle for five minutes and then set the deflection to the standard value specified above.

◆ ENGINE MOUNTS

1. Install the engine mounting bracket
   Tightening torque: 3.8 to 5.3kg·m(27.7 to 38.6ft·lb)

2. Install the engine torque stopper casing assembly.
   Tightening torque: 3.8 to 5.3kg·m(27.7 to 38.6ft·lb)

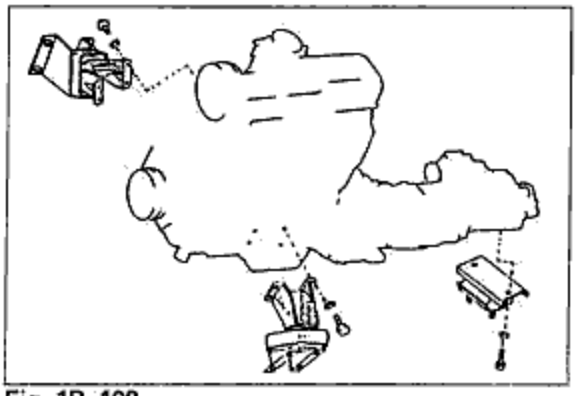

Fig. 1B-129

LUBRICATION SYSTEM 2A

- **OUTLINE** ..... **2A—2**
  - OUTLINE OF CONSTRUCTION ..... 2A—2
  - FLOW CHART ..... 2A—2
- **SPECIFICATIONS** ..... **2A—3**
  - RECOMMENDED SAE VISCOSITY NUMBERS ..... 2A—4
- **TROUBLESHOOTING GUIDE** ..... **2A—4**
- **INSPECTION** ..... **2A—5**
  - CHECKING OIL PRESSURE ..... 2A—5
- **OIL BYPASS FILTER** ..... **2A—5**
  - REPLACEMENT ..... 2A—5
- **OIL PAN** ..... **2A—7**
  - REMOVAL AND INSTALLATION ..... 2A—7
- **OIL PUMP** ..... **2A—9**
  - REMOVAL AND INSTALLATION ..... 2A—9
- **OIL COOLER** ..... **2A—11**
  - REMOVAL AND INSTALLATION ..... 2A—11
  - DISASSEMBLY AND ASSEMBLY ..... 2A—12
- **OIL JET** ..... **2A—13**
  - REMOVAL AND INSTALLATION ..... 2A—13

OUTLINE

OUTLINE OF CONSTRUCTION

1. The oil pump is the crescent type, and directly driven by the crankshaft.
2. The oil bypass filter is equipped to eliminate carbon, etc. in the engine oil and improve efficiency.
3. The oil filter relief valve is equipped in the oil filter body, just as is within the oil filter, in order to protect the engine if the oil filter becomes clogged, at that time oil pressure warning light operates to warn the driver.
4. The water–cooled oil cooler is equipped.
5. The oil jets are provided to cool the pistons.

FLOW CHART

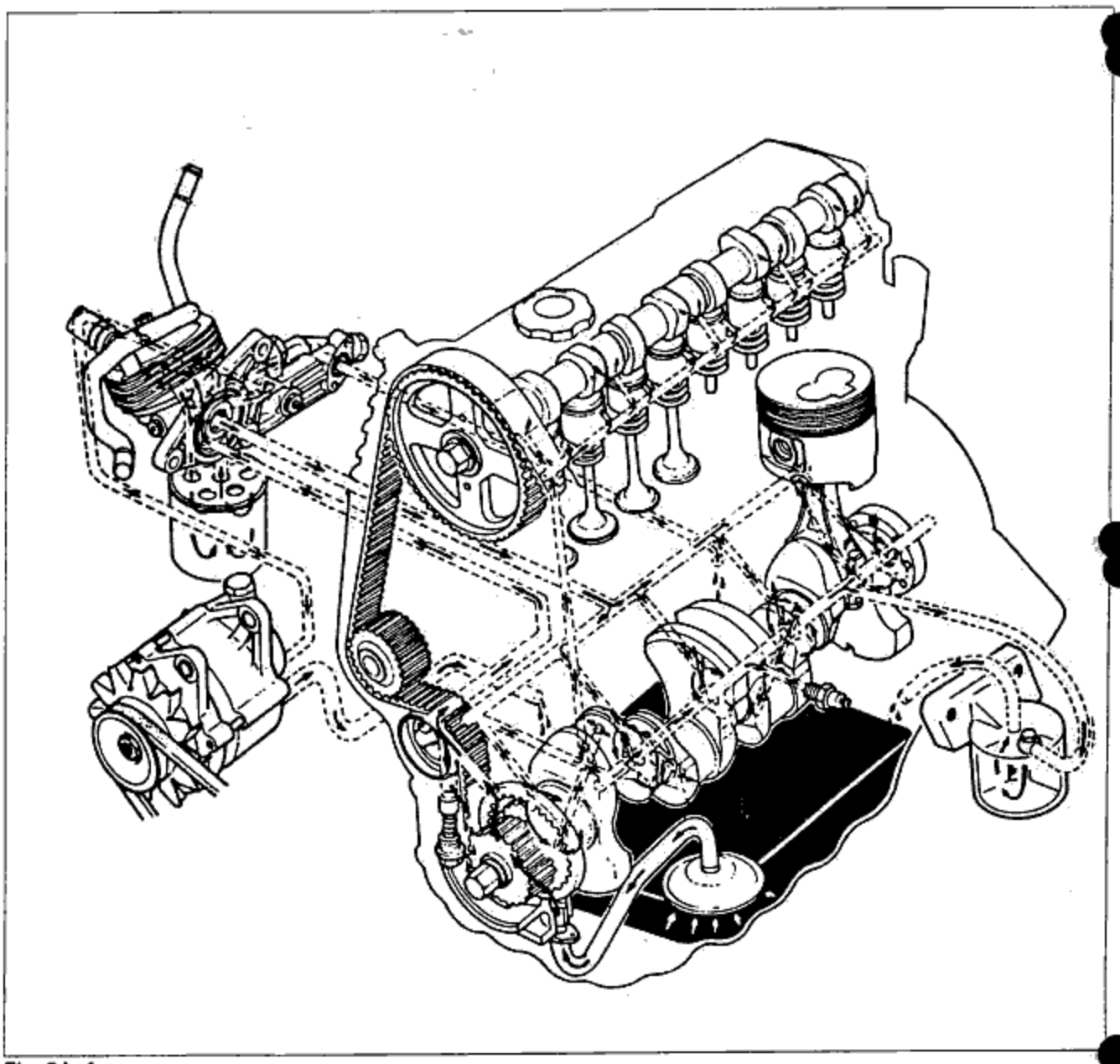

Fig. 2A-1

⊠ SPECIFICATIONS

LUBRICATION SYSTEM		FORCE–FED TYPE
Oil pump	Type	Crescent inner gear type
	Oil pressure control valve opening pressure	8.0kg/cm²(114lb/in²)
Oil filter	Type	Full-flow type, paper filter
	Oil filter relief valve opening pressure	1.0kg/cm²(14lb/in²)
Oil bypass filter	Type	Full-flow type, paper filter
Oil cooler	Type	Water cooled type
Oil filter body	Oil pressure control valve opening pressure	4.5kg/cm²(64lb/in²)
	Oil filter relief valve opening pressure	Different pressure 1.0kg/cm²(14lb/in²)
	Oil cooler relief valve opening pressure	Different pressure 2.0kg/cm²(28lb/in²)
Oil warning lamp activation pressure		0.3kg/cm²(4.3lb/in²)
Total oil capacity		6.4 liters(6.76U.S. quarts, 5.63Imp.quarts)
Oil pan capacity		5.0 liters(5.28U.S. quarts, 4.40Imp.quarts)
Oil filter capacity		0.4 liters(0.42U.S. quarts, 0.35Imp.quarts)
Oil bypass filter capacity		0.4 liters(0.42U.S. quarts, 0.35Imp.quarts)
Engine oil		API service CC and CD

◆ RECOMMENDED SAE VISCOSITY NUMBERS

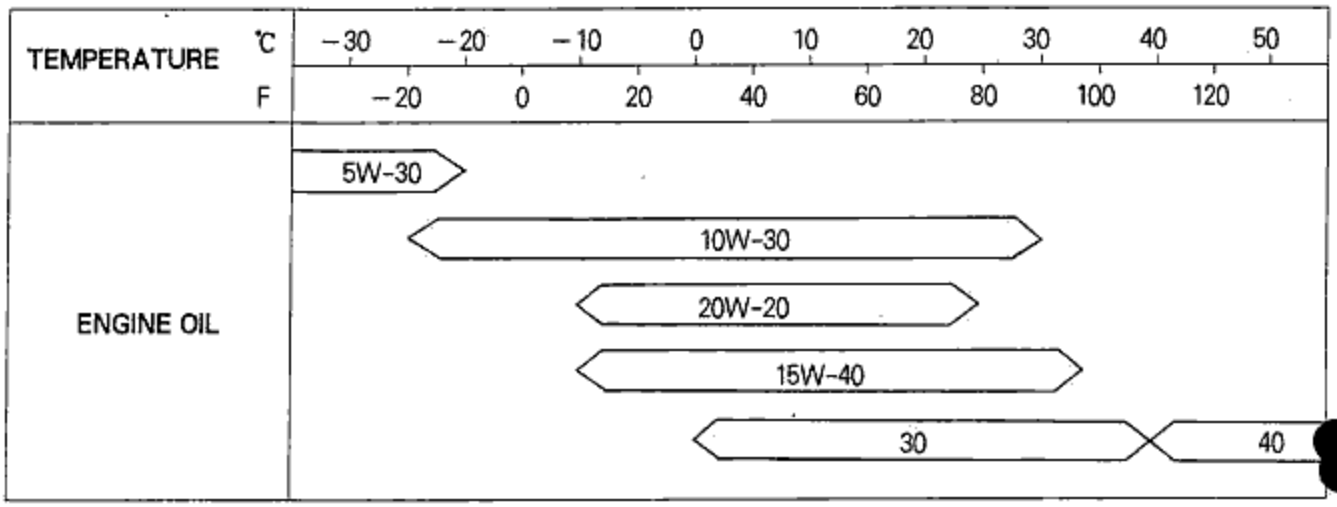

Temperature range anticipated before next oil change, ℃(°F)

◇ TROUBLESHOOTING GUIDE

Problem	Possible Cause	Correction
Oil leakage	Loosened drain plug	Tighten or replace
	Faulty seal at oil pan and cylinder block	Repair
	Damaged cylinder head cover	Replace
	Loosened oil pump body bolt, cylinder head cover bolt, or oil pan bolt	Tighten
	Damaged front housing gasket, or cylinder head gasket	Replace
	Faulty oil seal(s)	Replace
	Loosened oil filter	Tighten
	Loosened or damaged oil pressure switch	Tighten or replace
Oil pressure drop	Oil leak	As described above
	Insufficient oil	Add oil
	Worn and/or damaged oil pump gear	Replace
	Worn plunger(inside oil pump) or weak spring	Replace
	Clogged oil strainer	Clean it
Warning lamp illuminates while engine is running	Oil pressure drop	As described above
	Malfunction of oil pressure switch	Repair
	Problem in electrical system	Repair

INSPECTION

CHECKING OIL PRESSURE

1. Disconnect the vacuum pump oil hose.

NOTE

Let the engine oil drain into a suitable container.

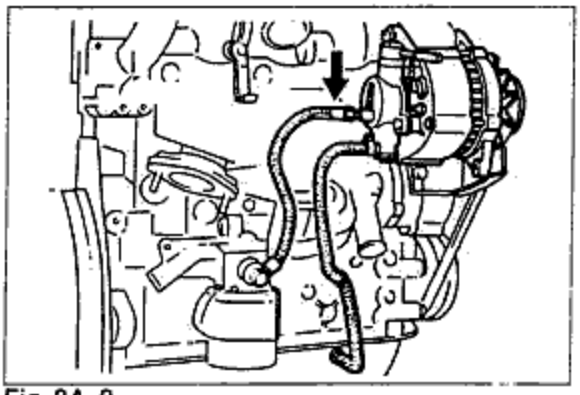

Fig. 2A-2

2. As shown in the figure, install the **oil pressure gauge adaptor** and the **oil pressure gauge.**
3. Start the engine and let it warm up thoroughly.
4. Maintain engine rpm at **3,000** and note the gauge reading.

   Oil pressure:

   4.1~4.9kg/cm²(58~70lb/in²)
5. If the pressure does not come up to specified pressure, check each part, and repair if necessary.(Refer to the troubleshooting guide).

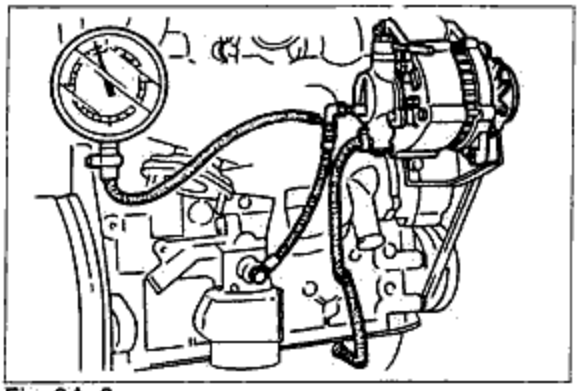

Fig. 2A-3

OIL BYPASS FILTER

REPLACEMENT

1. Remove the oil bypass filter with a suitable wrench.
2. Use a clean rag to wipe off the mounting surface on the engine.

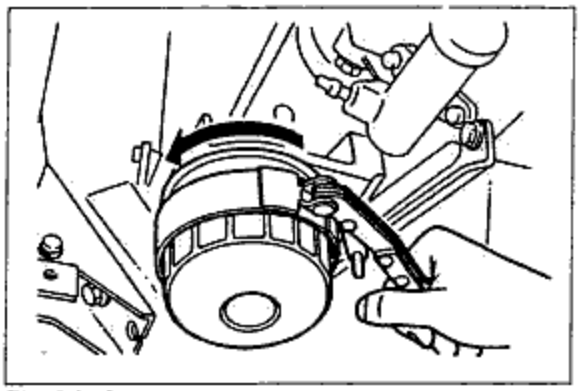

Fig. 2A-4

3. Apply engine oil to the rubber seal on the new oil bypass filter.

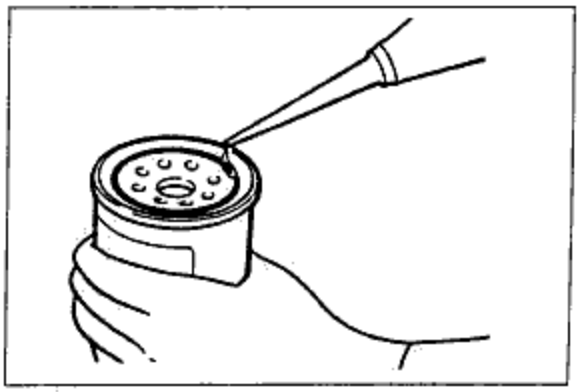

Fig. 2A-5

4. Install the oil bypass filter and tighten it fully by hand.

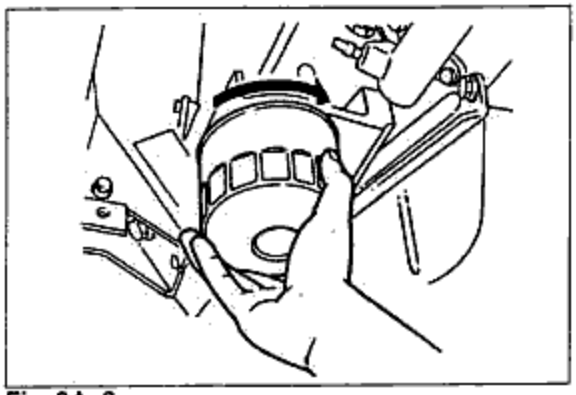

Fig. 2A-6

5. Tighten it a **2/3 turn farther** with a suitable wrench, preferably a band—type.

Caution

Avoid using a chain-type wrench, which may deform the oil bypass filter.

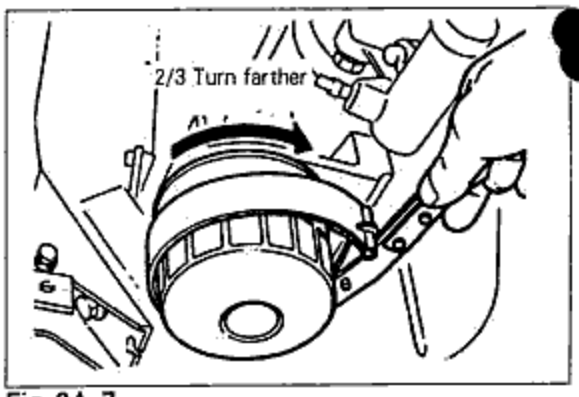

Fig. 2A-7

6. Start the engine and inspect for leaks around the oil bypass filter seal. Check the oil level and fill to the F mark if necessary.

Oil bypass filter capacity:
0.40 liter(0.42 U.S.qt, 0.35Imp.qt)

OIL PAN

REMOVAL AND INSTALLATION

Jack up the vehicle and support it with safety stands. Disconnect the battery negative cable. After draining the engine oil, remove the parts in the numbered order shown in the figure. Installation is the reverse order of removal.

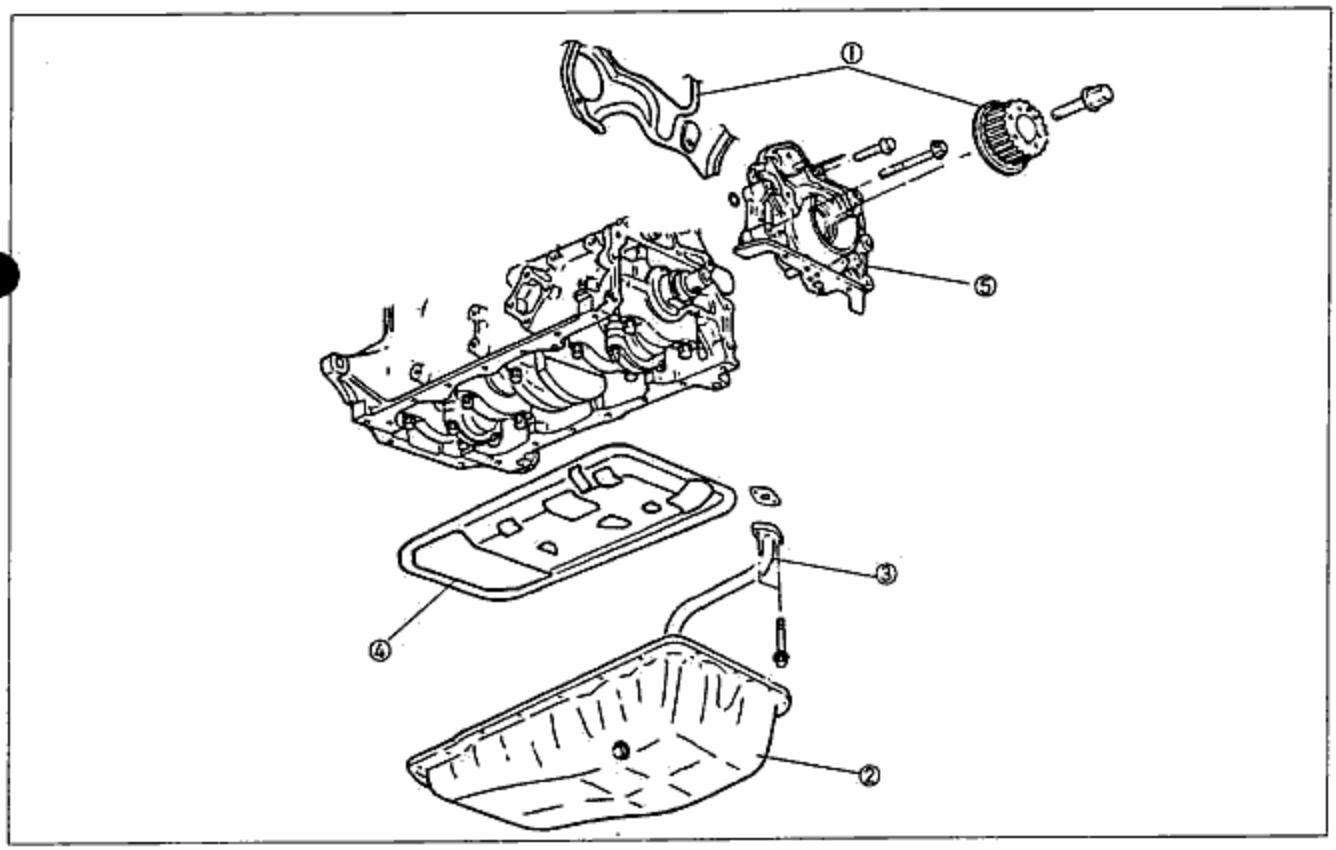

Fig. 2A-8

1. Timing belt pulley
2. Oil pan
3. Oil strainer
4. Oil baffle plate
5. Oil pump

Removal

1. Insert a flat-tipped scraper between the oil pan and the oil baffle plate to separate them and remove the oil pan.

Caution

Do not insert a flat-tipped scraper between the oil baffle plate and cylinder block.

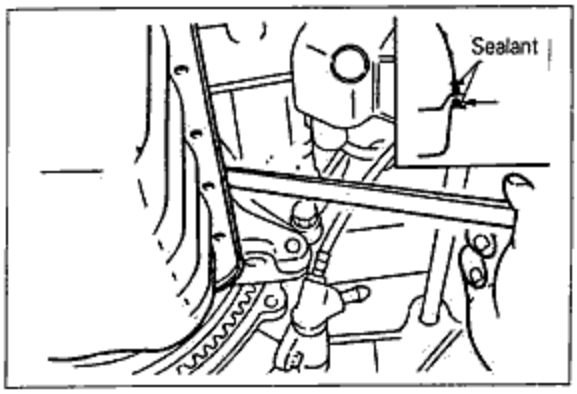

Fig. 2A-9

2. Remove the oil strainer from the cylinder block.

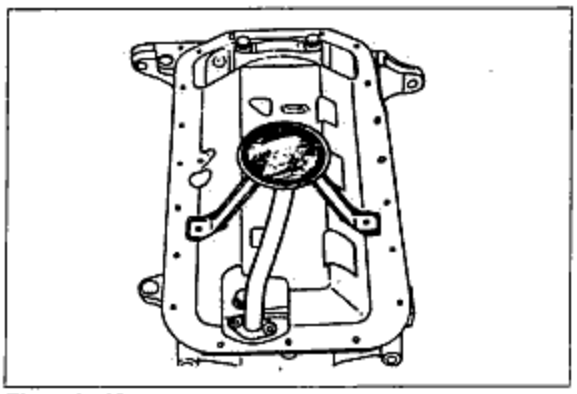

Fig. 2A-10

3. Remove the oil baffle plate from the cylinder block.

NOTE

Avoid damage to the oil baffle plate.

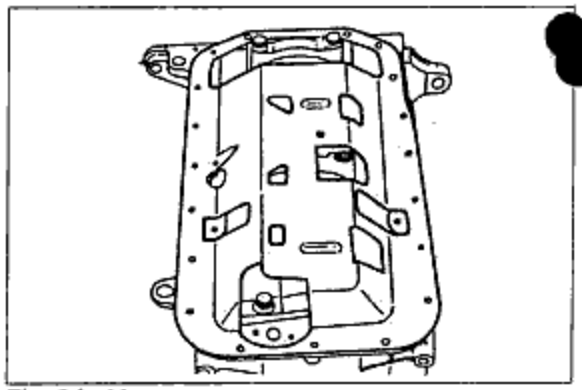

Fig. 2A-11

Inspection

Check the following points. Repair or replace if necessary.

1. Cracks, deformation, damage.(at bolt locations)
2. Damaged drain plug threads.

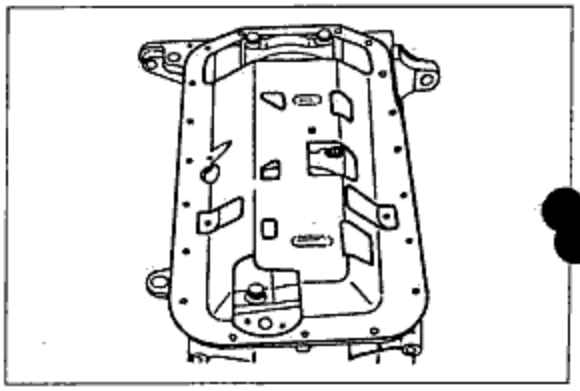

Fig. 2A-12

Installation

Installation is the reverse order of removal.

NOTE

Before installation, clean the oil baffle plate and oil pan.

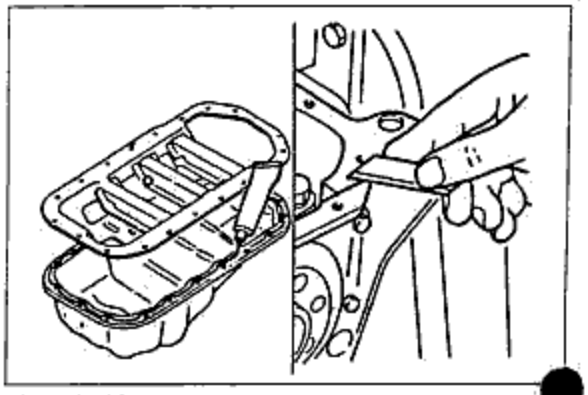

Fig. 2A-13

OIL PUMP

REMOVAL AND INSTALLATION

Removal the oil pump in the numbered order shown in the figure. Installation is the reverse order of disassembly.

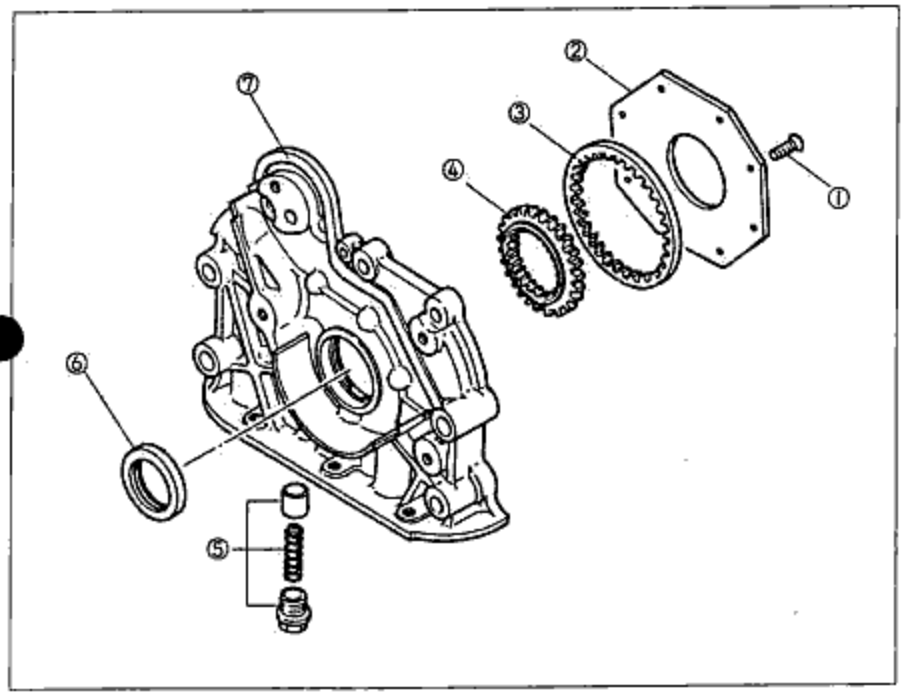

1. Screws
2. Oil pump cover
3. Outer gear
4. Inner gear
5. Oil pressure control valve assembly
6. Oil seal
7. Oil pump body

Fig. 2A-14

Screws

Loosen the screws by tools, such as impact drivers so that the oil pump body is not damaged.

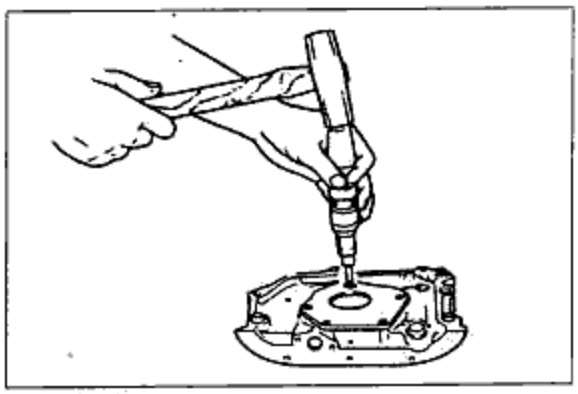

Fig. 2A-15

INSPECTION

Check the following points. Repair or replace if necessary.

1. Distortion or damage to pump body or cover
2. Worn or damaged plunger
3. Weak or broken plunger spring
4. Measure gear clearances.

Outer gear tooth tip and crescent clearance limit:
0.35mm(0.013in)
Inner gear tooth tip and crescent clearance limit:
0.35mm(0.013in)

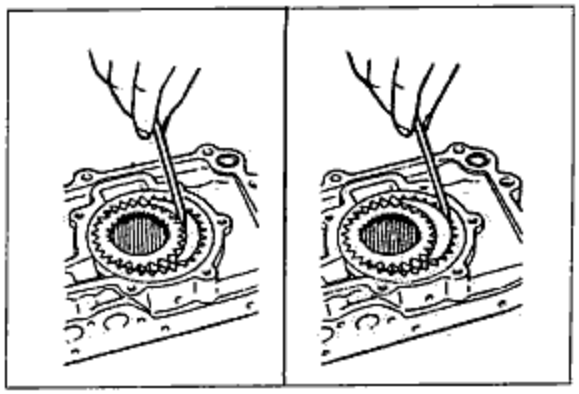

Fig. 2A-16

5. Measure the side clearance.

Limit: 0.15mm(0.006in)

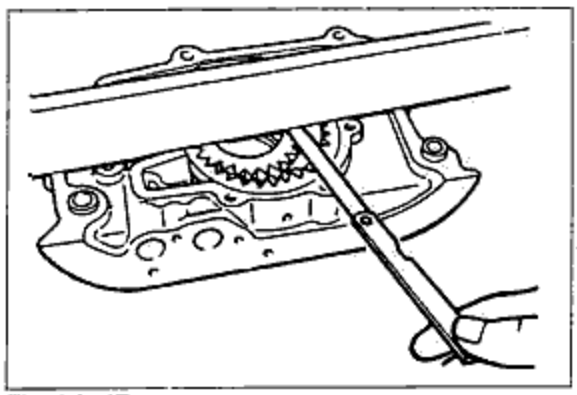

Fig. 2A-17

6. Measure the body clearance.

Outer gear to pump body clearance limit:
0.20mm(0.008in)

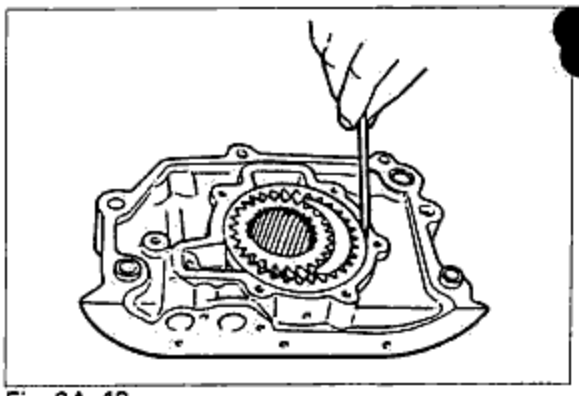

Fig. 2A-18

Oil seal replacement

1. Removal
   Remove the oil seal by using a screwdriver or similar tool to pry it out.
2. Installation
   Press in the oil seal by using a pipe or round rod with an outer diameter of 45mm(1.77in)

Caution

Press the oil seal in until the front end is aligned with the front end of the pump body.

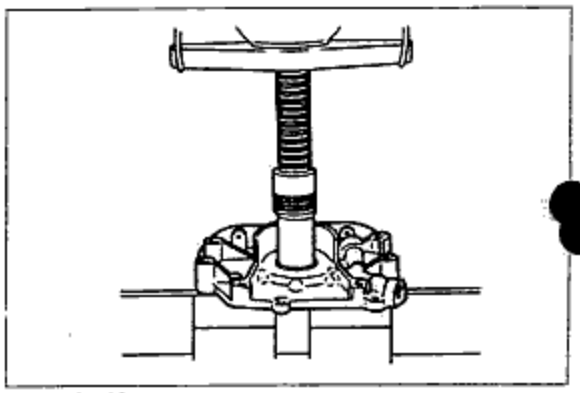

Fig. 2A-19

Before installation

1. Apply a thin coating of grease to the O-ring, and attach it at the position shown in the figure.
2. Apply a coat of sealant to the oil pump installation surface shown in the figure.

NOTE

Be careful not to let sealant get into the oil hole.

3. Coat the oil seal lip with engine oil, and then install the seal, taking care not to damage the lip.

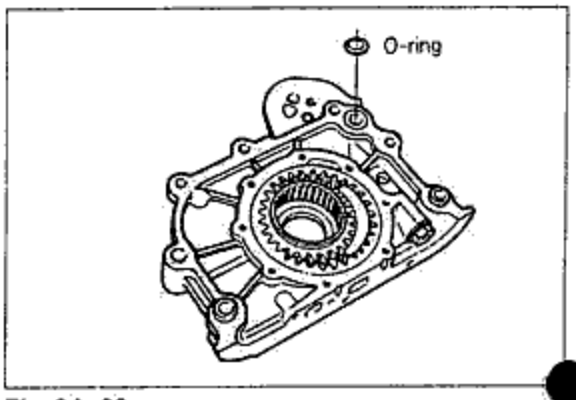

Fig. 2A-20

OIL COOLER

REMOVAL AND INSTALLATION

Disconnect battery negative cable. Drain coolant into a suitable container. Remove each part in the numbered sequence shown in the figure. Installation is in the reverse order of removal.

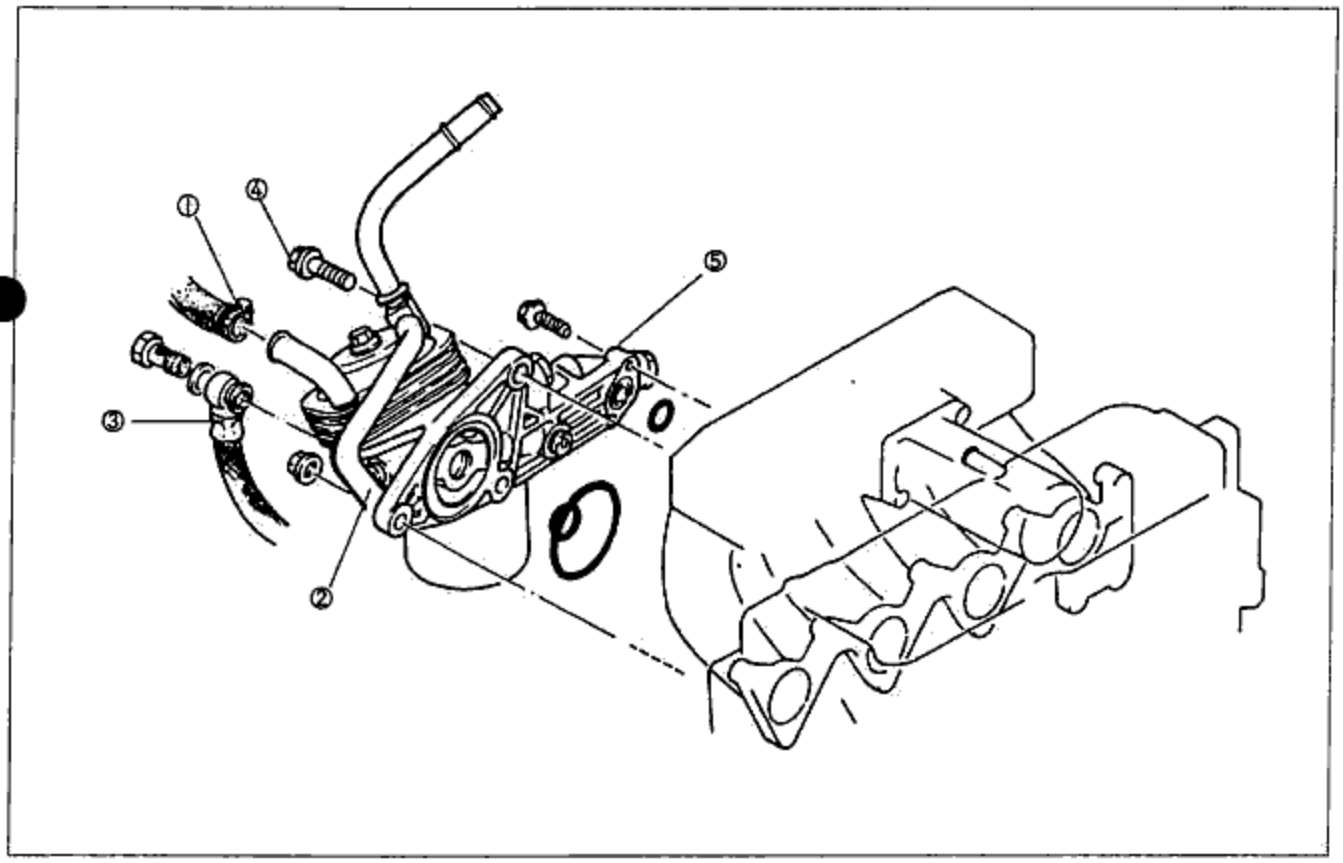

Fig. 2A-21

1. Coolant hoses
2. Oil cooler pipe
3. Vacuum pump oil hose
4. Oil cooler and oil filter assembly attaching bolts and nuts
5. Oil cooler and oil filter assembly

1. Drain the coolant.
2. Remove the oil hose (between oil and vacuum pump) to the filter.

CAUTION

Take care not to leak oil.

3. Remove the two water hose on the oil cooler.
4. Loosen the bolts shown in the figure and remove the oil cooler and oil filter assembly.
5. Install in the reverse order of the removal and fill coolant and oil after installation.

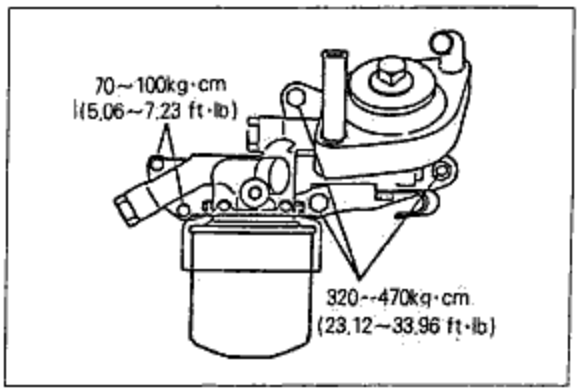

Fig. 2A-22

◈ DISASSEMBLY AND ASSEMBLY

Disassembly each part in the numbered sequence shown in the figure. Assembly is in reverse order of disassembly.

Caution

O-ring must be replaced with new ones, and apply engine oil to the new O-rings.

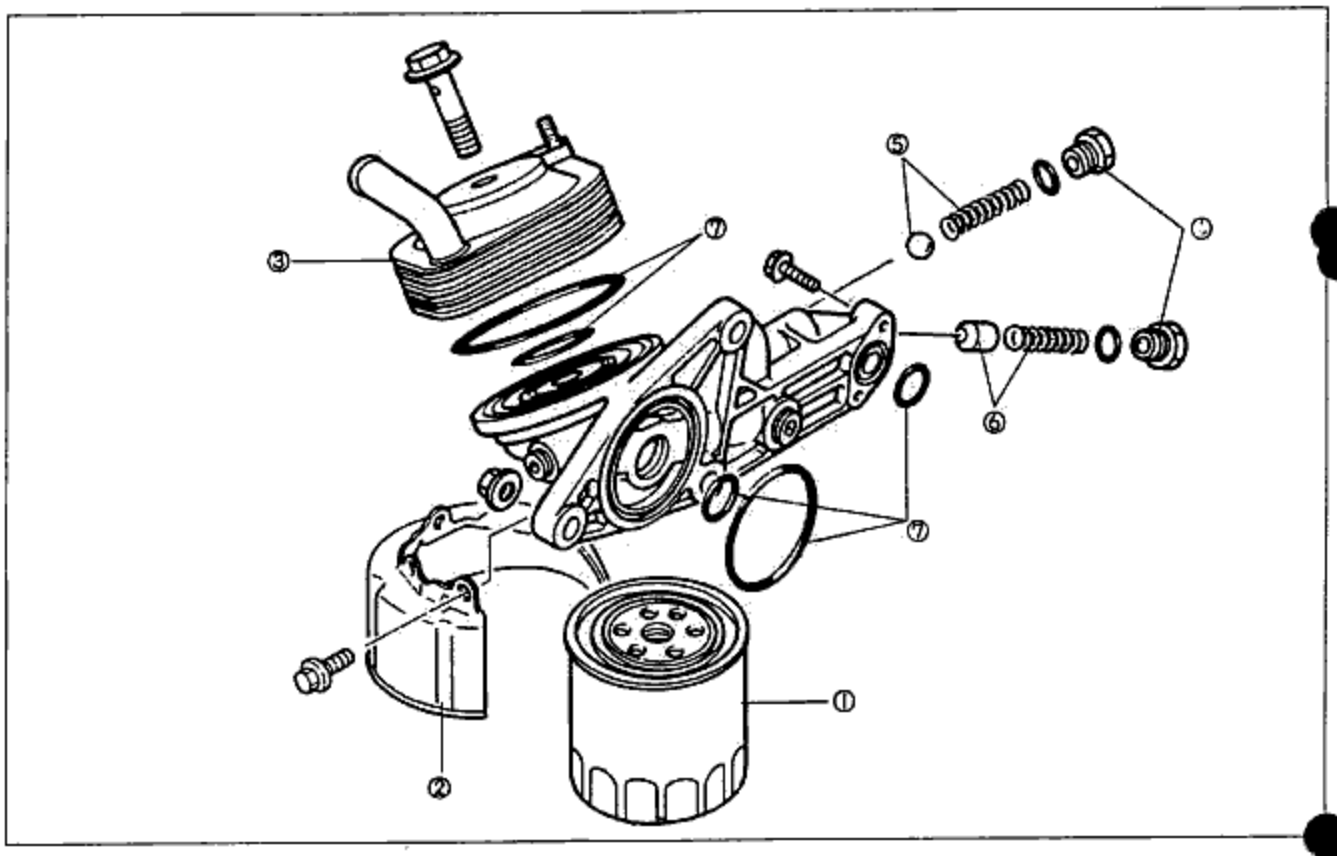

Fig. 2A-23

1. Oil filter
2. Oil filter cover
3. Oil cooler
4. Plugs
5. Oil cooler relief valve
6. Oil pressure control valve
7. O-rings

Oil cooler

When installing the oil cooler, align the oil cooler holes and the projections of the oil filter body.

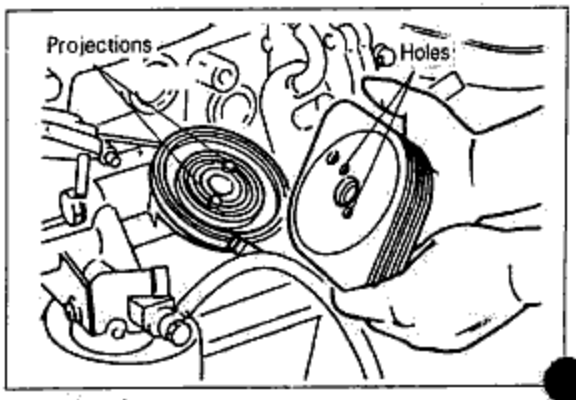

Fig. 2A-24

⊠ OIL JET

◈ REMOVAL AND INSTALLATION

Remove each part in the following order. Installation is in reverse order of removal.

1. Remove the oil pan.
2. Remove the oil jet valves.
3. Remove the oil jets.

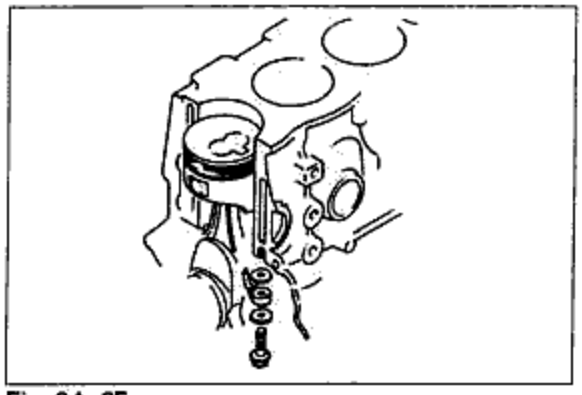

Fig. 2A-25

INSPECTION

1. Make sure that the oil passage is not clogged.
2. Check and ensure that the spring incorporated in the oil jet valve is not stuck or damaged.

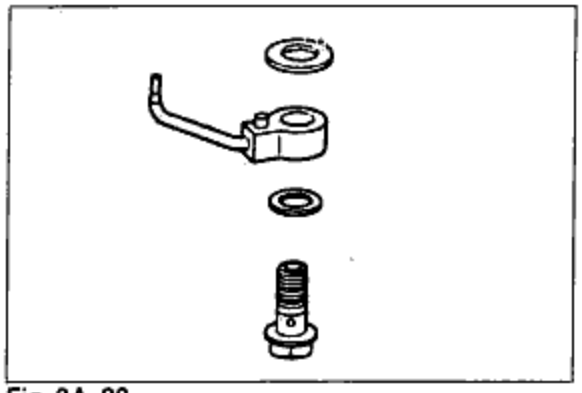

Fig. 2A-26

MEMO

LUBRICATION SYSTEM

2B

- **FLOW CHART** ..... **2B—2**
- **SPECIFICATIONS** ..... **2B—3**
  - RECOMMENDES SAE VISCO NUMBER ..... 2B—3
- **TROUBLESHOOTING GUIDE** ..... **2B—3**
- **OIL FILTER** ..... **2B—3**
  - REPLACEMENT ..... 2B—3
- **OIL PAN** ..... **2B—4**
  - REMOVAL AND INSTALLATION ..... 2B—4
  - DISASSEMBLY, ASSEMBLY AND INSPECTION ..... 2B—4
- **OIL PUMP** ..... **2B—5**
  - REMOVAL AND INSTALLATION ..... 2B—5
  - DISASSEMBLY AND ASSEMBLY ..... 2B—6
  - INSPECTION ..... 2B—6
  - OIL SEAL REPLACEMENT ..... 2B—7
- **OIL PRESSURE** ..... **2B—7**
  - INSPECTION ..... 2B—7

⊠ FLOW CHART

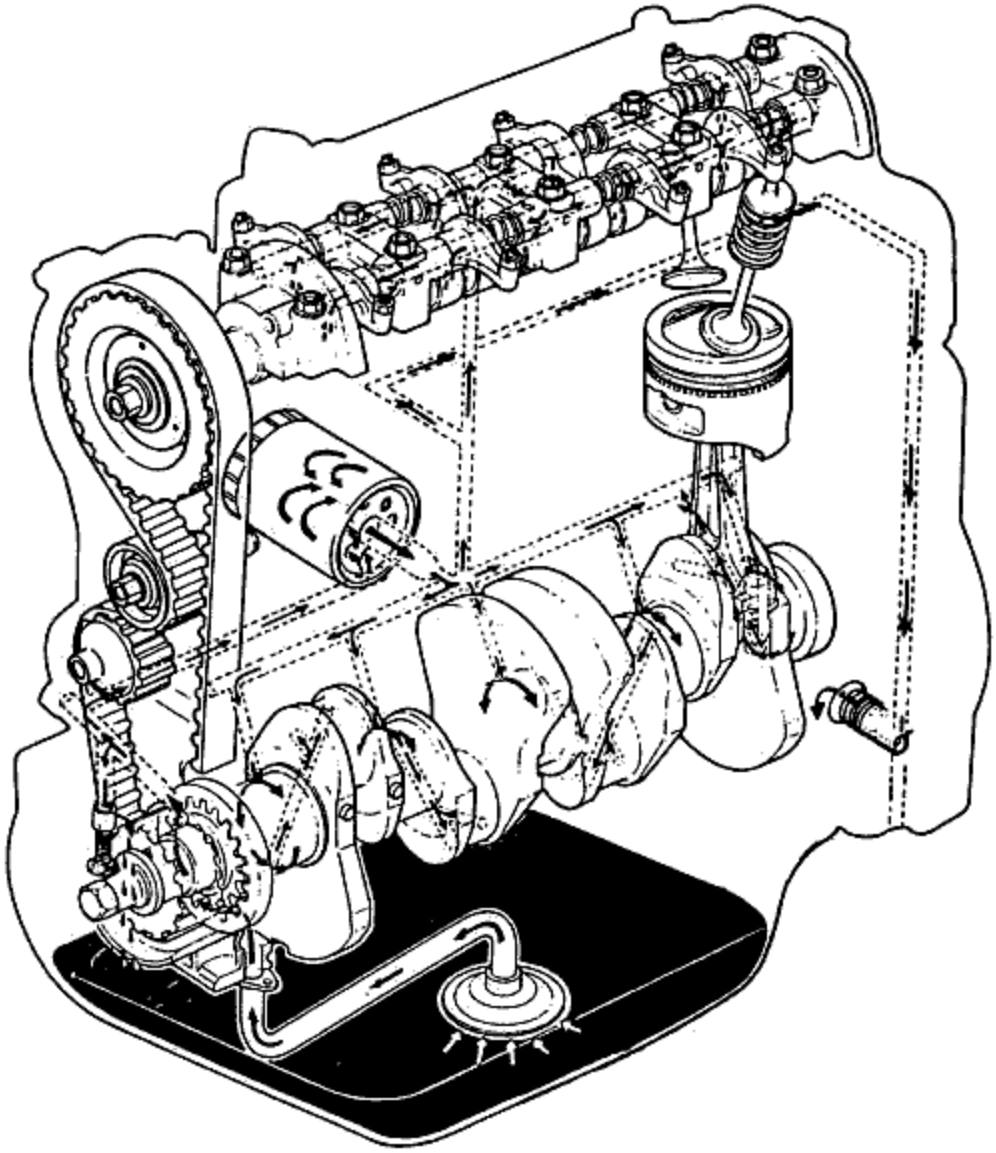

Fig. 2B-1

SPECIFICATIONS

Lubricating system		Force-feed type
Oil pump	Type	Inner gear type
	Pressure-control valve opening pressure	4kg/cm²(57lb/in²)
Oil filter	Type	full-flow type, paper filter
	Relief-valve opening pressure	0.8~1.2kg/cm²(11.4~17.1lb/in²)
Oil warning lamp activation pressure (for vehicles equipped with an oil-pressure switch)		0.3kg/cm²(4.3lb/in²)
Oil pan capacity		3.8 liters
Oil filter capacity		0.3 liters
Engine oil		API service SE, SF

RECOMMENDES SAE VISCOSITY NUMBER

Refer to section 2A.

TROUBLESHOOTING GUIDE

Refer to section 2A.

OIL FILTER

REPLACEMENT

1. Open the engine hood.
2. Remove the oil filter by using a filter wrench.

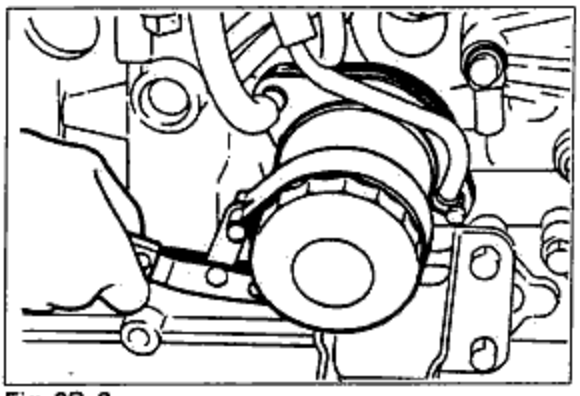

Fig. 2B-2

3. Apply engine oil to the O-ring of the new oil filter.

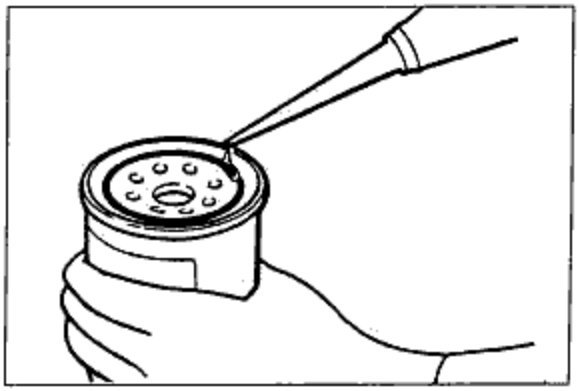

Fig. 2B-3

4. Fully tighten the oil filter by hand.
5. Supply engine oil.
6. After installing the filter, check to be sure that there is no oil leakage while the engine is running.
7. Check the oil level by using the dipstick.

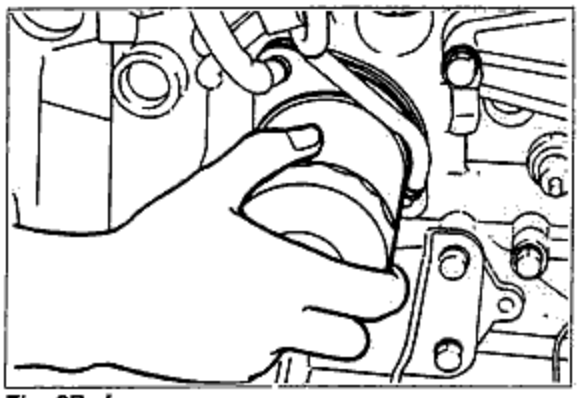

Fig. 2B-4

OIL PAN

REMOVAL AND INSTALLATION

Jack up the vehicle and use safety stands to support it. After draining the engine oil, remove the parts in the numbered order shown in the figure. Installation order is the reverse order of removal.

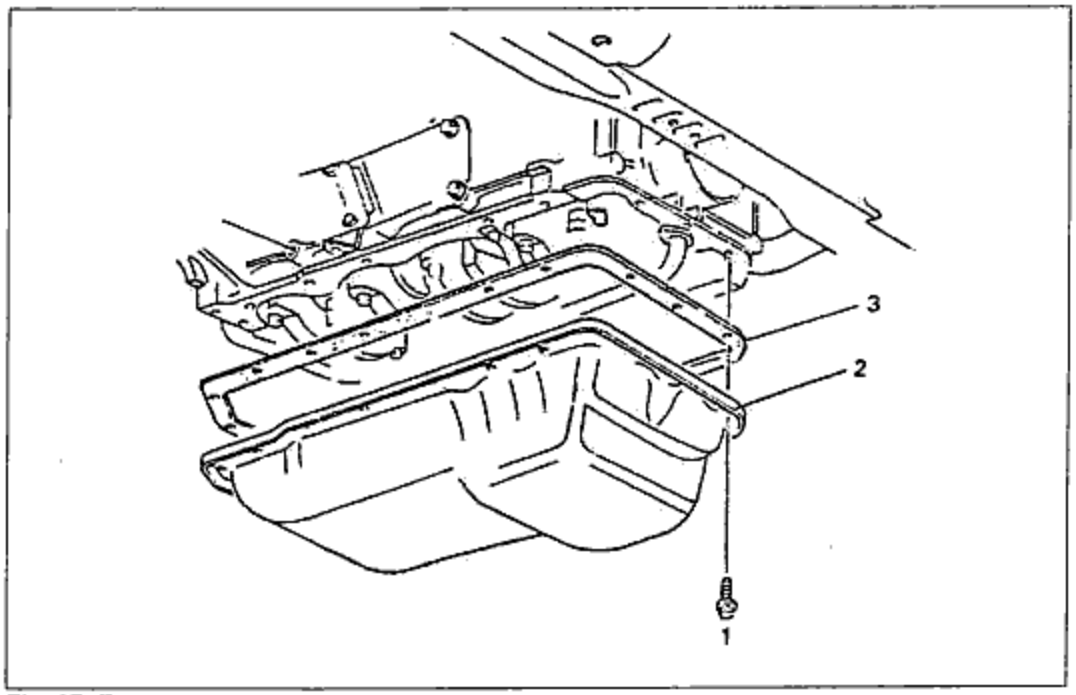

1. Bolt
2. Oil pan
3. Gasket

Fig. 2B-5

Steps after installation

(a) Supply the prescribed amount of oil

(b) Start the engine, and check to be sure that there is no oil leakage from the surface where the oil pan is attached.

DISASSEMBLY, ASSEMBLY AND INSPECTION

Refer to section 2A

OIL PUMP

REMOVAL AND INSTALLATION

Turn the crankshaft so the No.1 cylinder is at top dead center(timing mark).
Jack up the vehicle and support it with safety stands. After draining the engine oil, remove the parts in the numbered order shown in the figure. Installation is the reverse order of removal.

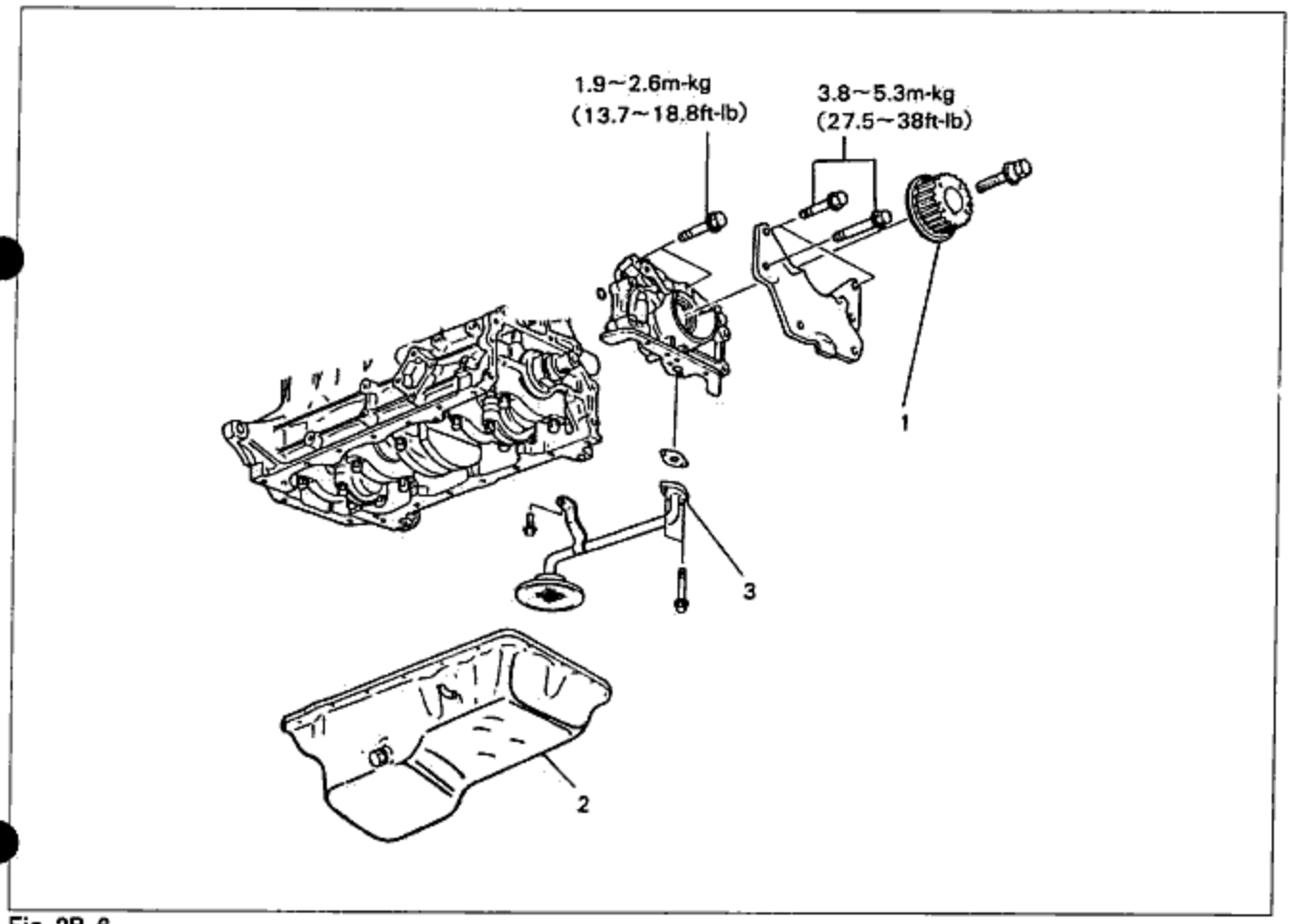

Fig. 2B-6

1. Timing belt clamp pulley 2. Oil pan 3. Oil pump and oil strainer

1. Apply a thin coating of grease to the O-ring, and attach it at the position shown in the figure at the right.
2. Apply a coat of sealant(1016 77 739, or equivalent) to the oil pump installation surface shown in the figure at the right.

NOTE

Be careful not to let sealant get into the oil hole.

3. Coat the oil seal lip with engine oil, and then install the seal, taking care not to damage the lip.

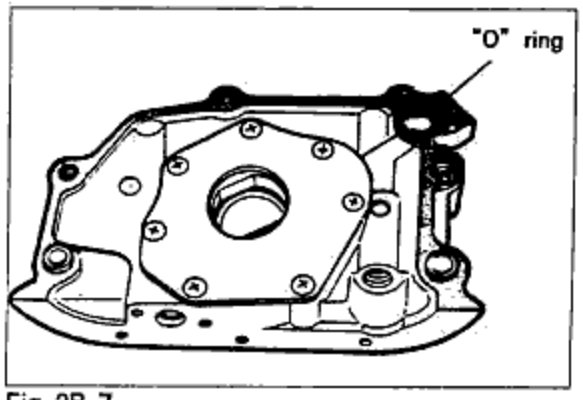

Fig. 2B-7

◈ DISASSEMBLY AND ASSEMBLY

Disassemble the oil pump in the numbered order shown in the figure. Assembly is the revers order of disassembly.

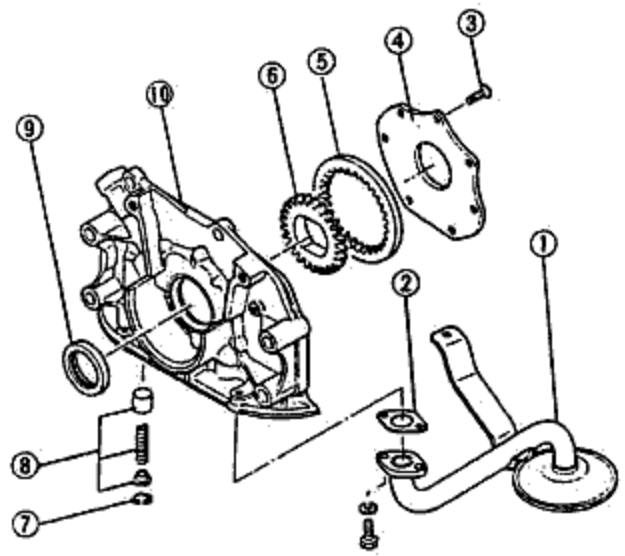

1. Oil strainer
2. Gasket
3. Bolt
4. Pump cover
5. Outer gear
6. Inner gear
7. Snap ring
8. Plunger assembly
9. Oil seal
10. Pump body

Fig. 2B-8

◈ INSPECTION

Check the following points. Repair or replace if necessary.

1. Distortion or damage to pump body or cover
2. Worn or damaged plunger
3. Weak or broken plunger spring
4. Measure the gear clearance.

Outer gear tooth tip and crescent clearance limit	0.35mm(0.014in)
Inner gear tooth tip and crescent clearance limit	0.40mm(0.016in)

5. Measure the side clearance.

Limit	0.10mm(0.004in)

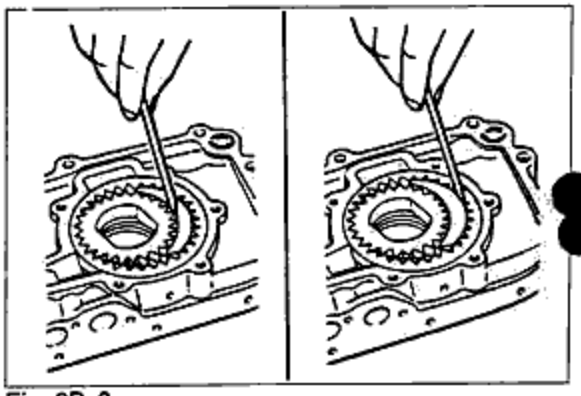

Fig. 2B-9

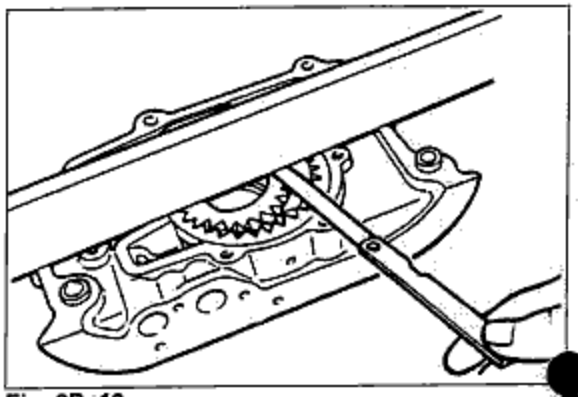

Fig. 2B-10

6. Measure the body clearance.

Outer gear to pump body clearance limit	0.20mm(0.008 in)

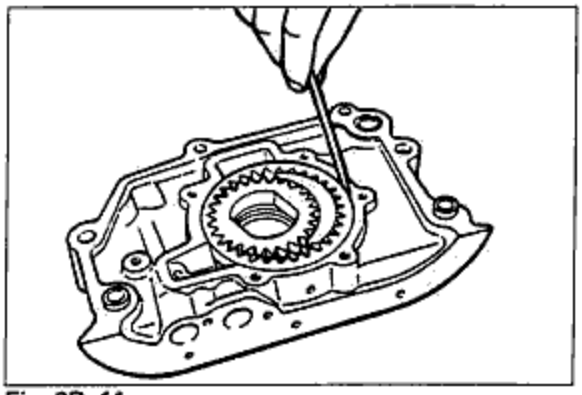

Fig. 2B-11

◈ OIL SEAL REPLACEMENT

Refer to section 2A

◇ OIL PRESSURE

◈ INSPECTION

Refer to section 2A

MEMO

COOLING SYSTEM

3A

- **OUTLINE** ..... **3A—2**
  - STRUCTURAL VIEW ..... 3A—2
  - FLOW CHART ..... 3A—3
- **SPECIFICATIONS** ..... **3A—3**
- **TROUBLESHOOTING GUIDE** ..... **3A—4**
- **COOLANT** ..... **3A—4**
  - CHECKING COOLANT LEVEL ..... 3A—4
  - CHECKING COOLANT LEAKAGE ..... 3A—4
  - REPLACEMENT COOLANT ..... 3A—5
- **THERMOSTAT** ..... **3A—5**
  - REMOVAL AND INSTALLATION ..... 3A—5
  - INSPECTION ..... 3A—6
- **RADIATOR** ..... **3A—6**
  - REMOVAL AND INSTALLATION ..... 3A—6
  - INSPECTION ..... 3A—6
- **RADIATOR CAP** ..... **3A—7**
  - INSPECTION ..... 3A—7
- **WATER PUMP** ..... **3A—7**
  - REMOVAL AND INSTALLATION ..... 3A—7
  - DISASSEMBLY AND ASSEMBLY ..... 3A—8
  - COOLING FAN BEARING ASSEMBLY ..... 3A—8

OUTLINE

STRUCTURAL VIEW

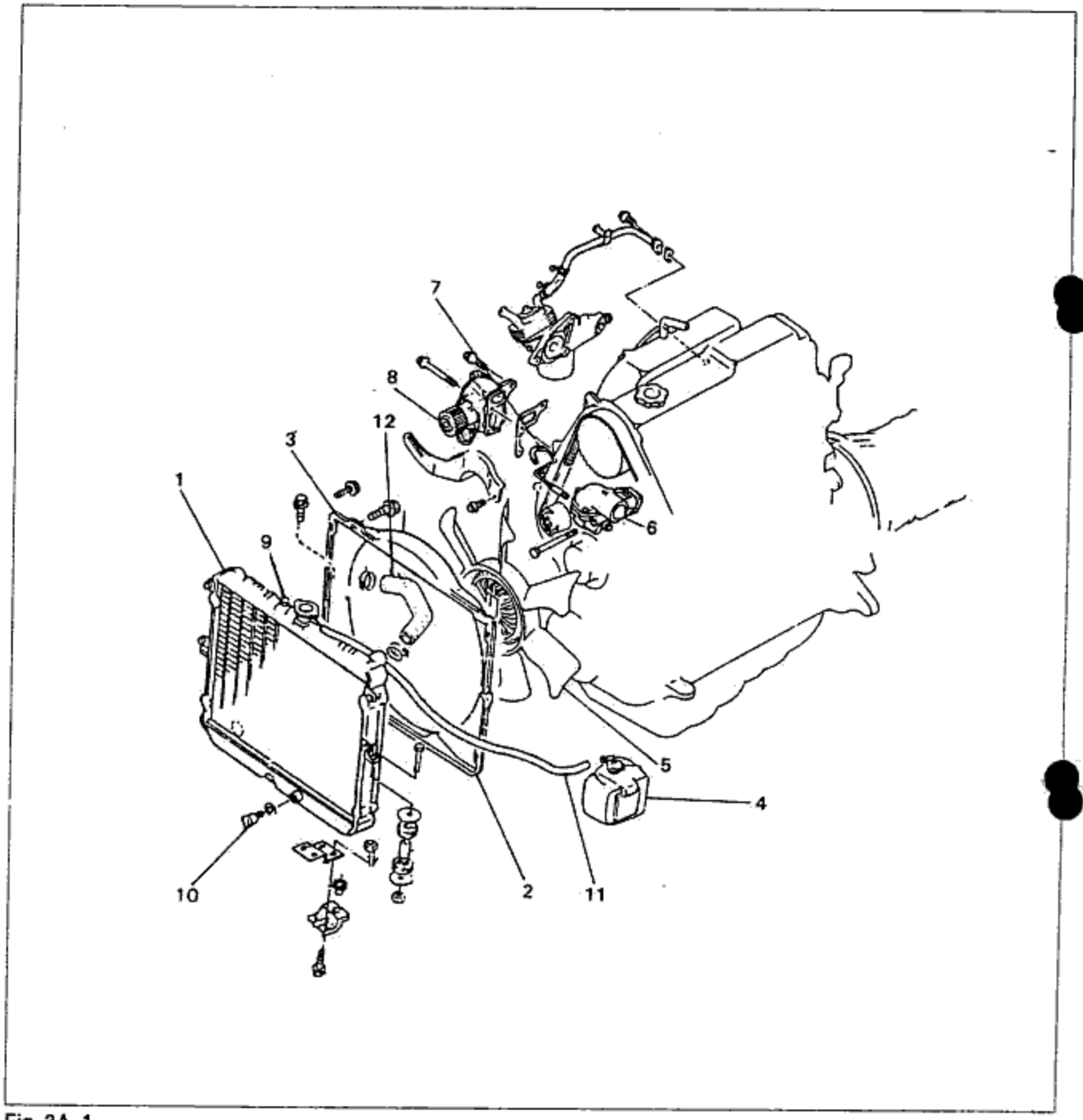

Fig. 3A-1

1. Radiator
2. Cooling fan cover – lower
3. Cooling fan cover – upper
4. Reservoir
5. Cooling fan
6. Thermostat casing Ass'y
7. Bypass hose
8. Water pump
9. Coolant level sensor
10. Water drain cock
11. Reservoir hose
12. Water hose – upper

FLOW CHART

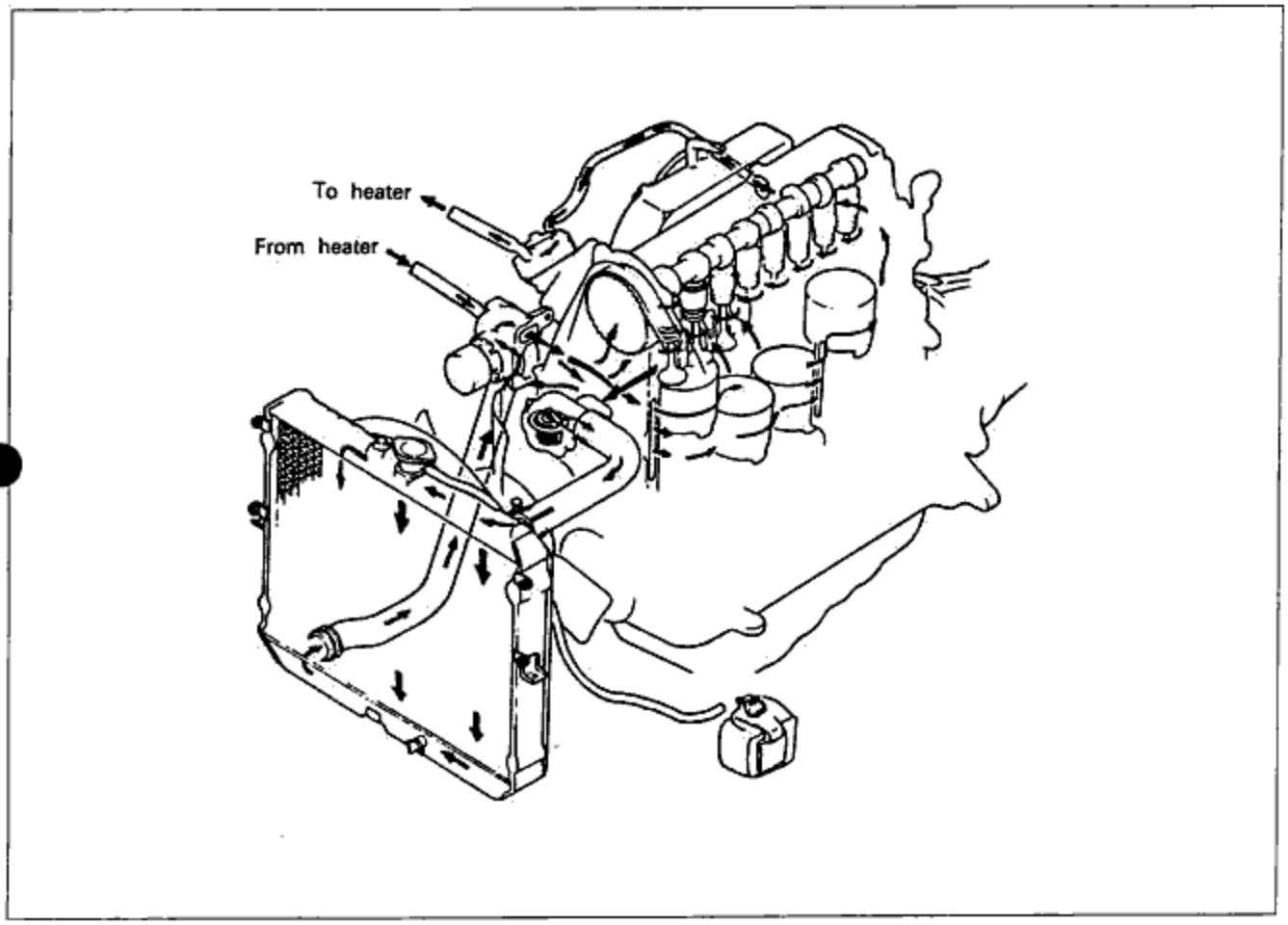

Fig. 3A-2

SPECIFICATIONS

Cooling method		Water—cooled
Coolant capacity	With heater	9.0 liters (9.5 U.S. qt, 7.9 Imp qt)
	Without heater	8.5 liters (9.0 U.S. qt, 7.5 Imp qt)
Thermostat	Type	Wax type
	Opening temprature	82±1.5℃(179.6±34.7°F)
	Full-open temperature	95℃(203°F)
	Full-open lift	8.5mm(0.34in) or more
Water pump	Type	Centrifugal, timing belt driven
Radiator	Type	Corrugated
	Cap valve opening pressure	0.9±0.15kg/cm²(12.8±2.13lb/in²)
Cooling fan	Type	Thermo-modulated
	Number of blades	8
	Outer diameter	380mm(15.0 in)

TROUBLESHOOTING GUIDE

Problem	Possible cause	Correction
Water leakage	Damaged radiator core seam	Replace
	Leakage from radiator hose or heater hose	Repair or replace
	Leakage from water temperature switch	Repair or replace
	Malfunction of water seal(water pump)	Replace
	Damaged or loosened thermostat cover or gasket	Repair or replace
	Loosened cylinder head bolt	Tighten
	Damaged cylinder head gasket	Replace
	Cracked cylinder block	Replace
	Cracked cylinder head	Replace
Corrosion	Impurities in coolant	Clean
Overheating	Clogged water passage	Clean
	Malfunction of thermostat	Replace
	Clogged radiator fins	Clean
	Malfunction of water pump	Repair or replace
	Insufficient coolant	Fill up
	Malfunction of thermo-modulated cooling fan	Replace
	Malfunction of radiator cap	Replace

COOLANT

CHECKING COOLANT LEVEL

While the coolant is cold, check whether the coolant level is near the radiator inlet port, and whether the level in the coolant reservoir is between the FULL and LOW marks. Add coolant if the level is low.

Warning;

Remove the radiator cap at cold engine temperature.

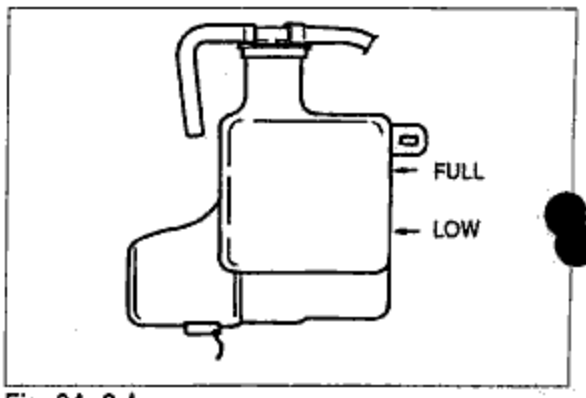

Fig. 3A-3

CHECKING COOLANT LEAKAGE

1. Connect the tester at the radiator inlet port.
2. Apply a pressure of 0.9kg/cm²(12.8 lb/in²) to the tester.
3. Check whether the tester indicator shows a reduction of pressure. If it does, there may be a coolant leak. Locate the leak.

Warning;

When removing either the radiator cap or the tester, loosen it slowly until the pressure in the radiator drops to zero, and then remove it.

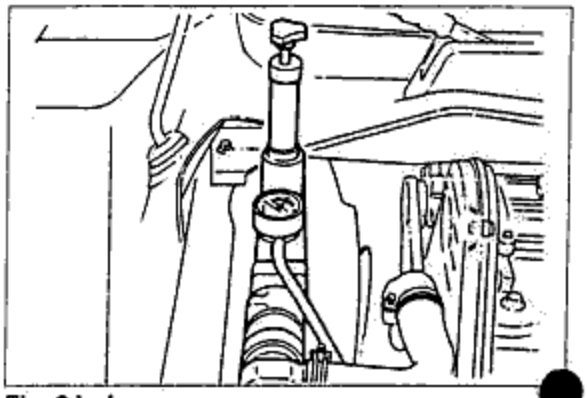

Fig. 3A-4

REPLACEMENT COOLANT

1. Drain the coolant by opening the radiator drain plug.
2. Close the plugs tightly.
3. After pouring anti-freeze into the radiator in accordance with the table below, add soft water.
4. Start the engine, bleed the air from the coolant passages, and then add more coolant.

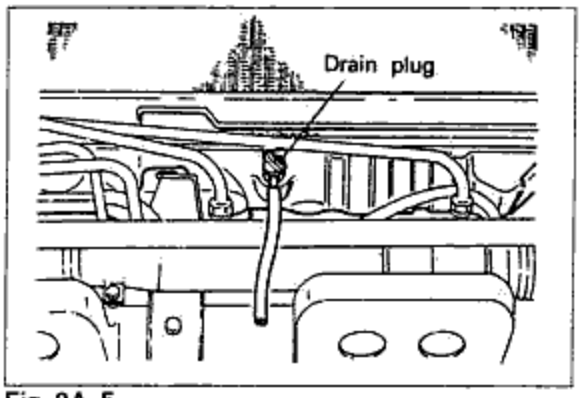

Fig. 3A-5

Anti-freeze solution mixture percentage

Protection	Anti-freeze	Water
Above -16℃(3°F)	35%	65%
Above -26℃(-15°F)	45%	55%
Above -40℃(-40°F)	55%	45%

THERMOSTAT

REMOVAL AND INSTALLATION

After draining the coolant, remove the parts in the numbered order shown in the figure. Installation is the reverse order of removal.

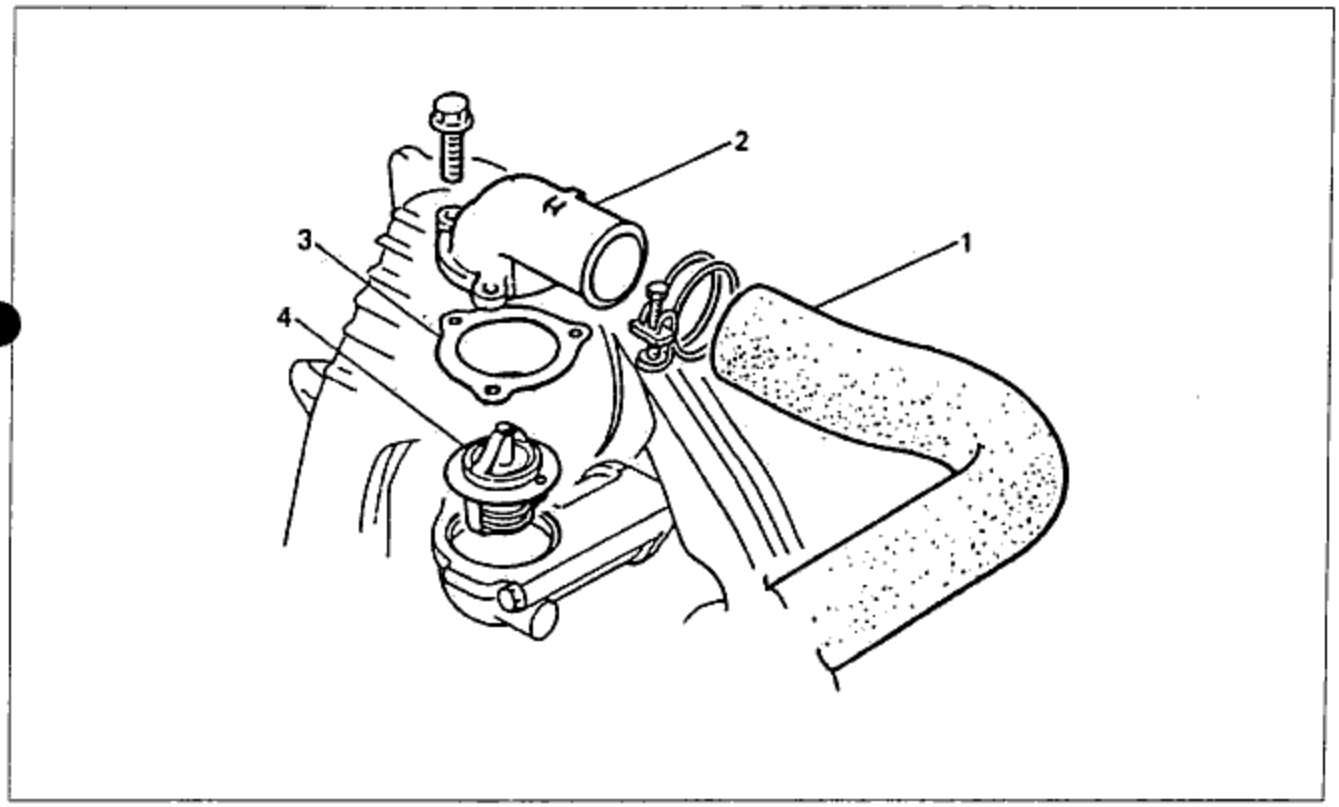

Fig. 3A-6

1. Radiator hose, upper
2. Thermostat cover
3. Gasket
4. Thermostat

◈ INSPECTION

Check the operation. Replace if necessary.

1. Visually check the valve to be sure it is air tight.
2. Place the thermostat and a thermometer in water, gradually increase the water temperature, and then check the initial opening temperature, the full-open temperature, and the full-open lift.

	Main	Sub
Opening temp.	88° ± 1.5℃	80° ± 1.5℃
Full-open temp.	100℃	100℃
Full-open lift.	8.0mm(0.31in) or more	1.5mm(0.06in) or more

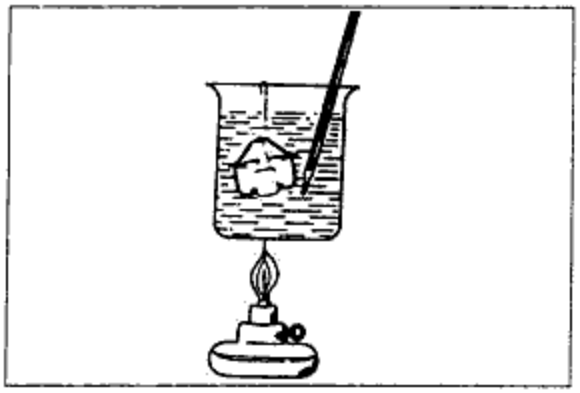

Fig. 3A-7

◇ RADIATOR

◈ REMOVAL AND INSTALLATION

After draining the coolant, remove the parts in the numbered order shown in the figure. Installation is the reverse order of removal.

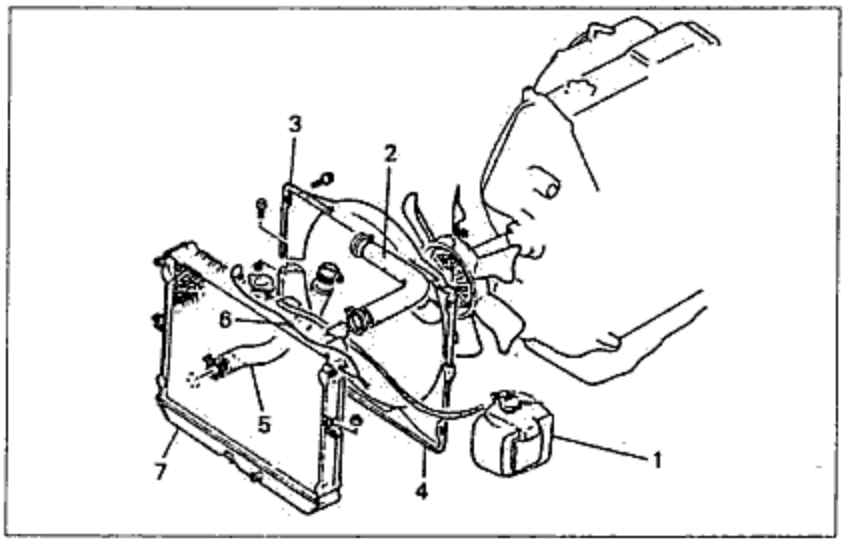

1. Coolant reservoir and hose
2. Rediator hose-upper
3. Cooling fan cover-upper
4. Cooling fan cover-lower
5. Radiator hose-lower
6. Coolant level sensor connector
7. Radiator

Fig. 3A-8

◈ INSPECTION

Check the following points. Repair or replace if necessary.

1. Cracks, damage, or water leakage.
2. Bent fins
   (Repair with a screwdriver.)
3. Distorted or bent radiator inlet

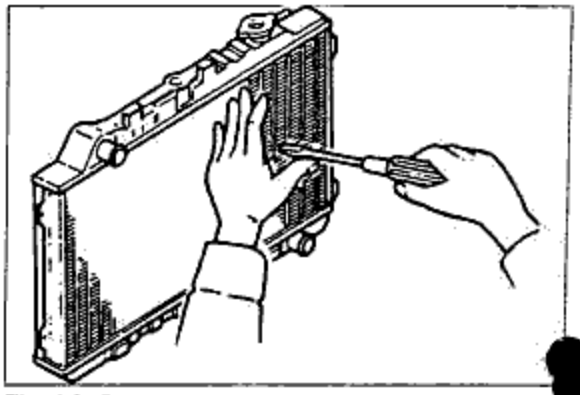

Fig. 3A-9

RADIATOR CAP

INSPECTION

Check the following points. Replace if necessary.

1. Pull the negative-pressure valve to open it. Check to be sure it closes completely when released.
   Check for damage on the contact surfaces.
2. Cracked or deformed seal packing.
3. Inspection of valve pressure
   ① Remove foreign material(water residue, etc.) from between radiator cap valve and valve seat.
   ② Attach the radiator cap to a tester. Apply pressure gradually, and then check to be sure that the pressure is uniform within the range of 0.75~1.05kg/cm² (11~15lb/in²)
   ③ Wait about 10 seconds, and then check whether the pressure has decreased.
   ④ The cap is normal if a pressure of 0.75~1.05kg/cm² (11~15lb/in²) can be maintained for about 10 seconds.

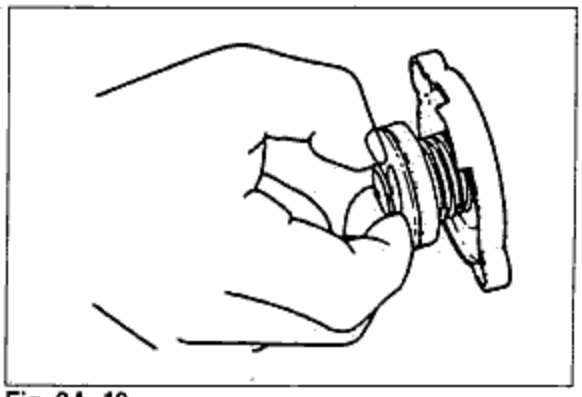

Fig. 3A-10

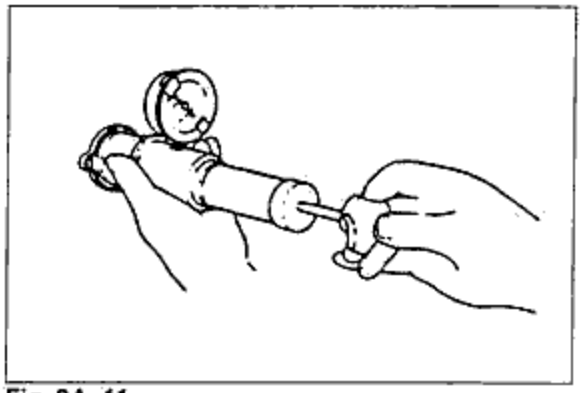

Fig. 3A-11

WATER PUMP

REMOVAL AND INSTALLATION

Turn the crankshaft so that the No.1 cylinder is at top dead center(timing mark).
After draining the coolant, remove the parts in the numbered order shown in the figure. Installation is the reverse order of removal.

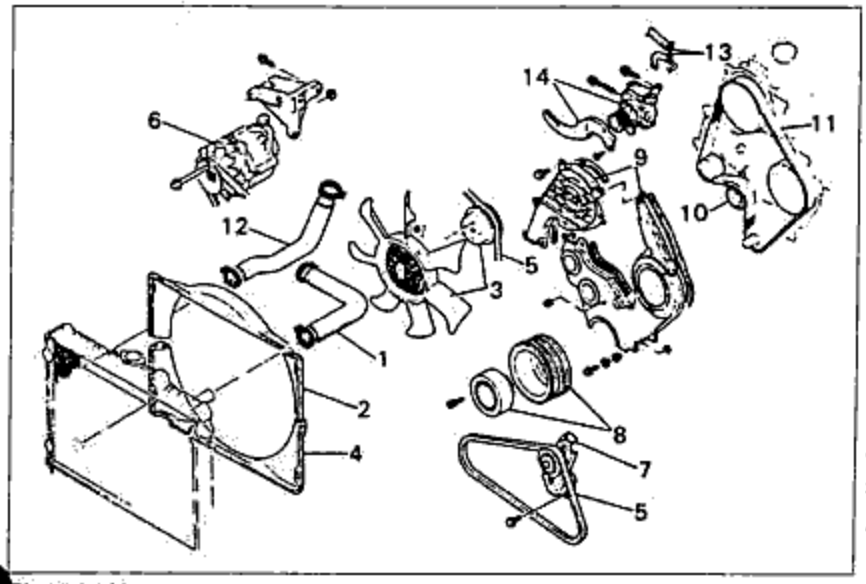

1. Radiator hose-upper
2. Cooling fan cover-upper
3. Cooling fan and pulley
4. Cooling fan cover-lower
5. Alternator and air conditioner drive belts
6. Alternator
7. Air conditioner drive belt tensioner
8. Crankshaft pulley
9. Timing belt cover-upper and lower
10. Timing belt tensioner and spring
11. Timing belt
12. Radiator hose-lower
13. Heater and coolant bypass hose
14. Water pump and alternator strap

Fig. 3A-12

◈ DISASSEMBLY AND ASSEMBLY

Disassemble in the numbered order shown in the figure. Assembly is the reverse order of disassembly.

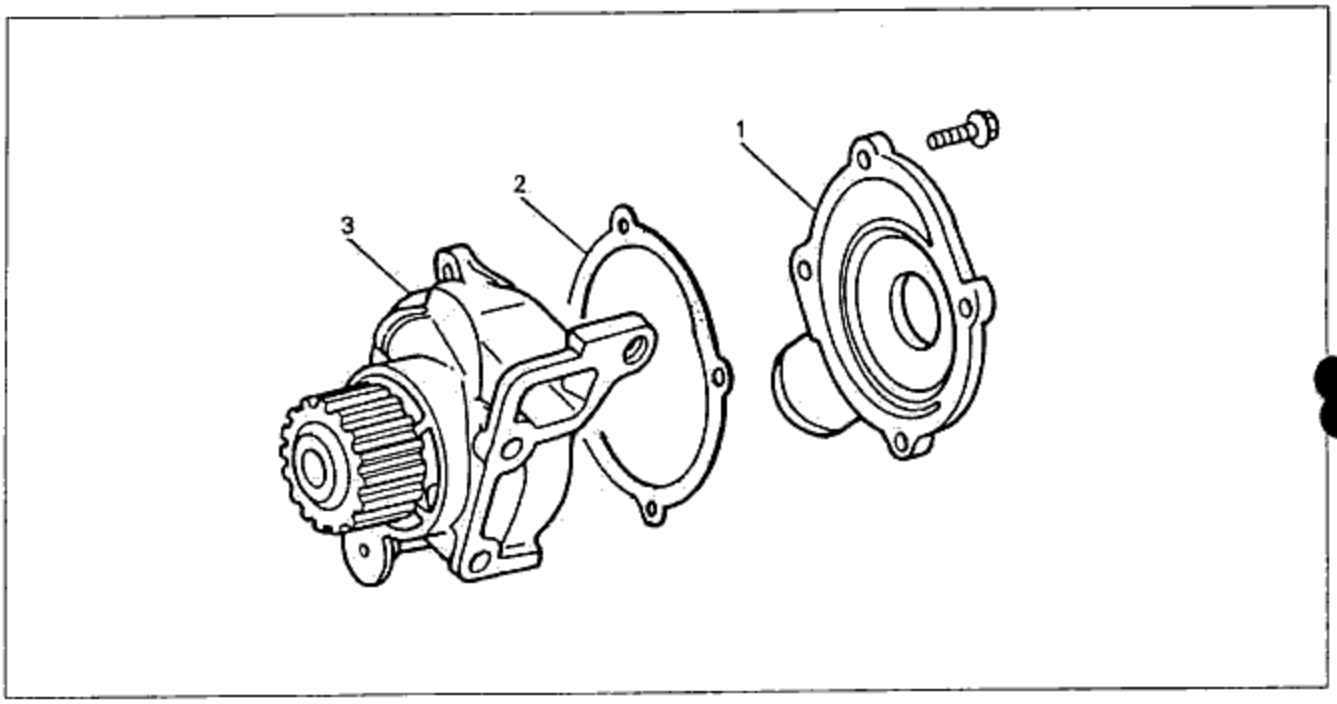

Fig. 3A-13

1. Water pump cover 2. Gasket 3. Water pump body

◈ COOLING FAN BEARING ASSEMBLY

DISASSEMBLY OF PULLEY BOSS

1. Remove the installing bolts from the pully boss.
2. Remove the pulley boss using the water pump boss puller(49 0636 145) and a suitable mandrel.

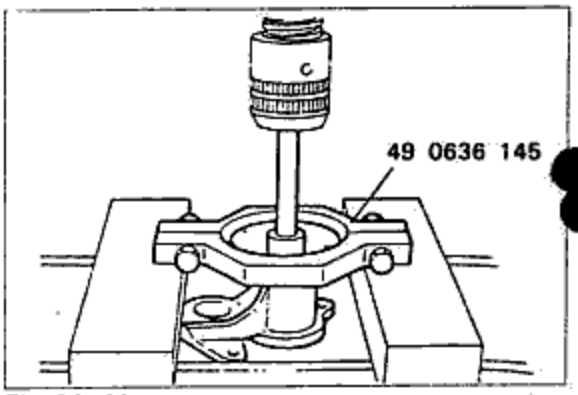

Fig. 3A-14

DISASSEMBLY OF BEARING

1. Remove the snap ring with a snap ring remover.
2. Remove the bearing by using a suitable pipe(outer diameter : 26mm, 1.0in) and a press.

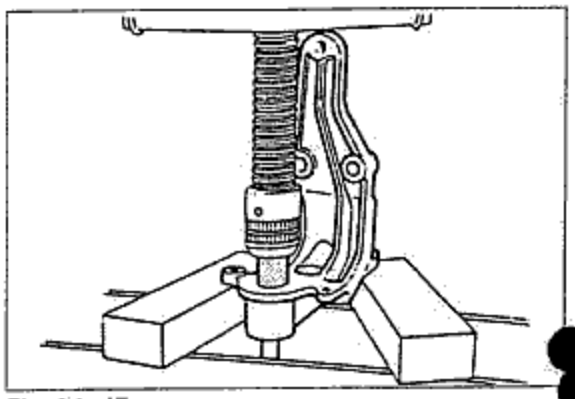

Fig. 3A-15

ASSEMBLY OF BEARING

1. Place the bracket as shown in the figure, and install the bearing so that it is horizontal to the bracket.
2. Use a suitable piece of pipe(external diameter 30mm, 1.0in) to press the bearing in.

Cautions;

- **If the oil pressure of the press sharply increases while pressing in, stop the work and determine the cause.**
- **Press the bearing in until it contacts the bracket end surface.**

3. Attach the snap ring.

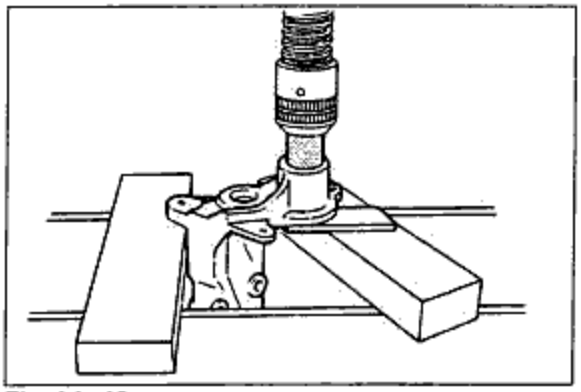

Fig. 3A-16

ASSEMBLY OF PULLY BOSS

1. Place the bracket, pulley boss, and the mandrel used during removal, as shown in the figure.
2. Press in the shaft into the pulley boss until the shaft protrudes 2.1mm(0.083in).

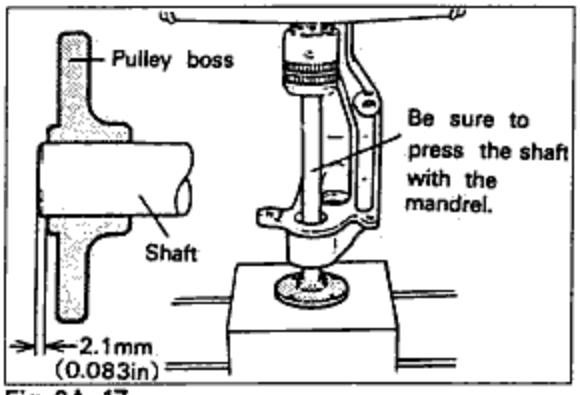

Fig. 3A-17

MEMO

COOLING SYSTEM

3B

- **OUTLINE** ..... **3B—2**
  - STRUCTURAL VIEW ..... 3B—2
  - FLOW CHART ..... 3B—3
- **SPECIFICATIONS** ..... **3B—3**
- **TROUBLESHOOTING GUIDE** ..... **3B—3**
- **COOLANT** ..... **3B—4**
- **THERMOSTAT** ..... **3B—4**
  - REMOVAL AND INSTALLATION ..... 3B—4
  - INSPECTION ..... 3B—4
- **RADIATOR** ..... **3B—5**
  - REMOVAL AND INSTALLATION ..... 3B—5
  - INSPECTION ..... 3B—5
- **RADIATOR CAP** ..... **3B—5**
  - INSPECTION ..... 3B—5
- **WATER THERMO-SWITCH** ..... **3B—6**
  - INSPECTION ..... 3B—6
- **WATER PUMP** ..... **3B—7**
  - REMOVAL AND INSTALLATION ..... 3B—7
  - DISASSEMBLY AND ASSEMBLY ..... 3B—7

OUTLINE

STRUCTURAL VIEW

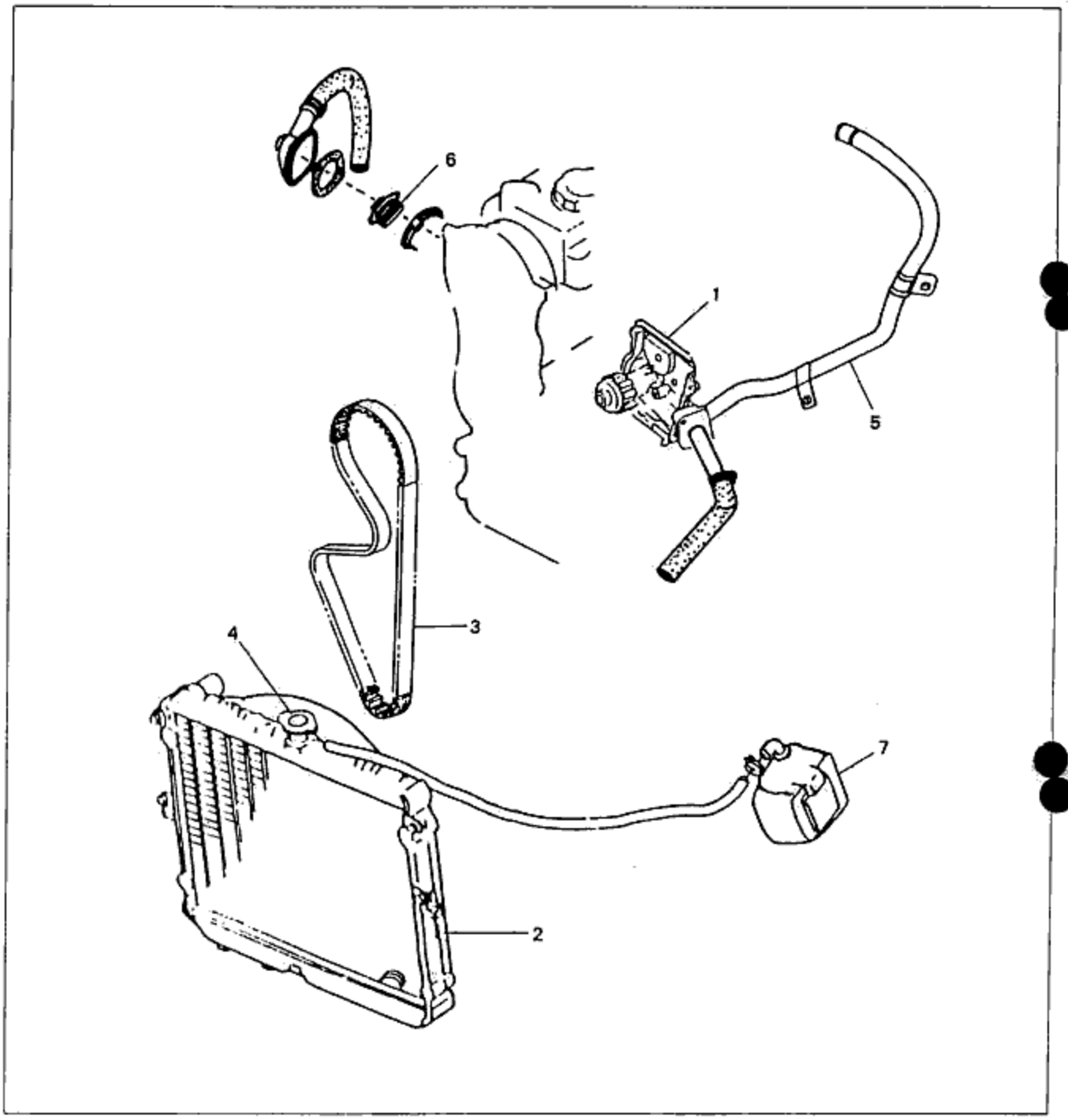

Fig. 3B-1

1. Water pump
2. Radiator
3. Timing belt
4. Radiator cap
5. Bypass pipe assembly
6. Thermostat
7. Coolant reservoir

FLOW CHART

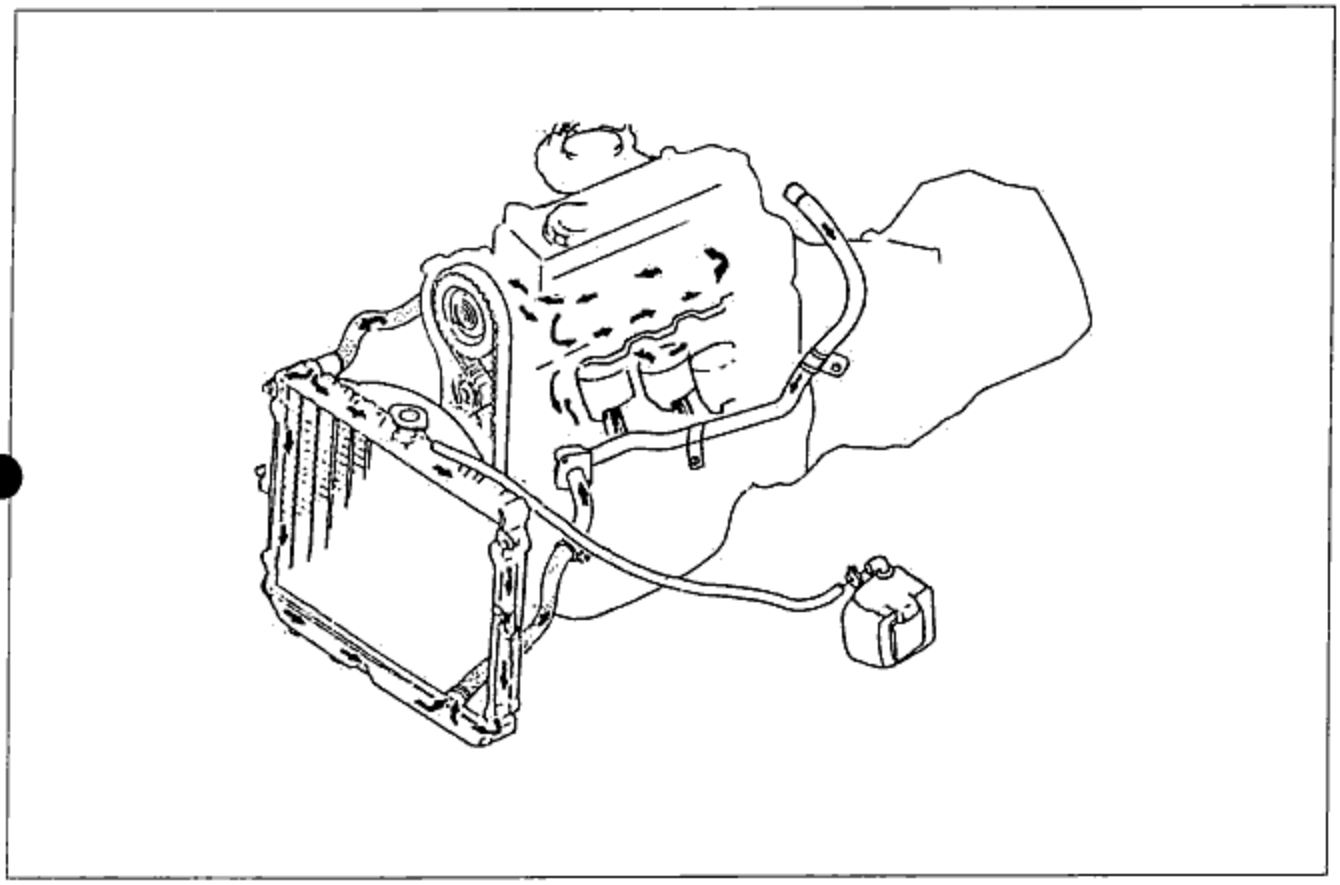

Fig. 3B-2

SPECIFICATIONS

Cooling method		Water-cooled
Coolant capacity		7.0 liters
Thermostat	Type	Wax type
	Opening temerature	82℃ (179.6°F)
	Full-open temperature	95℃ (203°F)
	Full-open lift	8.5mm (0.33in) or more
Water pump	Type	Centrifugal, timing belt driven
Radiator	Type	Corrugated
	Cap valve opening pressure	0.75~1.05kg/cm² (10.7~14.9lb/in²)
Cooling fan	Type	Electric
	Blades	4
	Outer diameter	300mm (11.8 in)

TROUBLESHOOTING GUIDE

Refer to section 3A

COOLANT

Refer to section 3A

THERMOSTAT

REMOVAL AND INSTALLATION

After draining out the coolant, remove the parts in the numbered order shown in the figure. Installation is the reverse order of removal.

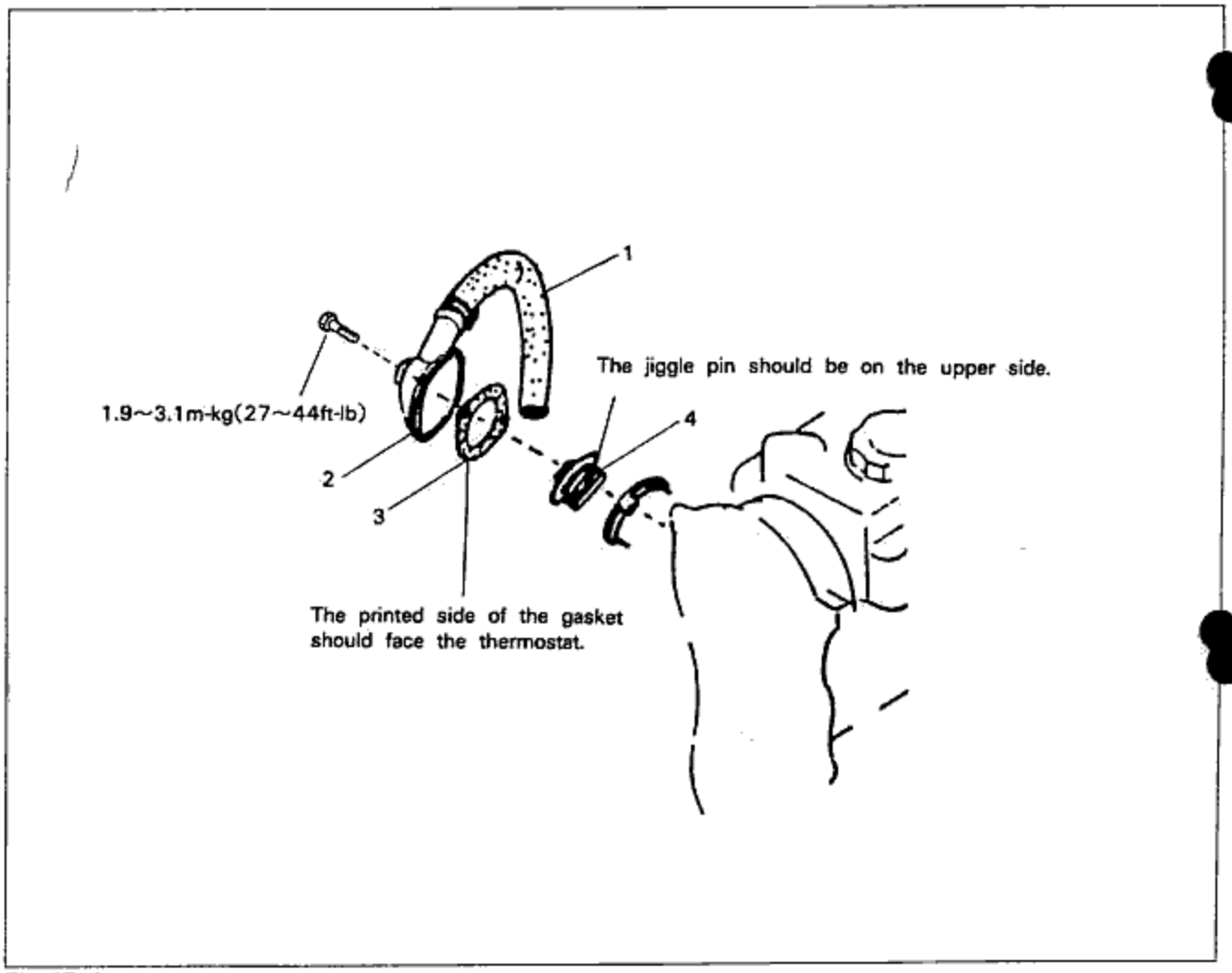

Fig. 3B-3

1. Water hose, upper
2. Coolant outlet
3. Gasket
4. Thermostat

INSPECTION

Refer to section 3A

RADIATOR

REMOVAL AND INSTALLATION

After draining the coolant, remove the parts in the numbered order shown in the figure. Installation is the reverse order of removal.

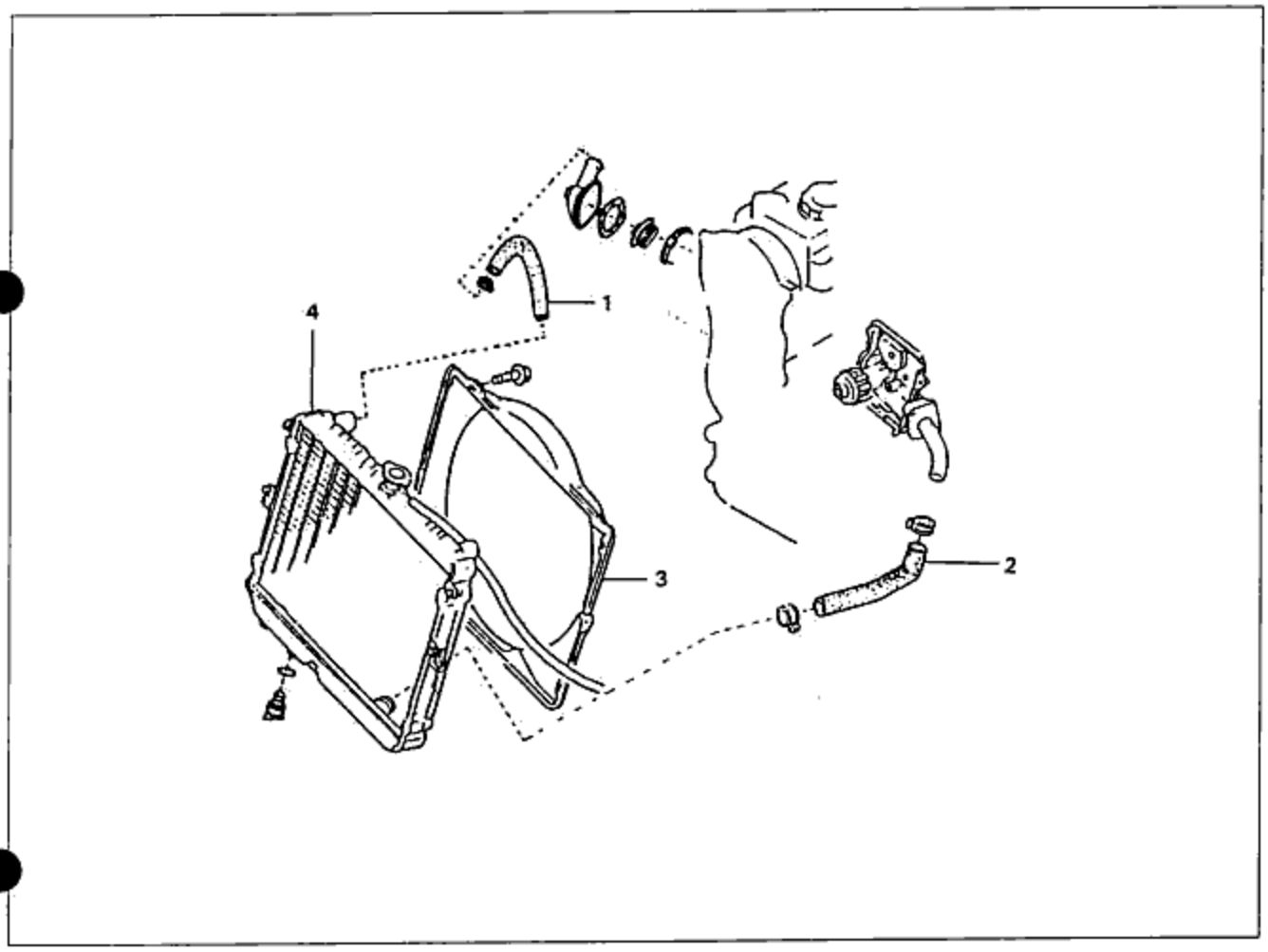

Fig. 3B-4

1. Water hose, upper
2. Water hose, lower
3. Fan motor and cowling assembly
4. Radiator

INSPECTION

Refer to section 3A

RADIATOR CAP

INSPECTION

Refer to section 3A

⊠ WATER THERMO-SWITCH

◈ INSPECTION

1. Remove the water thermo-switch from the radiator.

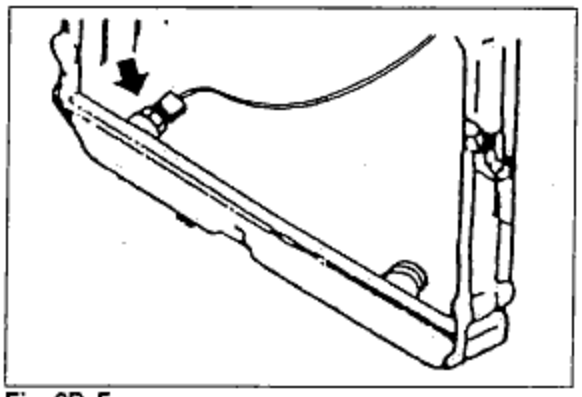

Fig. 3B-5

2. Place the water thermo-switch in a container of water.
3. Connect a circuit tester to the water thermo-switch.
4. Check to be sure that continuity is not indicated on the meter when the water temperature is 91±3℃ (195.8±5°F) or higher, and that continuity is indicated when the temperature is 84℃ (183.2°F) or less.
5. If the above conditions are not met, replace the switch.

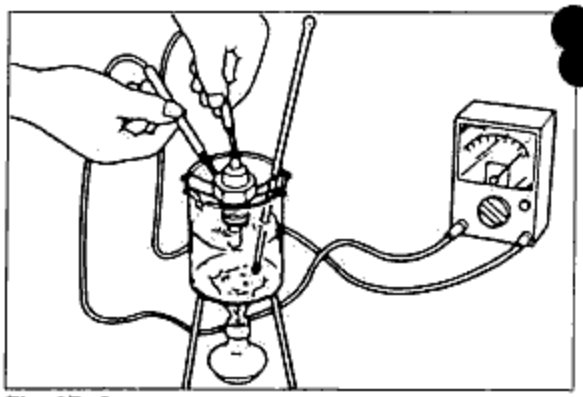

Fig. 3B-6

NOTE:

(a) Use an O-ring to seal the mounting of the water thermo-switch. Do not use seal tape on the threads of the thermo-switch.

(b) Check for water leakage after installation.

WATER PUMP

REMOVAL AND INSTALLATION

Turn the crankshaft so that the No.1 cylinder is at top dead center(timing mark.)
After draining the coolant, remove the parts in the numbered order shown in the figure. Installation is the reverse order of removal.

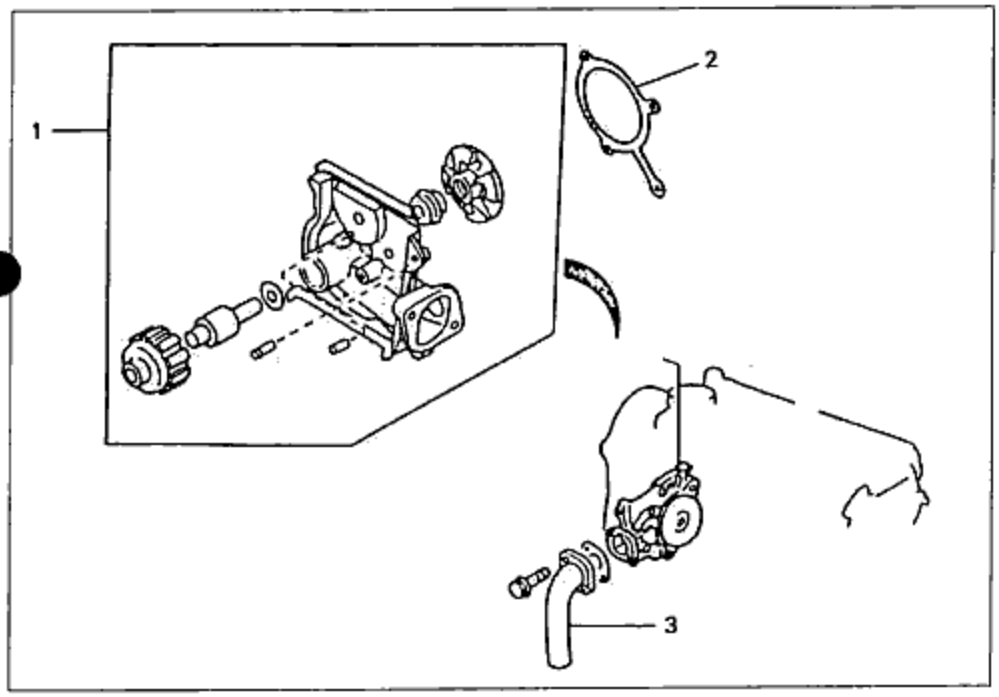

1. Water pump
2. Gasket
3. Inlet pipe

Fig. 3B-7

DISASSEMBLY AND ASSEMBLY

Disassemble in the numbered order shown in the figure. Assembly is the reverse order of disassembly.

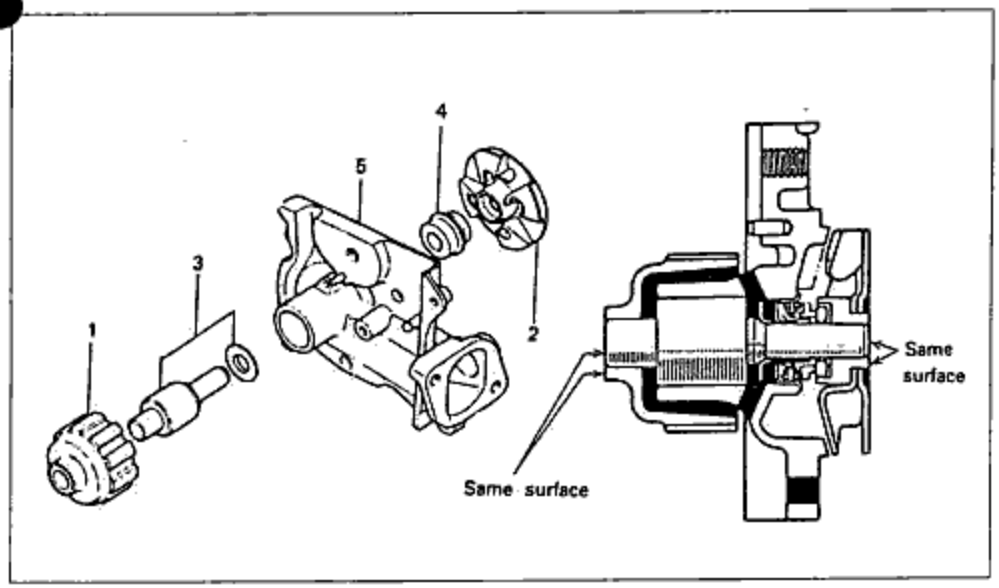

1. Pump pulley
2. Impeller
3. Shaft and bearing assembly
4. Water seal
5. Pump body

Fig. 3B-8

PULLEY BOSS

Remove the pulley boss by using the bearing puller (49 0839 425C)

Caution:

Replace the pulley boss with a new one if the timing belt groove is deformed.

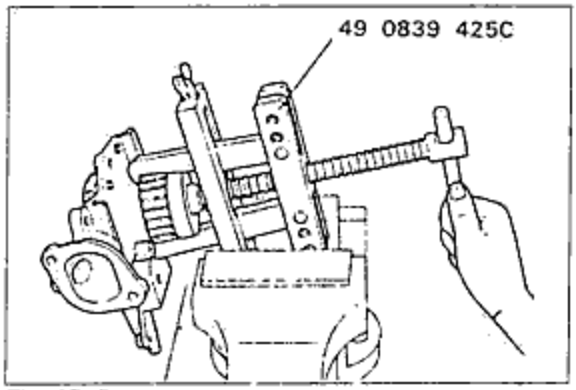

Fig. 3B-9

IMPELLER

Remove the impeller by using the support block(49 G030 146) and a press.
To press in the impeller, follow the step shown in the right figure, pressing it in until it is flushed with the shaft end.

Cautions:

- **Before pressing in the impeller, coat the water seal lip with coolant.**
- **Do not reinstall impeller if removed, replace with new impeller.**

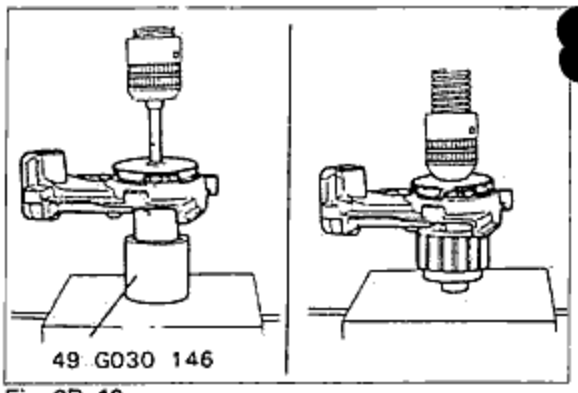

Fig. 3B-10

SHAFT AND BEARING

Use a press to remove or press in the shaft and bearing.

Cautions:

- **If the shaft and bearing are to be replaced, they must be replaced as an assembly.**
- **After pressing in the shaft and bearing, check to be sure rotation is smooth.**

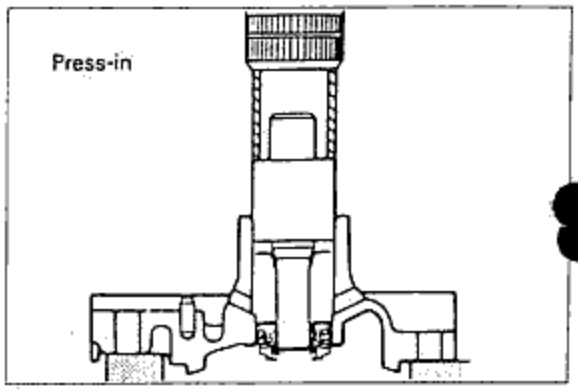

Fig. 3B-11

WATER SEAL

To remove and press in the water seal, gently tap it with a piece of pipe.

Cautions:

- **When pressing in the water seal, be careful that the seal is straight, and that the surface doesn't become damaged.**
- **After pressing in the water seal, press the seal lip with a finger to be sure it moves smoothly.**

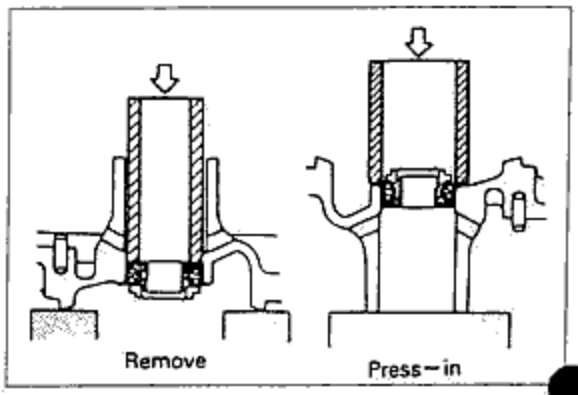

Fig. 3B-12

ASIA FUEL, INTAKE · EXHAUST SYSTEM 4A

OUTLINE ..... 4A—2
STRUCTURAL VIEW ..... 4A—2
SPECIFICATIONS ..... 4A—3
TROUBLESHOOTING GUIDE ..... 4A—4
FUEL LINE ..... 4A—5
FUEL FILTER ..... 4A—5
DESCRIPTION ..... 4A—5
REMOVING ..... 4A—5
DETECTOR ..... 4A—6
INSTALLING ..... 4A—6
WATER-DRAIN ..... 4A—6
AIR-BLEEDING ..... 4A—6
INJECTION PUMP ..... 4A—7
IMPORTANT SERVICE POINT ..... 4A—7
CONSTRUCTION OF INJECTION PUMP(VE-TYPE) ..... 4A—7
IDLING SPEED ..... 4A—8
INJECTION TIMING ..... 4A—8
CAM LIFT ..... 4A—10
REMOVING ..... 4A—10
INSTALLING ..... 4A—12
FUEL CUT VALVE ..... 4A—13
CHECKING ..... 4A—13
INJECTION NOZZLE ..... 4A—13
REMOVING ..... 4A—13
COMPONENTS ..... 4A—13
CHECKING ..... 4A—13
NOZZLE BODY AND NEEDLE VALVE ..... 4A—14
ASSEMBLING ..... 4A—15
INSTALLING ..... 4A—15
MANIPULATION OF COLD START DEVICE ..... 4A—15
CSD CABLE AND LINKAGE ..... 4A—15
INSPECTION AND ADJUSTMENT ..... 4A—15
ENGINE SPEED ..... 4A—16
INSPECTION AND ADJUSTMENT ..... 4A—16
PICK-UP SENSOR ..... 4A—16
AIR CLEANER ..... 4A—16
ACCELERATOR LINKAGE ..... 4A—16
AIR-BLEEDING ..... 4A—17
BLEEDING AIR FROM INJECTION PUMP ..... 4A—17

OUTLINE

STRUCTURAL VIEW

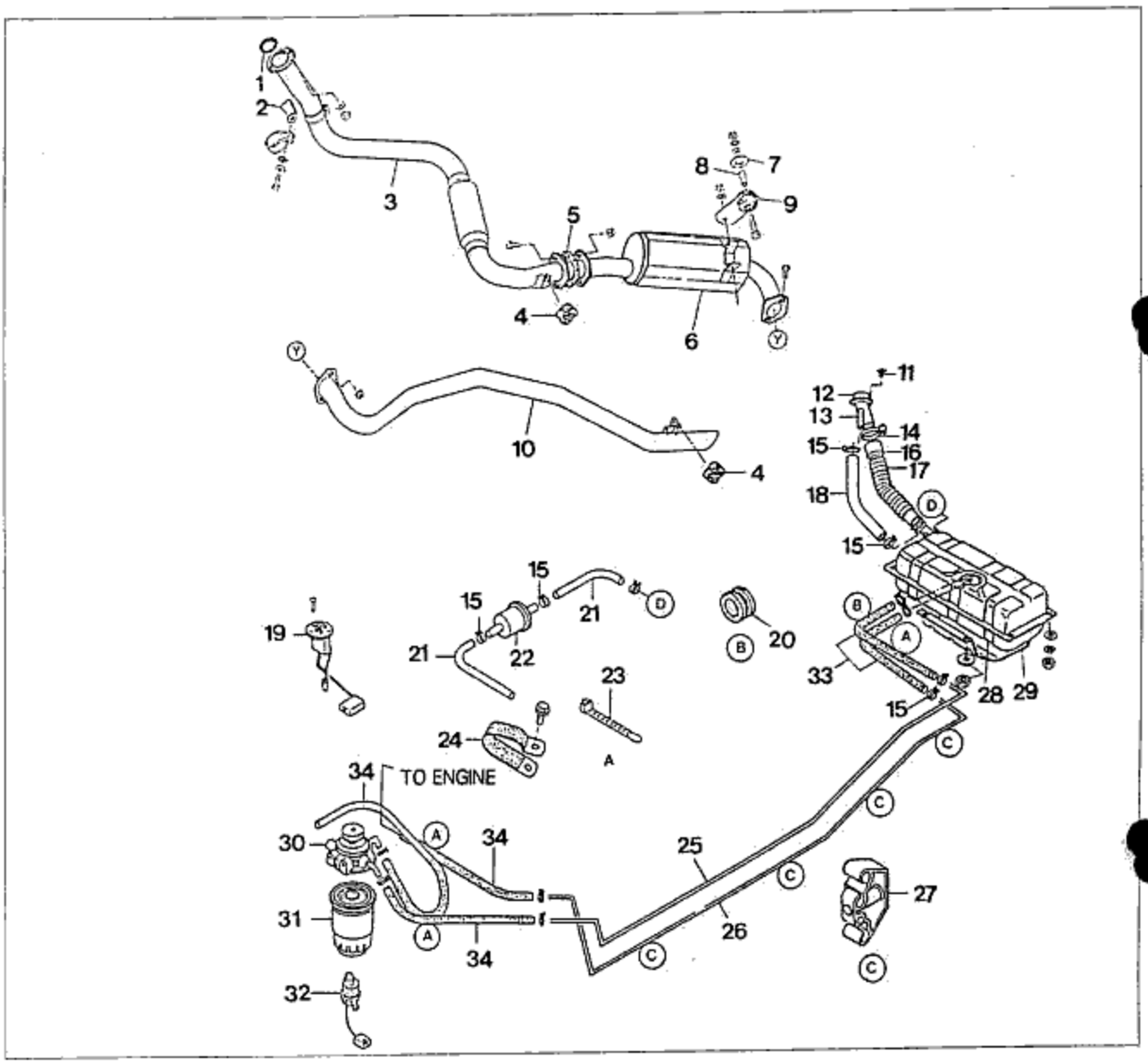

Fig. 4A-1

1. Exhaust pipe joint
2. Bracket
3. No.1 pipe Ass'y
4. Hanger lever
5. Gasket
6. Main silencer Ass'y
7. Washer
8. Collar
9. Hanger
10. Tail pipe Ass'y
11. Screw
12. Cap Ass'y
13. Filler pipe Ass'y
14. Clamp
15. Clip
16. Filler hose
17. Protector
18. Bent hose
19. Fuel tank gauge
20. Grommet
21. Hose
22. 2-way valve
23. Band
24. Clip
25. Feed pipe
26. Return pipe
27. Clip
28. Nut & plain washer
29. Skud plate washer
30. Adaper Ass'y
31. Catridge Ass'y
32. Sensor Ass'y
33. Fuel hose
34. Hose

⊠ SPECIFICATIONS

ITEM		SPECIFICATION
Fuel tank	Capacity	60liters(15.5U.S.Gallons)
	Position	Right side
Injection pump	Type	VE type
	Injection timing	ATDC 4°
	Turning direction	Clock-wise
	Idling speed	750-800rpm
	Driving type	Timing belt
Injection nozzle	Nozzle type	Throttle type
	Orifice Dia. × No.	10mm(0.039in) × 1
	Injection pressure	135kg/cm²
Air cleaner		Filter paper element type
Fuel filter		Cartridge type with water-detector
Fast idling speed	Setting speed	875 – 925rpm (When the air-con, switch is opened and the vacuum line is connected)

⊠ TROUBLESHOOTING GUIDE

Problem	Possible Cause	Correction
Hard starting	Clogged fuel filter	Replace
	Air in fuel filter	Air-bleed
	Faulty fuel cut valve	Replace
	Faulty injection timing	Adjust
	Air in injection pump	Air-bleed
	Trouble inside of injection pump	Replace
	Seized needle valve of injection nozzle	Clean or replace
	Fuel dripping from injection nozzle	Replace
	Faulty injection starting nozzle	Adjust
Rough idling	Clogged fuel filter	Replace
	Air in fuel filter	Air-bleed
	Faulty fuel cut valve	Replace
	Faulty injection timing	Adjust
	Air in injection pump	Air-bleed
	Trouble inside of injection pump	Replace
	Seized needle valve of injection nozzle	Clean or replace
	Faulty injection starting pressure	Adjust
	Improper mounting to nozzle holder	Disassemble and Assemble or replace
	Leakage of gasket	Replace
	Crack of injection pipe	Replace
	Leaking from injection pipe joint	Retighten or replace
	Improper idling speed	Adjust
Engine knocking	Faulty injection timing	Adjust
	Low quality of fuel	Replace
	Faulty injection starting pressure	Adjust
	Seized needle valve of injection nozzle	Clean or replace
	Fuel dripping from injection nozzle	Replace
High fuel Consumption	Faulty injection timing	Adjust
	High idling speed	Adjust
	Faulty injection starting pressure	Adjust
	Fuel dripping from injection nozzle	Replace
	Leakage of gasket	Replace
	Leaking from injection pipe joint	Retighten or replace
	Clogged fuel filter	Replace
	Clogged air cleaner	Clean or replace
Poor acceleration	clogged air cleaner	Clean or replace
	Seized needle valve of injection nozzle	Clean or replace
	Fuel dripping from injection nozzle	Replace
	Faulty fuel cut valve	Replace
	Faulty injection timing	Adjust
	Air in injection pump	Air-bleed
	Trouble inside of pump	Replace
	Crack of injection pipe	Replace
	Leaking from injection pipe joint	Retighten or replace
	Air in fuel liter	Air-bleed
	Clogged fuel filter	Replace
Excessive exhaust smoke	Clogged air cleaner	Clean or replace
	Improper injection timing	Adjust
	Faulty injection nozzle	Adjust or replace

FUEL LINE

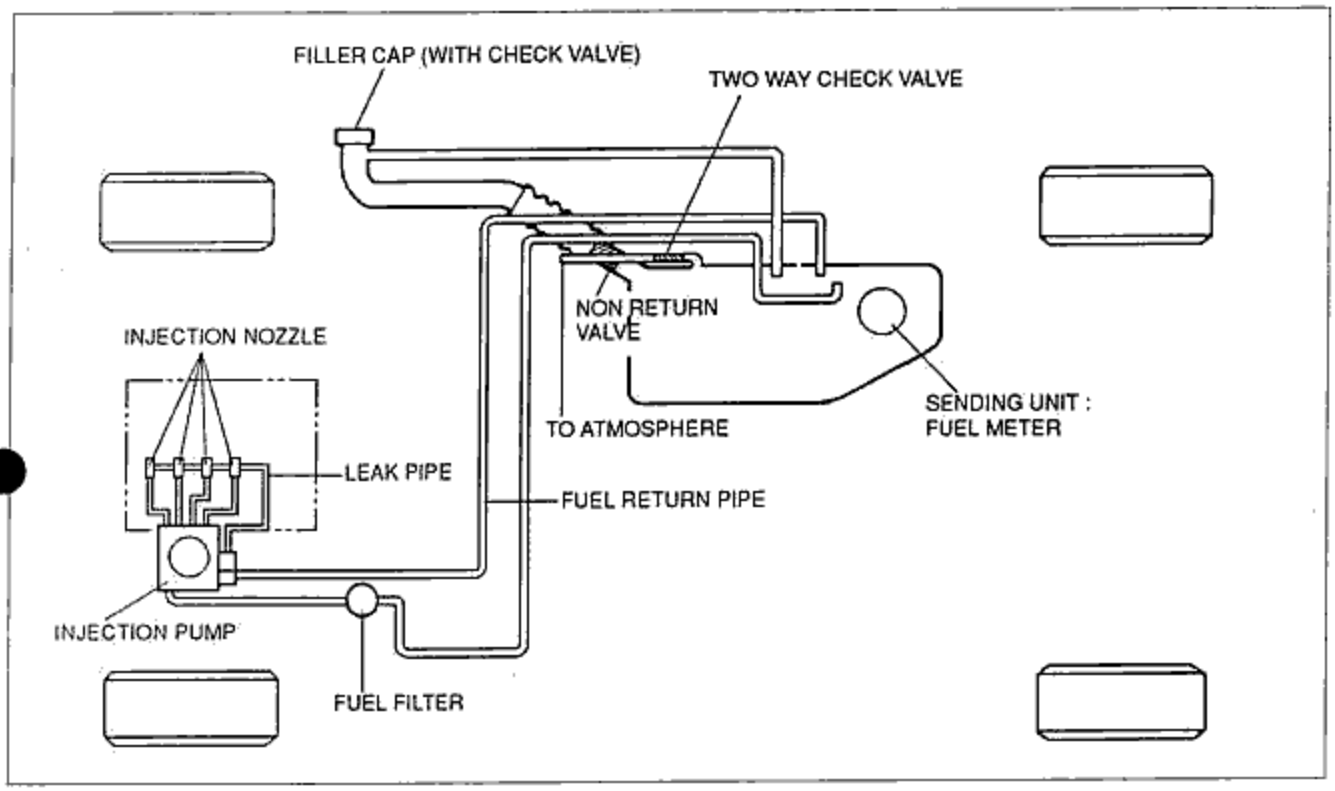

Fig. 4A-2

FUEL FILTER

DESCRIPTION

The fuel filter, installed between fuel tank and injection pump. Plays important roles of filtering foreign material and seperating water in fuel system.

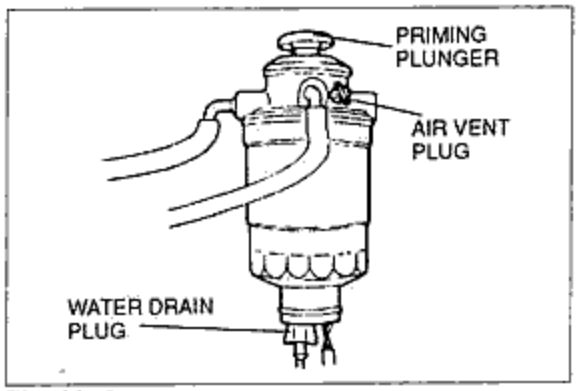

Fig. 4A-3

REMOVING

1. Disconnect the wiring coupler.
2. Remove the fuel filter with a suitable wrench.

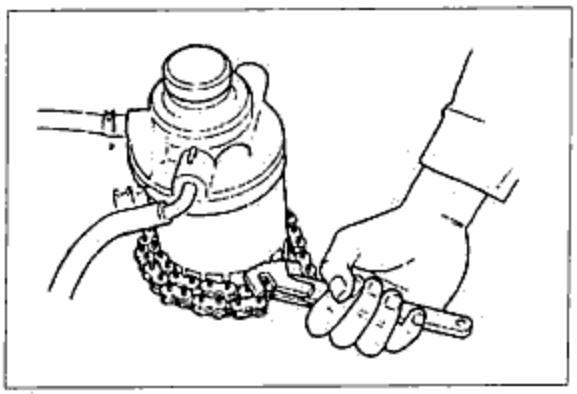

Fig. 4A-4

◆ DETECTOR

Checking

1. Remove the detector from the fuel filter.
2. Check the continuity of the lead wires(Attach circuit tester to lead wires).
3. The detector is normal when continuity exists in the down position and no continuity exists in the up position.

Caution

Bleed air after installation of detector

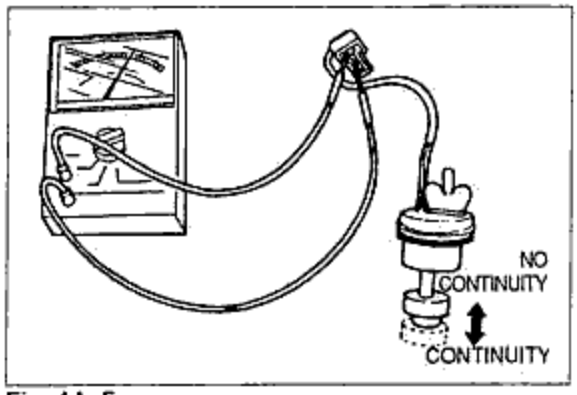

Fig. 4A-5

◆ INSTALLING

1. Apply fuel onto the "O" ring.
2. Install the fuel filter and tighten it fully, by hand.
3. Make sure to connect the wiring coupler and fuel hoses in the correct position after installation.

Caution

- **After installing the filter, bleed air from the fuel filter.**
- **Also confirm that there are no fuel leaks by starting the engine.**

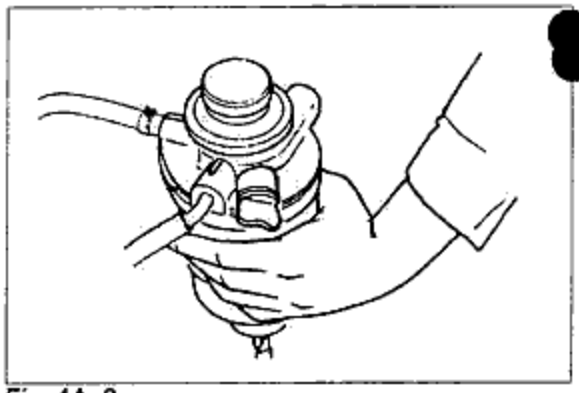
Fig. 4A-6

◆ WATER-DRAIN

1. Loosen the water drain plug and drain water until the pure fuel comes out.
2. Close the water drain plug.
3. Do air-bleeding.

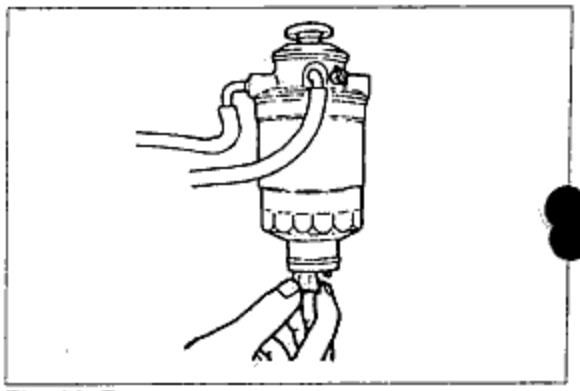
Fig. 4A-7

◆ AIR-BLEEDING

1. Loosen the air vent plug.
2. Pump the fuel priming plunger in an up-and-down motion about 7 times until the pure fuel comes out.
3. Securely tighten the air vent plug.

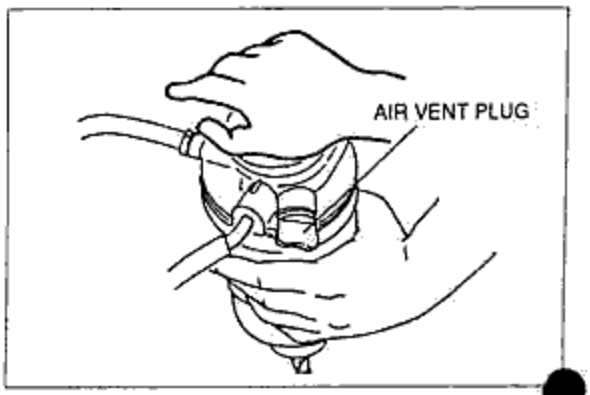

Fig. 4A-8

INJECTION PUMP

IMPORTANT SERVICE POINT

If the inside of the injection pump is disassembled for maintenance, be sure to properly use the checking device such as the injection pump tester, and carefully inspect each component.

CONSTRUCTION OF INJECTION PUMP (VE-TYPE)

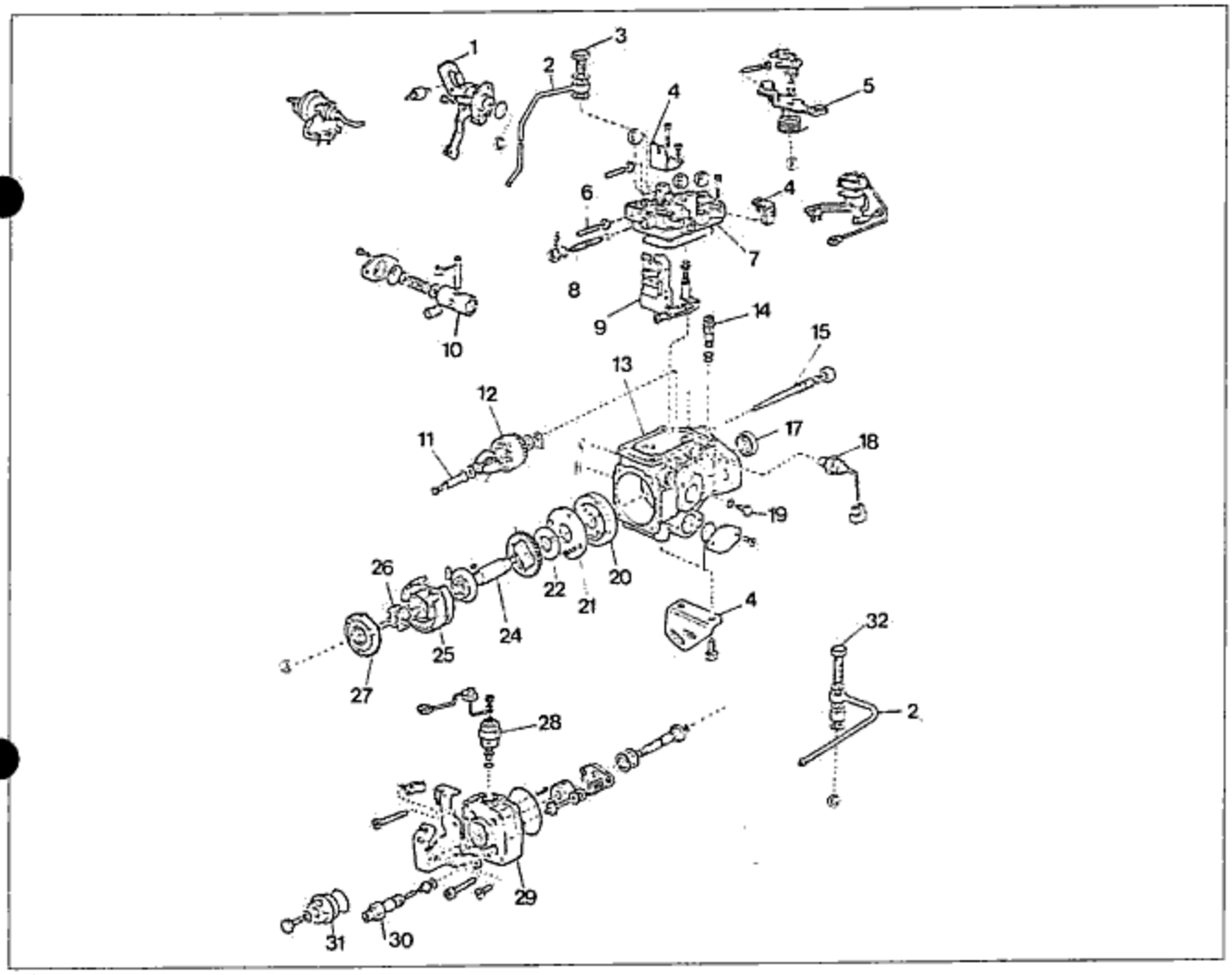

Fig. 4A-9

1. Cover
2. Eye
3. Over flow valve
4. Bracket
5. Lever
6. Screw
7. Governor cover
8. Rod screw
9. Governor lever
10. Piston
11. Governor sleeve
12. Fly weight holder
13. Housing
14. Regulating valve
15. Governor shaft
16. Fly weight
17. Oil seal
18. Pick-up
19. Pivot bolt
20. Feed pump
21. Cover
22. Washer
23. Gear
24. Drive shaft
25. Roller
26. Disc
27. Cap disc
28. Magnet valve
29. Injection pump
30. Delivery valve holder
31. Plug
32. Eye bolt

◆ IDLING SPEED

Checking

1. Warm up the engine to normal operating temperature.
2. Attach a tachometer and check the range speed.

Idling speed: 750~800rpm

If the idling speed is not within the specified range, adjust the idling speed.

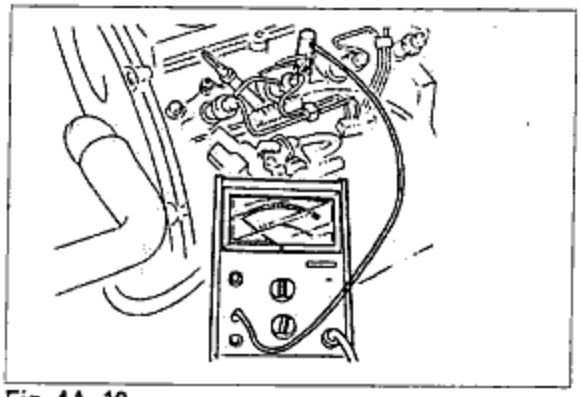

Fig. 4A-10

Adjusting

1. Confirm the accelerator cable deflection.
   If the deflection is not within the standard range, adjust it by turning accelerator cable lock nuts.

   Standard deflection: 1.0~3.0mm(0.04~0.12in)

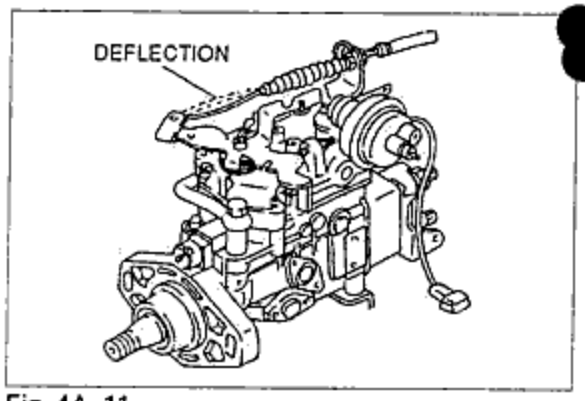

Fig. 4A-11

2. Loosen the lock nut of the idle adjusting bolt and adjust the idling speed by turning the idle adjusting bolt.

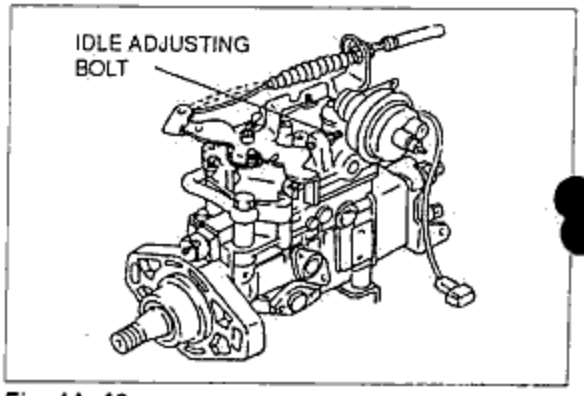

Fig. 4A-12

NOTE

Idle speed will increase when the adjusting bolt is turned clockwise and decrease when turned counter-clockwise.

◆ INJECTION TIMING

Checking

1. Align the timing mark (4° ATDC) on the crankshaft pulley with the indicator pin by turning the crankshaft.
2. Disconnect the injection pipes from the injection pump.

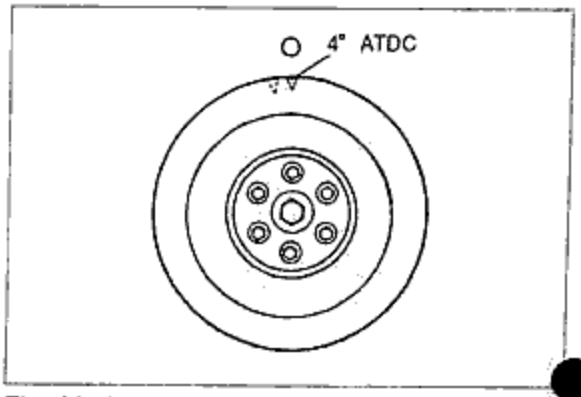

Fig. 4A-13

3. Remove the hydraulic head plug on the injection pump.
4. Mount the measuring device into the plug hole on the hydraulic head so the tip of the dial gauge pointer touches the plunge end of the pump and dial gauge indicates approx. 2.0mm(0.08in)

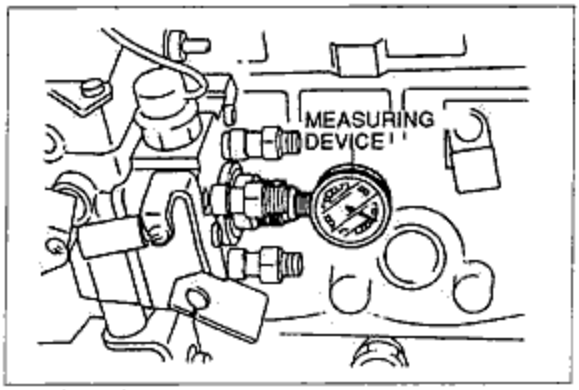

Fig. 4A-14

5. Turn the crankshaft pulley slowly counter-clockwise (in reverse direction of engine rotation) until the timing mark on the crankshaft pulley moves from the original position(4° ATDC) to the counterclockwise side by 30~50° and make sure the dial indicator pointer stops.
   Set the dial gauge pointer on Zero(0).

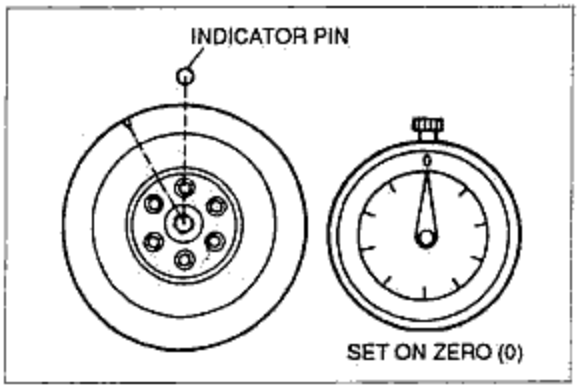

Fig. 4A-15

NOTE

When setting the dial indicator, confirm that the dial indicator pointer does not deviate from the scale mark of "0" by slightly turning the crankshaft to the right and left.

6. Turn the crankshaft pulley clockwise(in direction of engine rotation) to align the timing mark with the indicator pin. If the dial guage pointer indicates 1±0.2mm(0.04±0.008in) when the timing mark is aligned with the indicator pin, the injection timing is correctly adjusted. If necessary, adjust the injection timing.

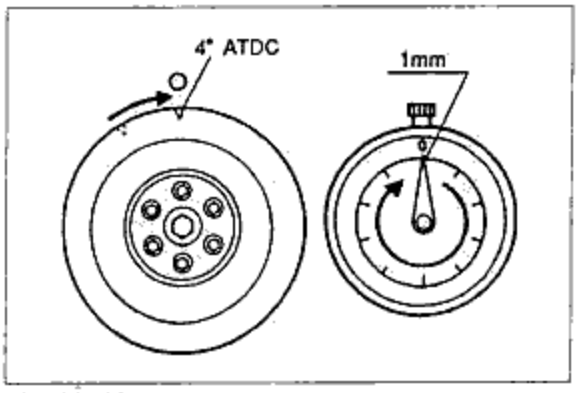

Fig. 4A-16

Adjusting

1. Perform the checking procedure.
2. Loosen the injection pump attaching nuts and bolts.

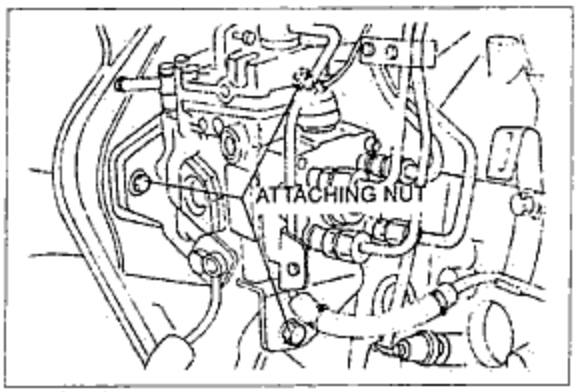

Fig. 4A-17

3. Adjust the injection timing by moving the injection pump until the cam lift becomes 1±0.02mm(0.04±0.0008in).

Cam lift	Injection timing	Adjustment
When it is more than 1±0.02mm	Advanced	Turn the injection pump clockwise(in direction of engine rotation
When it is less than 1±0.02mm	Retarded	Turn the injection pump counter-clockwise (in reverse direction of engine rotation)

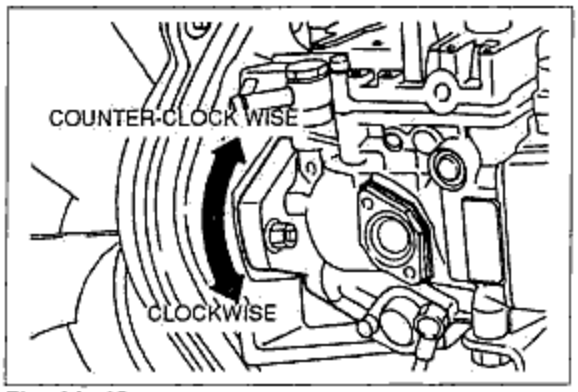

Fig. 4A-18

◆ CAM LIFT

Checking

1. Perform the injection timing checking procedure(1~5)
2. Turn the crankshaft clockwise(in direction of engine rotation) and read the maximum value which the dial indicator pointer indicates.
   Cam lift:2.2mm(0.08in)
3. If the cam lift is less than the specified value, there is a problem with the cam disc or roller Ass'y.

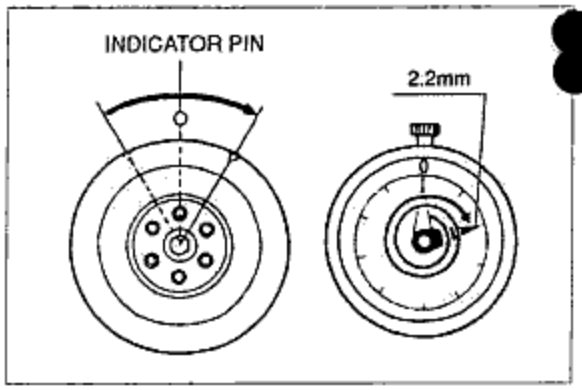

Fig. 4A-19

◆ REMOVING

1. Remove the following parts.
   (1) Battery negative cable
   (2) Accelerator control cable

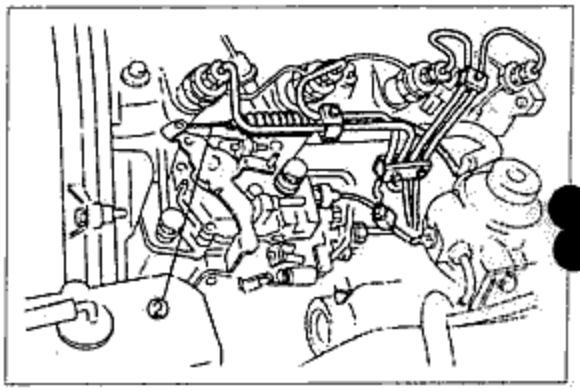
Fig. 4A-20

2. Remove the service hole cap of the injection pump pulley.
3. Align the arrow mark on the timing belt cover with the matching mark on the injection pump pulley.

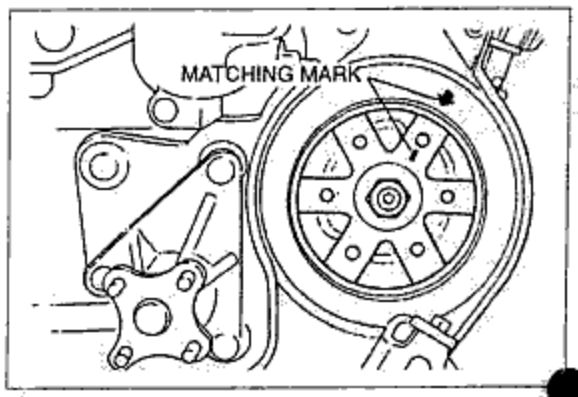

Fig. 4A-21

4. Affix the injection pump pulley with two bolts(35~40mm).
5. Remove the pulley lock nut and spring washer.

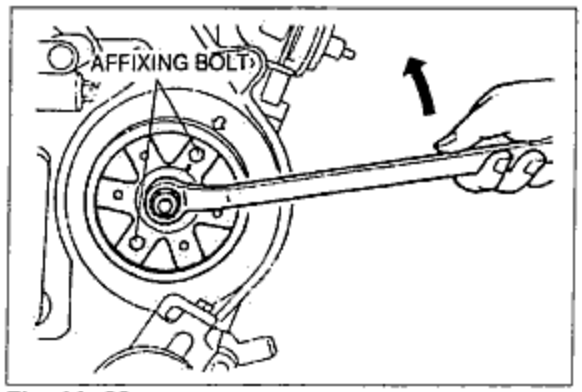

Fig. 4A-22

6. Apply the matching marks on the injection pump flange and bracket for reinstallation.

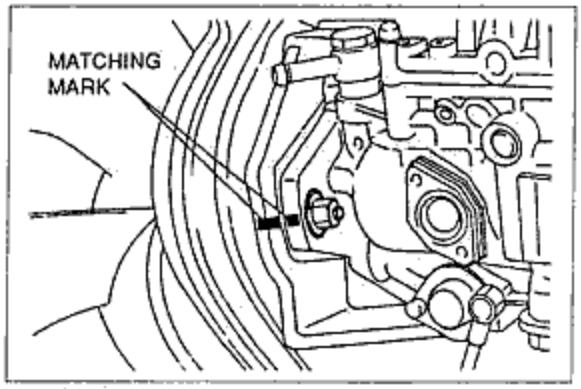

Fig. 4A-23

7. Remove the injection pump attaching nuts and loosen the attaching bolts more than three revolutions.

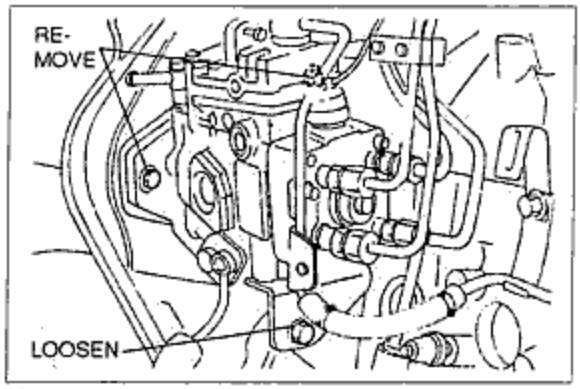

Fig. 4A-24

8. After disconnecting the injection pump and pulley by using the pulley puller, remove the injection pump.

Cautions
- Do not remove the two affixing bolts until the injection pump is installed.
- Be careful not to drop the semi circular(woodruff) key.

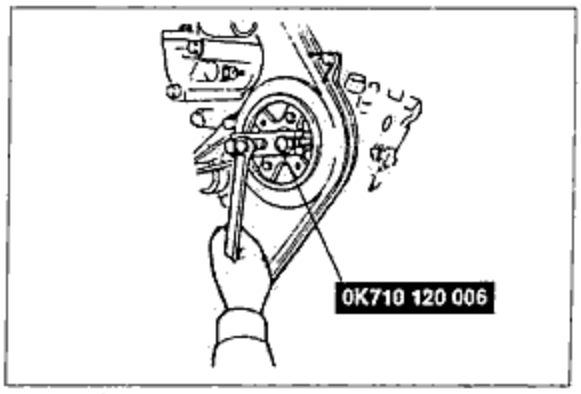

Fig. 4A-25

◈ INSTALLING

1. Install the semi circular(woodruff) key on the injection pump shaft groove.

NOTE

Before installing the key on the pump shaft, lightly tap the key groove with hammer to assure the key installation.

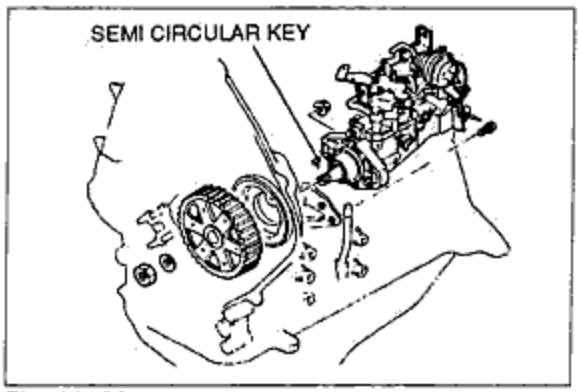

Fig. 4A-26

2. Install the injection pump and align the matching marks on the injection pump, flange and bracket. Then tighten the two attaching bolts and two nuts.
   Tightening torque:
   Two nuts:
   15.6~22.5N·m(1.6~2.3kg·m, 11.5-16.6ft·lb)
   Two bolts:
   31.3~46.1N·m(3.2~4.7kg·m, 23.0~33.8ft·lb)

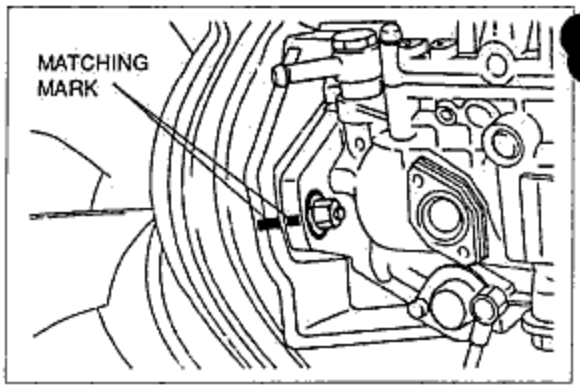

Fig. 4A-27

3. Install the spring washer and lock nut and tighten it.
   Tightening torque:
   68.6~78.4N·m(7~8kg·m, 50.6~57.9ft·lb)

4. Remove the affixing bolts.
5. Install the service hole cap of the injection pump pulley.

Caution

After the installation, check the injection timing. If the injection timing is incorrect, adjust it.

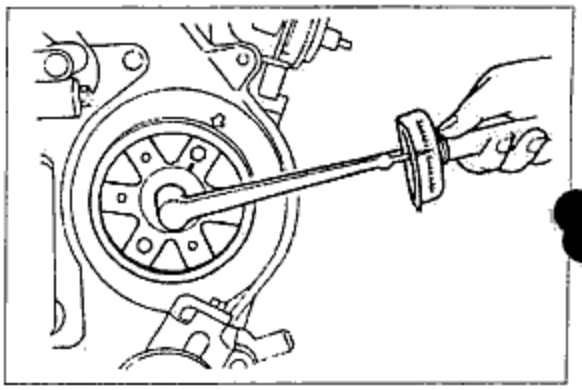

Fig. 4A-28

6. Install the following parts.
   (1) Injection pipes
   (2) Accelerator control cable
   (3) Battery negative cable

Caution

Bleed air from the injection pump.

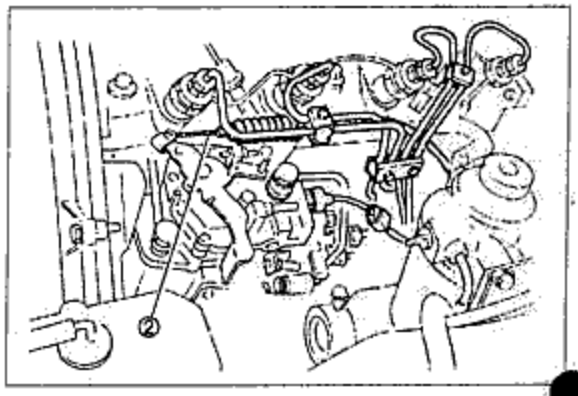

Fig. 4A-29

FUEL CUT VALVE

CHECKING

The fuel cut valve is in a normal condition when the engine runs smoothly and is stopped by disconnecting the coupler.
Check the above function. If the engine does not stop by disconnecting the coupler, the fuel cut valve is faulty.
When the fuel cut valve is faulty, replace the complete set shown in figure.

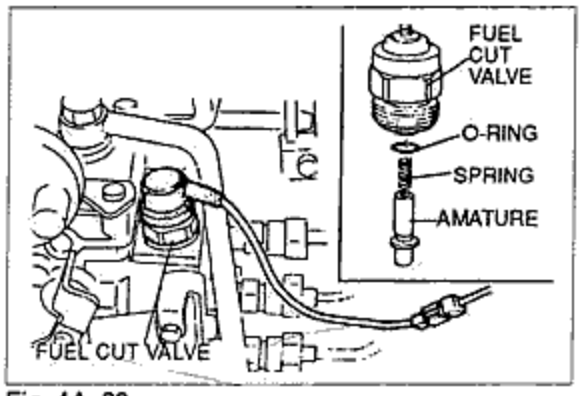

Fig. 4A-30

INJECTION NOZZLE

REMOVING

Remove in the following order.
1. Injection pipes
2. Leak pipe lock nut
3. Leak pipe
4. Washer
5. Injection nozzle
6. Gasket
7. Corrugate gasket

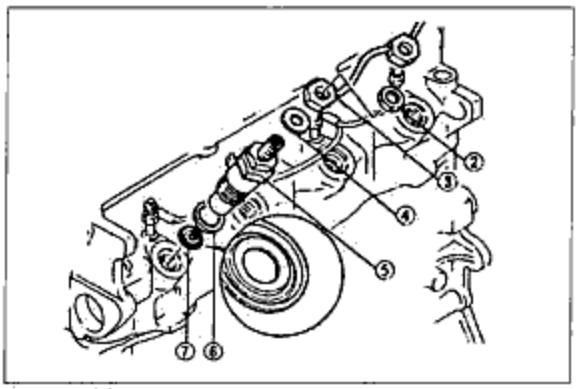
Fig. 4A-31

COMPONENTS

The injection nozzle consists of the following parts.
1. Retaining ring
2. Nozzle body and needle valve
3. Distance piece
4. Pressure pin
5. Pressure spring
6. Shim
7. Nozzle holder
8. Washer
9. Nut

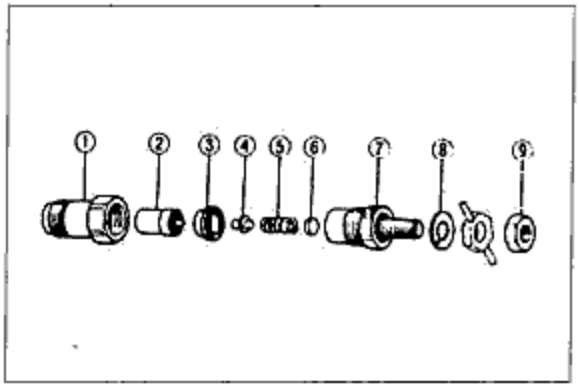
Fig. 4A-32

CHECKING

Check the nozzles using diesel fuel at approximate temperature of 20℃(68°F)

Injection starting pressure

1. Set the nozzle on the nozzle tester.
2. Bleed the air by pumping the nozzle tester handle several times.
3. Slowly lower the nozzle tester handle and check the value shown on the pressure gauge when injection is started.
   Injection start pressure: 135kg/㎠(1919.7lb/in²)

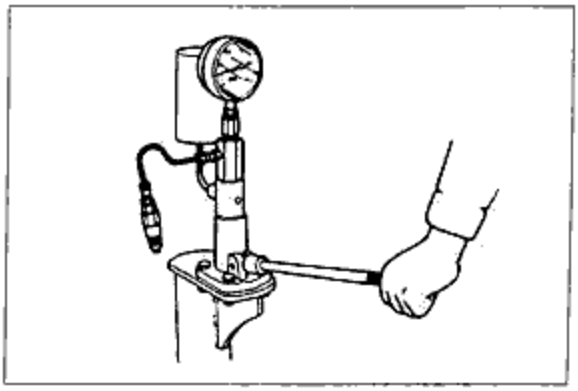
Fig. 4A-33

If the injection start pressure is not within the specified range, adjust it.
Adjust the starting pressure with the shim. The shim has 27 different thicknesses for every 0.04mm(0.0016in) from 0.50mm(0.0197in) to 1.54mm(0.0606in).
As 0.04mm(0.0016in) is added, approx. 4.8kg/cm²(16.16lb/in²) of injection pressure increases.

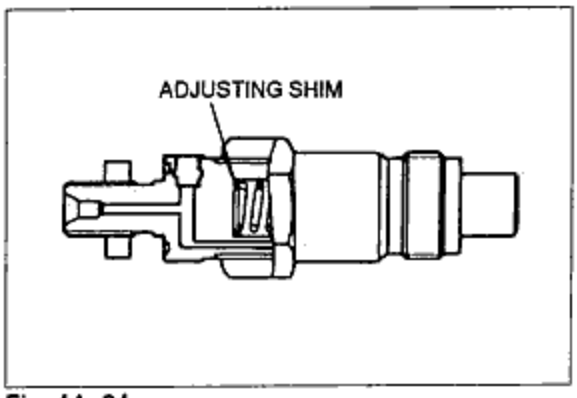

Fig. 4A-34

Tightness of valve seat

Apply a pressure of 115kg/cm²(1635.3lb/in²), and check for fuel leaks from the nozzle injection hole. If fuel leaks, it is necessary to disassemble, wash and recheck the injection nozzle or replace it.

Atomizing condition(Spray pattern)

1. Set the injection nozzle on the nozzle tester.
2. Bleed the air by operating the nozzle tester handle several times.
3. Keeping the pressure gauge of the nozzle tester in the nonfunctioning condition, quickly lower the handle several times(lower the handle as quickly as possible so that a pulsation whistling sound can be heard) and check the atomizing condition.
   (1) Fuel is atomized uniformly and properly.
   (2) The injection angle and direction are normal. If the atomizing condition is incorrect, it is necessary to disassemble, wash and recheck the injection nozzle, or to replace it.

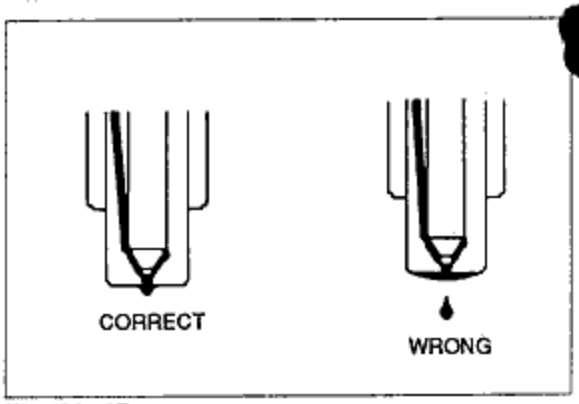

Fig. 4A-35

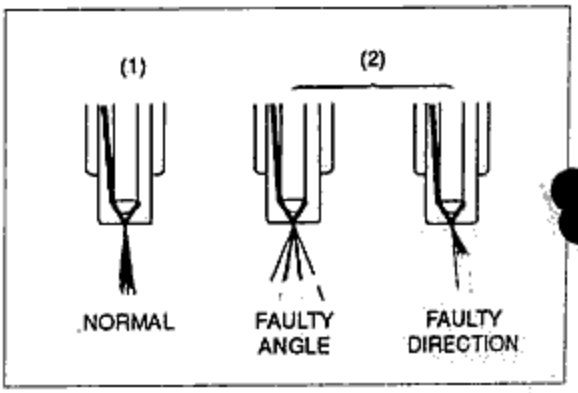

Fig. 4A-36

◆NOZZLE BODY AND NEEDLE VALVE

Checking

1. Check and ensure that the valve seat of the needle valve and other parts are not damaged.
2. Make sure that the nozzle body is not damaged. Hold the nozzle body upright and insert approximately two thirds of the needle valve and see if the needle valve drops to the valve seat by its own weight.

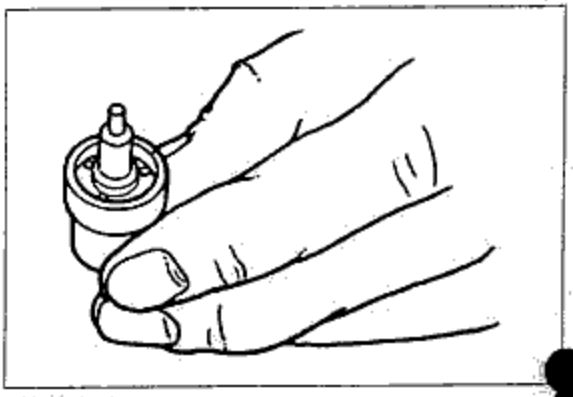
Fig. 4A-37

◆ ASSEMBLING

Pay attention to the following matters when assembling injection nozzle.

Cautions

- After assembling the injection nozzle, check the injection starting pressure and atomizing condition.
- Tighten the nozzle body on the nozzle holder to the specified torque.

Nozzle tightening torque:
78.4~98.1N·m(8~10kg·m, 58~72ft·lb)

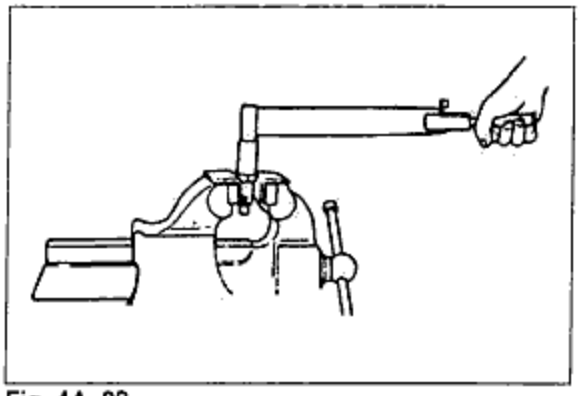

Fig. 4A-38

◆ INSTALLING

Install in reverse order of removal.

Cautions

- The gasket and corrugated gasket are not to be reused.
- Tighten the injection nozzle on the cylinder head to the specified troque.
- Face the red paint applied side to the injection nozzle when installing the corrugated gasket.

Nozzle tightening torque:
58.8~68.6N·m(6~7kg·m, 43~52ft·lb)

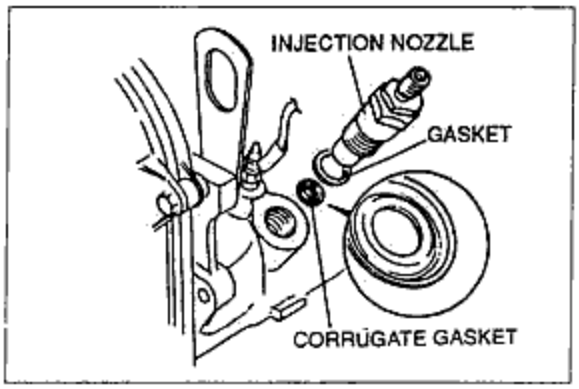

Fig. 4A-39

◆ MANIPULATION OF COLD START DEVICE

When pulling the CSD knob, injection timing is BTDC 8° and the idle speed increases.

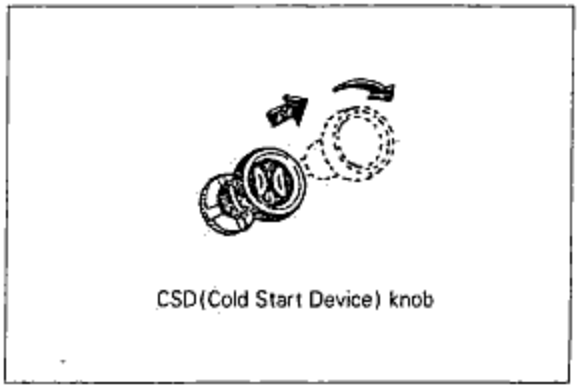

Fig. 4A-40

◇ CSD CABLE AND LINKAGE

◆ INSPECTION AND ADJUSTMENT

1. Check the deflection of the CSD cable.
   Standard deflection: 1~3mm(0.040~0.118in)
2. If the deflection exceeds the standard value, adjust with the adjusting nut.
3. Pull the idle-up lever lightly and check the play.
   Standard play: 2~3mm(0.079~0.118in)
4. If the play exceeds the standard value, adjust with the adjusting screw.

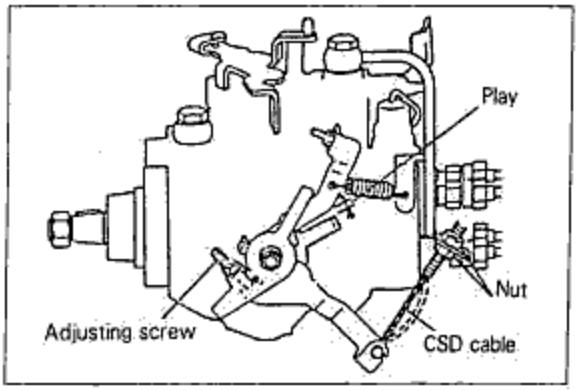

Fig. 4A-41

ENGINE SPEED

INSPECTION AND ADJUSTMENT

1. Warm up the engine.
2. Install the tachometer.
3. Pull the pulley and set the CSD knob.
4. Measure the engine speed.
   Standard speed: 1,200 ~ 1,500rpm
5. Adjust the engine speed with the adjusting screw, until the engine speed is in the standard speed.

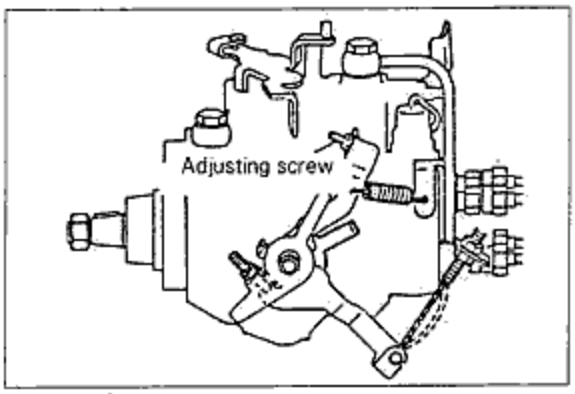

Fig. 4A-42

PICK-UP SENSOR

INSPECTION

1. Remove the pick-up sensor coupler.
2. Inspect the terminals with the tester.
3. If there is continuity, it's O.K

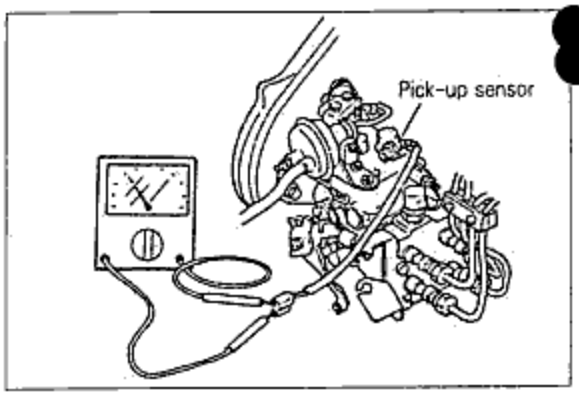

Fig. 4A-43

AIR CLEANER

CLEANING OF ELEMENT

Clean the element completely by removing dust with the compressed air.

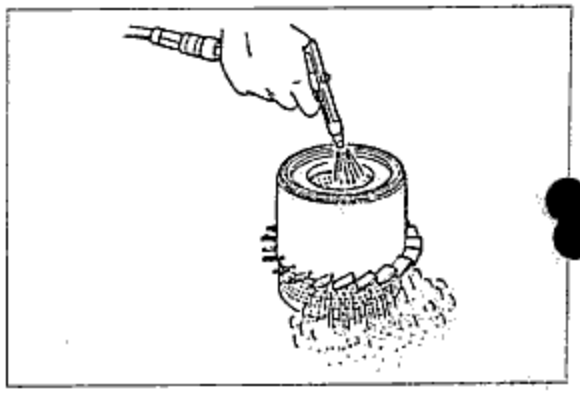

Fig. 4A-44

ACCELERATOR LINKAGE

INSPECTION AND ADJUSTMENT

1. Measure the deflection of the cable on the injection pump.
   If the deflection is not between 1 ~ 3㎜ (0.040 ~ 0.118in), adjust with the nut(A).
2. Press the accelerator pedal to the floor and check whether the pedal reaches the stopper bolt or not.
   If there is anything wrong, adjust with the bolt(B).

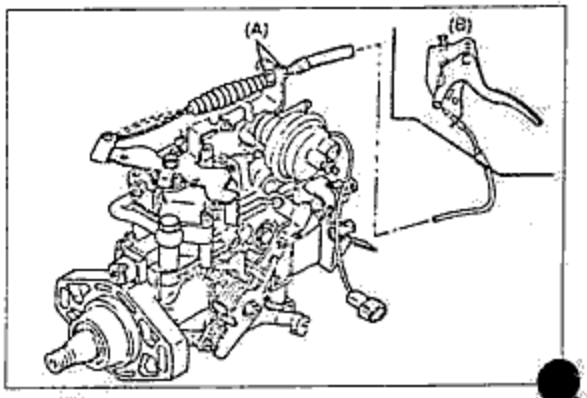

Fig. 4A-45

AIR-BLEEDING

BLEEDING AIR FROM INJECTION PUMP

If the engine should run out of fuel during operation and air enters the injection system or whenever the injection pump is removed, the system must be airbleed in the following manner.

1. Bleed air from the fuel filter.
2. Pump the head of the fuel filter repeatedly until it becomes hard(about 15 times).

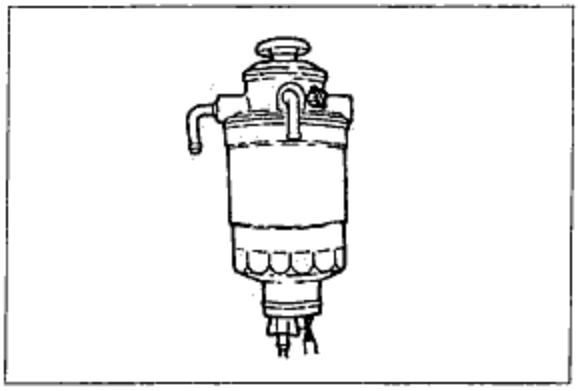

Fig. 4A-46

MEMO

ASIA FUEL, INTAKE · EXHAUST SYSTEM 4B

- OUTLINE ····· 4B—2
  - STRUCTURAL VIEW(FUEL, INTAKE, EVAPORATIVE EMISSION) ····· 4B—2
  - STRUCTURAL VIEW(EMISSION, EXHAUST) ··· 4B—3
  - SYSTEM DIAGRAM ····· 4B—4
  - EMISSION CONTROL SYSTEM ····· 4B—5
- SPECIFICATIONS ····· 4B—5
- TROUBLESHOOTING GUIDE ····· 4B—6
- ACCELERATOR LINKAGE ····· 4B—7
  - ADJUSTMENT ····· 4B—7
- FUEL PUMP ····· 4B—8
  - PRESSURE TEST ····· 4B—8
  - FLOW RATE TEST(VOLUME) ····· 4B—8
  - REMOVAL ····· 4B—8
  - INSTALLATION ····· 4B—8
- FUEL TANK ····· 4B—9
  - REMOVAL ····· 4B—9
  - INSTALLATION ····· 4B—9
- FUEL FILTER ····· 4B—9
  - REMOVAL AND INSTALLATION ····· 4B—9
- CARBURETOR ····· 4B—10
  - STRUCTURAL VIEW ····· 4B—10
  - SPECIFICATIONS ····· 4B—12
  - DISASSEMBLY ····· 4B—12
  - INSPECTION ····· 4B—15
  - ASSEMBLY ····· 4B—16
  - INSTALLATION ····· 4B—22
- EGR(Emission Gas Regulation) CONTROL SYSTEM ····· 4B—22
  - INSPECTION ····· 4B—22
  - INSPECTION OF EGR CONTROL VALVE ····· 4B—23
- EGR MODULATOR VALVE ····· 4B—23
  - INSPECTION ····· 4B—23
- EGR SOLENOID ····· 4B—23
- EVAPORATIVE EMISSION CONTROL SYSTEM ····· 4B—24
  - INSPECTION OF NO. 1 PURGE CONTROL ····· 4B—24
  - INSPECTION OF NO. 2 PURGE CONTROL VALVE ····· 4B—24
  - AIR VENT SOLENOID VALVE ····· 4B—25
  - INSPECTION OF WATER THERMO VALVE ··· 4B—25
  - INSPECTION OF CHECK VALVE ····· 4B—25
- IDLE-UP SYSTEM ····· 4B—26
  - ADJUSTMENT ····· 4B—26
- IDLE-UP ELECTRIC LOAD OR POWER STEERING ····· 4B—27
  - ADJUSTMENT ····· 4B—27
- POSITIVE CRANKCASE VENTILATION(PCV) SYSTEM ····· 4B—29
  - INSPECTION OF PCV VALVE ····· 4B—29
- AIR INLET TEMPERATURE CONTROL SYSTEM ····· 4B—30
  - INSPECTION ····· 4B—30
- HOT IDLE COMPENSATION SYSTEM ····· 4B—31
  - INSPECTION ····· 4B—31

⊠ OUTLINE

◈ STRUCTURAL VIEW(FUEL, INTAKE, EVAPORATIVE EMISSION)

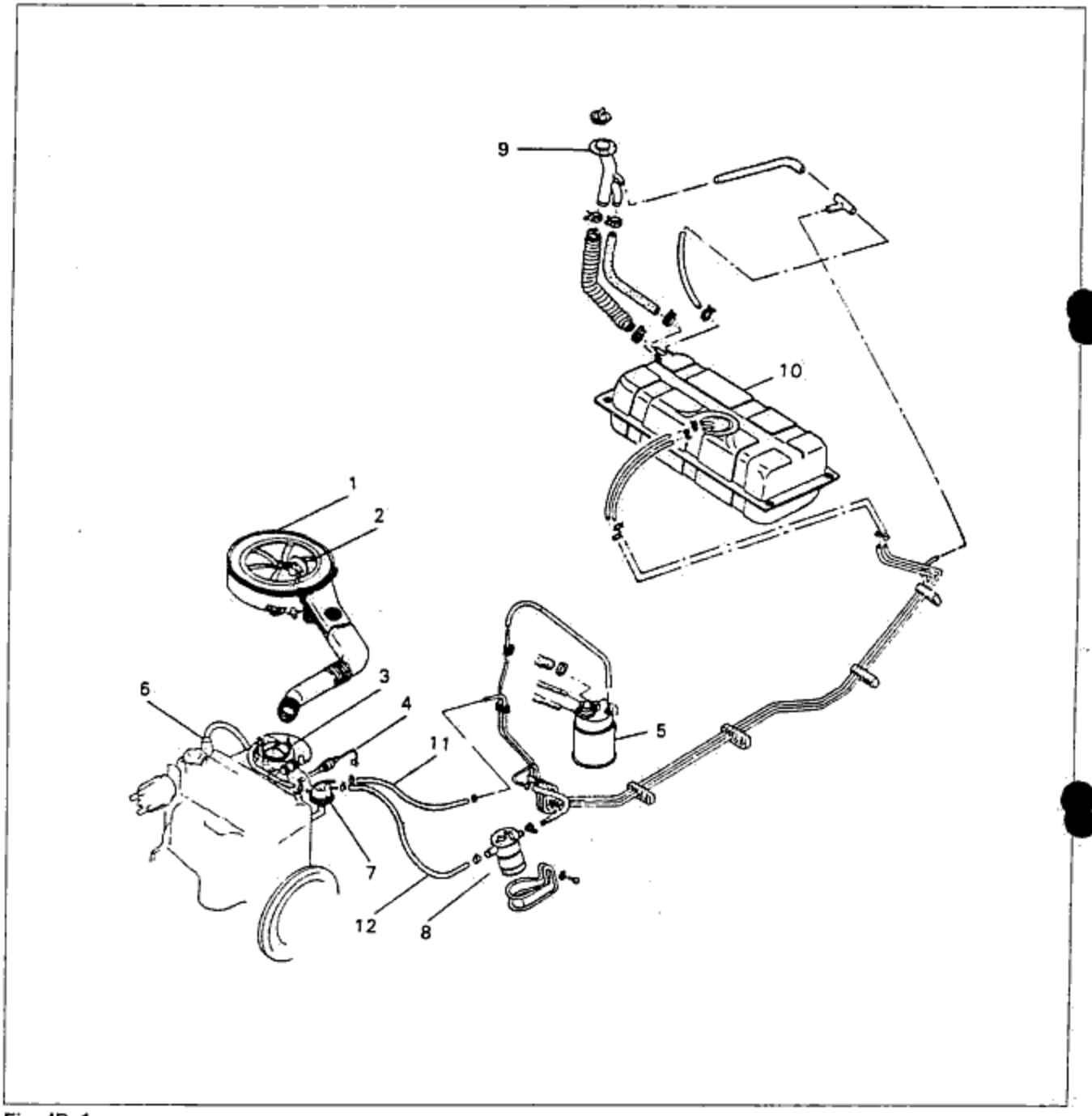

Fig. 4B-1

1. Air cleaner
2. Idle compensation system
3. Carburetor
4. Accelerator cable
5. Charcoal canister
6. P.C.V(Positive Crankcase Ventilation) valve
7. Fuel pump
8. Fuel filter
9. Vacuum valve attaching filler cap
10. Fuel tank
11. Fuel return hose
12. Fuel feed hose

SYSTEM DIAGRAM

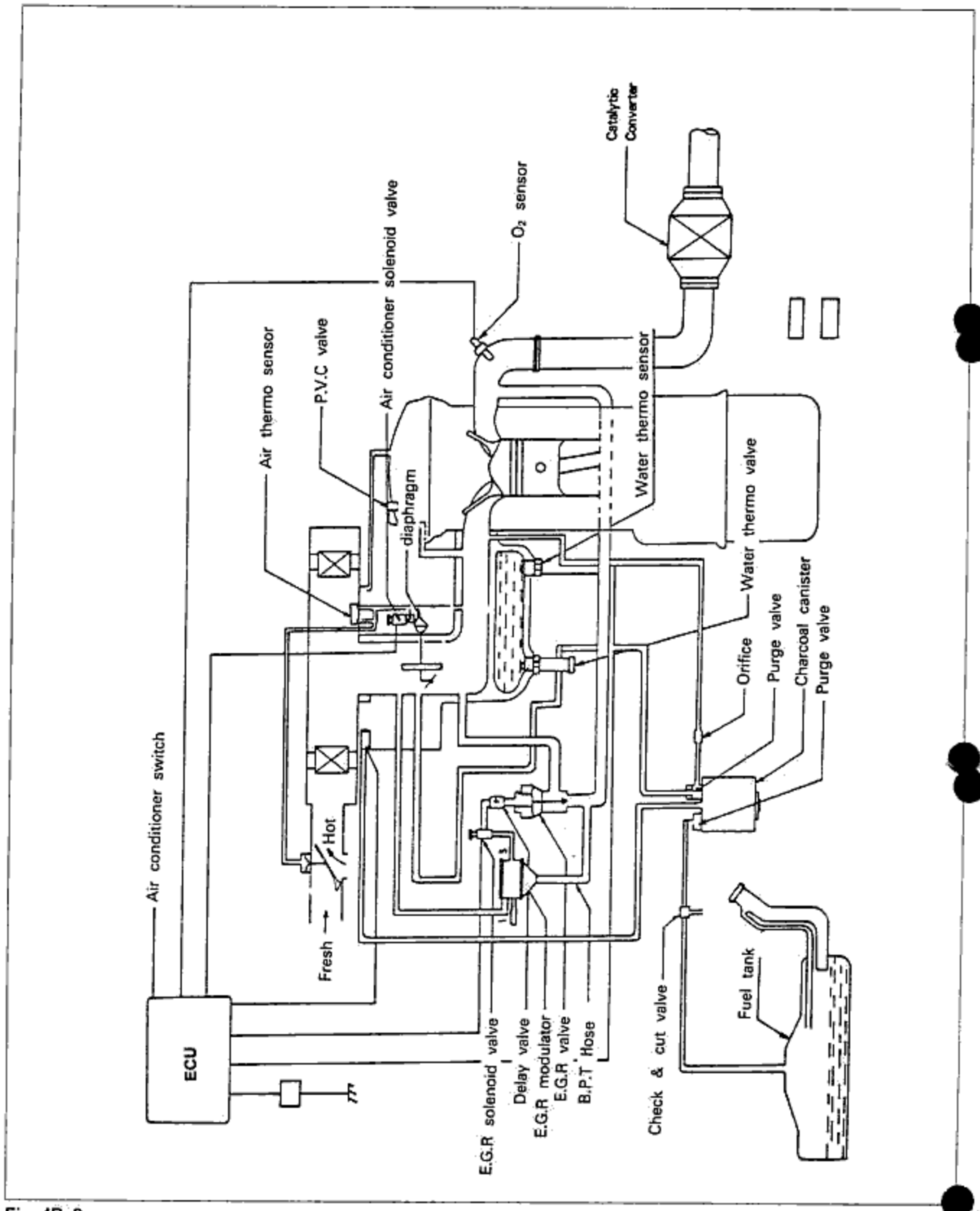

Fig. 4B-3

◆ STRUCTURAL VIEW(EMISSION, EXHAUST)

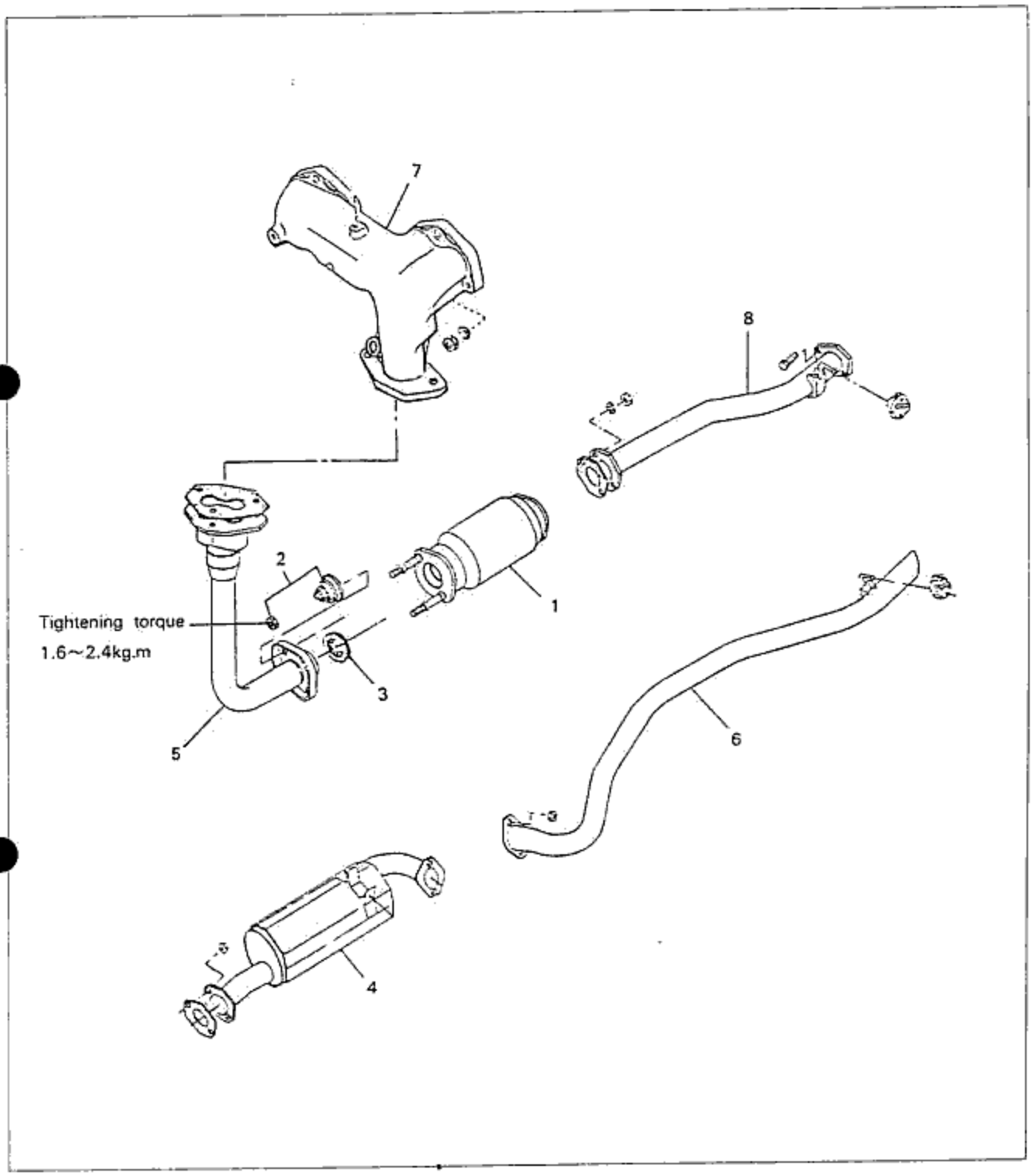

Fig. 4B-2

1. Catalyst converte.
2. Nut & spring
3. Sealing
4. Main silenser
5. NO.1 pipe
6. Tail pipe
7. Exhaust manifold
8. NO.2 pipe

◈ EMISSION CONTROL SYSTEM

COMPONENT DESCRIPTIONS

Component	Function	Operation Range
Catalytic Converter	Reduces MC, CO, and NOx by chemical reaction	Functions, when operating engine
PCV valve	Controls blowby gas introduced into engine	Functions, when operating engine
Charcoal canister	Stores fuel tank fumes while engine stopped	Functions always
Purge valve	Controls evaporative fumes from canister to intake manifold	Functions above 55℃ of water temperature or more than idle opening angle.
Check valve	Controls pressure in the fuel tank within ±0.04kg/㎠	
Dash pot	Reduces CO and HC Prevents body vibration at deceleration	Functions at decleration
EGR System	· Water temperature switch(Manifold) Reduces NOx Improves drivability when cold	Functions above 60℃ and not below 60℃
	· Water temperature switch(Radiator) Reduces NOx Improves drivability when cold	Functions above 60℃ and not below 60℃

◇ SPECIFICATIONS

Fuel tank capacity		65 liters
Fuel pump	Type	Diaphragm type
	Injection pressure	0.20~0.30kg/㎠
	Injection rate	860cc(Engine speed 800rpm)
Fuel filter type		Filter paper
Air cleaner	Fresh-hot switching	Diaphragm type
	Element	Dry type

TROUBLESHOOTING GUIDE

Problem	Possible Cause	Correction
Hard starting	• Flooding	• Refer below to the section on flooding
	• Malfunction of fuel pump	• Replace
	• Improperly adjusted idle	• Adjust
	• Malfunction of choke	• Adjust
	• Malfunction in the slow fuel-cut solenoid valve	• Replace
	• Clogged jet(s)	• Clean
Rough idling	• Improperly adjusted idle	• Adjust
	• Flooding	• Replace
	• Damaged mixture–adjusting–screw	• Refer below to the section on flooding
	• Slow flow, clogged idle port	• Clean
	• Clogged main jet	• Clean
	• Malfunction of idle compensator valve	• Replace
	• Poor or damaged intake manifold gasket or carburetor insulator seal	• Tighten or replace
	• Throttle valve closes improperly or does not close	• Repair or replace
	• Malfunction in slow fuel-cut solenoid valve	• Replace
	• Broken, worn, or disconnected vacuum hose	• Replace or repair
Flooding	• Damaged or improperly installed needle valve	• Clean or replace
	• Improperly adjusted float level	• Adjust
	• Excessive injection pressure in fuel pump	• Replace
	• Damaged float chamber gasket or loosened installing screw.	• Tighten or replace
	• Sunken float	• Adjust
Poor acceleration	• Malfunction in accelerator pump	• Replace
	• Malfunction in throttle valve	• Repair
	• Clogged jet(s)	• Clean
Poor operation at high speeds	• Clogged main jet	• Clean
	• Float level is too low	• Adjust
	• Malfunction in power valve	• Replace
	• Clogged fuel filter or fuel line	• Replace or clean
	• Dirty air cleaner element	• Replace
	• Insufficient discharge in fuel pump	• Replace
	• Improper opening of secondary valve	• Repair
Excessive fuel consumption	• Float level is too high	• Adjust
	• Clogged air cleaner	• Clean
	• Loosened jet(s)	• Tighten
	• Damaged gasket	• Replace
	• Improper opening of choke valve	• Repair
	• Improperly adjusted idle	• Adjust
	• Dirty air cleaner element	• Replace

ACCELERATOR LINKAGE

ADJUSTMENT

1. Warm up the engine to the normal operating temperature.

NOTE

Confirm that the choke valve is fully open and that the throttle valve is set to the correct idle opening.

2. Inspect the amount of play in the cable at the carburetor.
   If the play is not within 1~3mm(0.04~0.12in), adjust by using nut Ⓐ.
3. Press the accelerator pedal to the floor and confirm that the throttle valve is fully open. Adjust by using bolt Ⓑ if necessary.

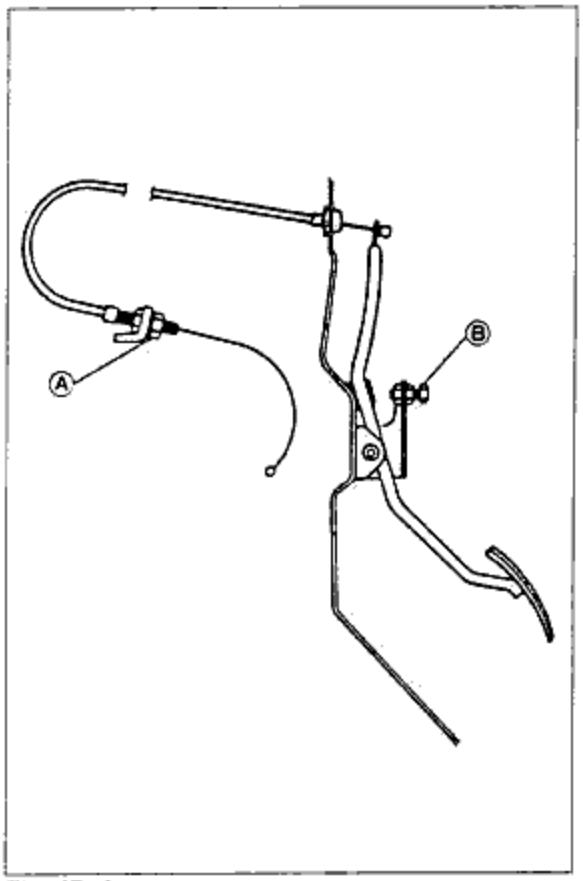

Fig. 4B-4

FUEL PUMP

PRESSURE TEST

1. Disconnect the hose at the carburetor and connect a fuel pressure gauge.
2. Disconnect the fuel return hose from the fuel pump and plug the fuel pump return pipe as shown in the figure.
3. Check pressure while the engine is idling. Replace the pump, if required.

   Standard pressure: 0.20~0.30kg/cm²
   (2.84~4.27lb/in²)

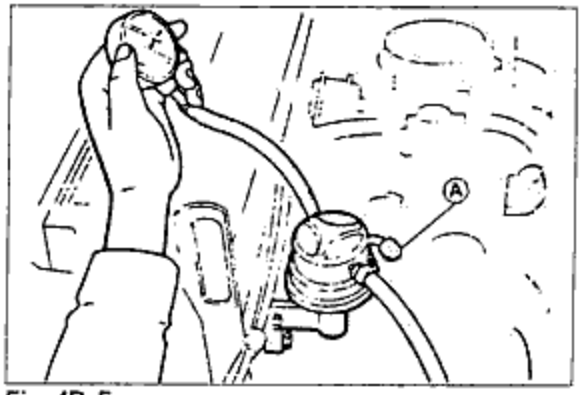

Fig. 4B-5

FLOW RATE TEST(VOLUME)

1. Disconnect the carburetor fuel hose and insert the end into a measuring beaker.
2. Disconnect the fuel return hose from the fuel pump and plug the fuel pump return pipe as shown in the figure.
3. Start the engine and measure the amount of fuel pumped within one minute.

   Volume: More than 860cc
   (Engine speed: 800rpm)

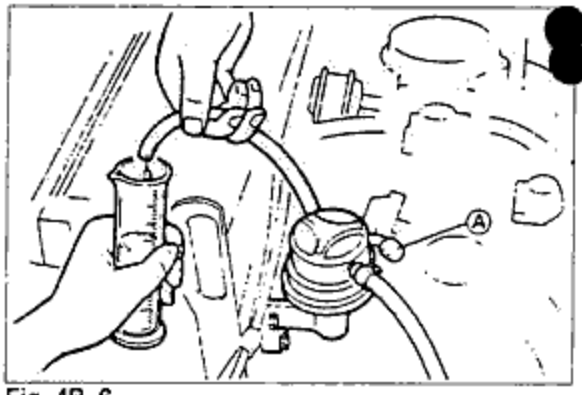

Fig. 4B-6

REMOVAL

1. Remove the following parts.
   (1) Fuel outlet hose
   (2) Fuel inlet hose
   (3) Fuel return hose
   (4) Fuel pump
   (5) Gasket
   (6) Insulator
   (7) Gasket

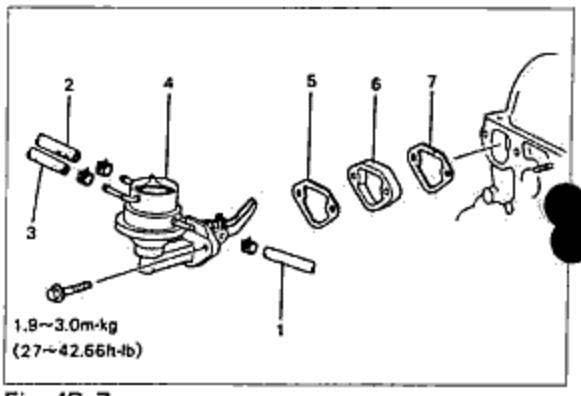

Fig. 4B-7

INSTALLATION

Install in the reverse order of removal and be careful of the following:

(a) Be sure to connect the hoses in the correct positions.
(b) Check for leaks.

FUEL TANK

REMOVAL

1. Remove the filler cap.
2. Remove the rear sheet.
3. Disconnect the gauge unit connector in the fuel tank and empty the fuel tank with proper pump.

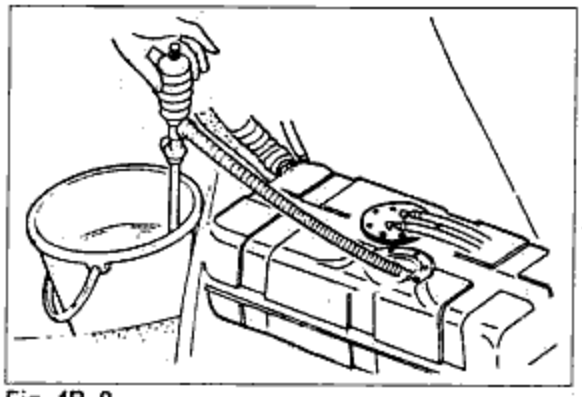

Fig. 4B-8

4. Raise the car on a jack and support it with safety stands.
5. Remove the following parts.
   (1) All hoses
   (2) Fuel tank

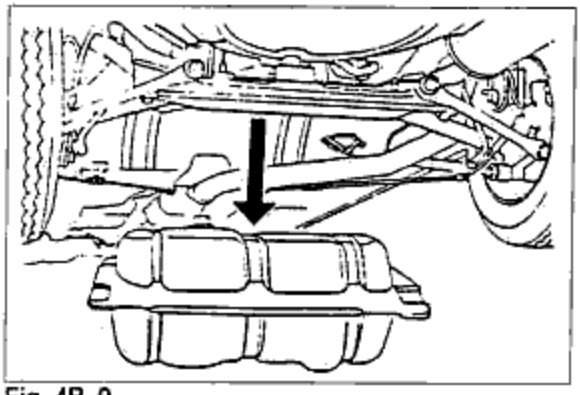

Fig. 4B-9

INSTALLATION

Install in the reverse order of removal and be careful of the following:

(a) Make sure to connect the hoses in the correct positions.
(b) Check for leaks.

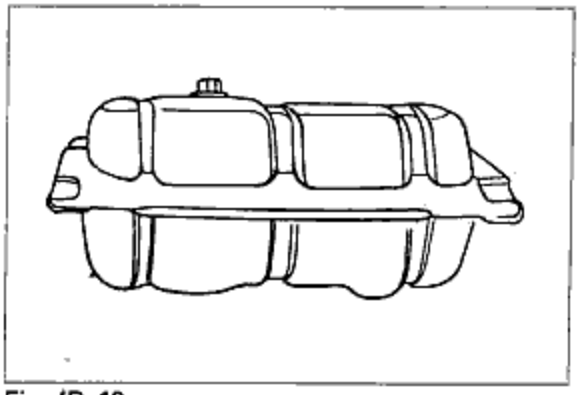

Fig. 4B-10

FUEL FILTER

REMOVAL AND INSTALLATION

Be sure to install in the correct direction.

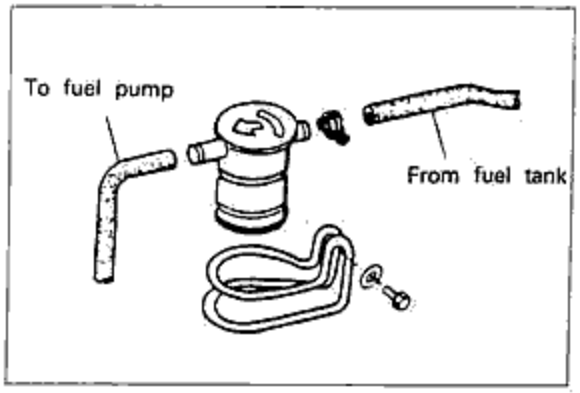

Fig. 4B-11

CARBURETOR

STRUCTURAL VIEW

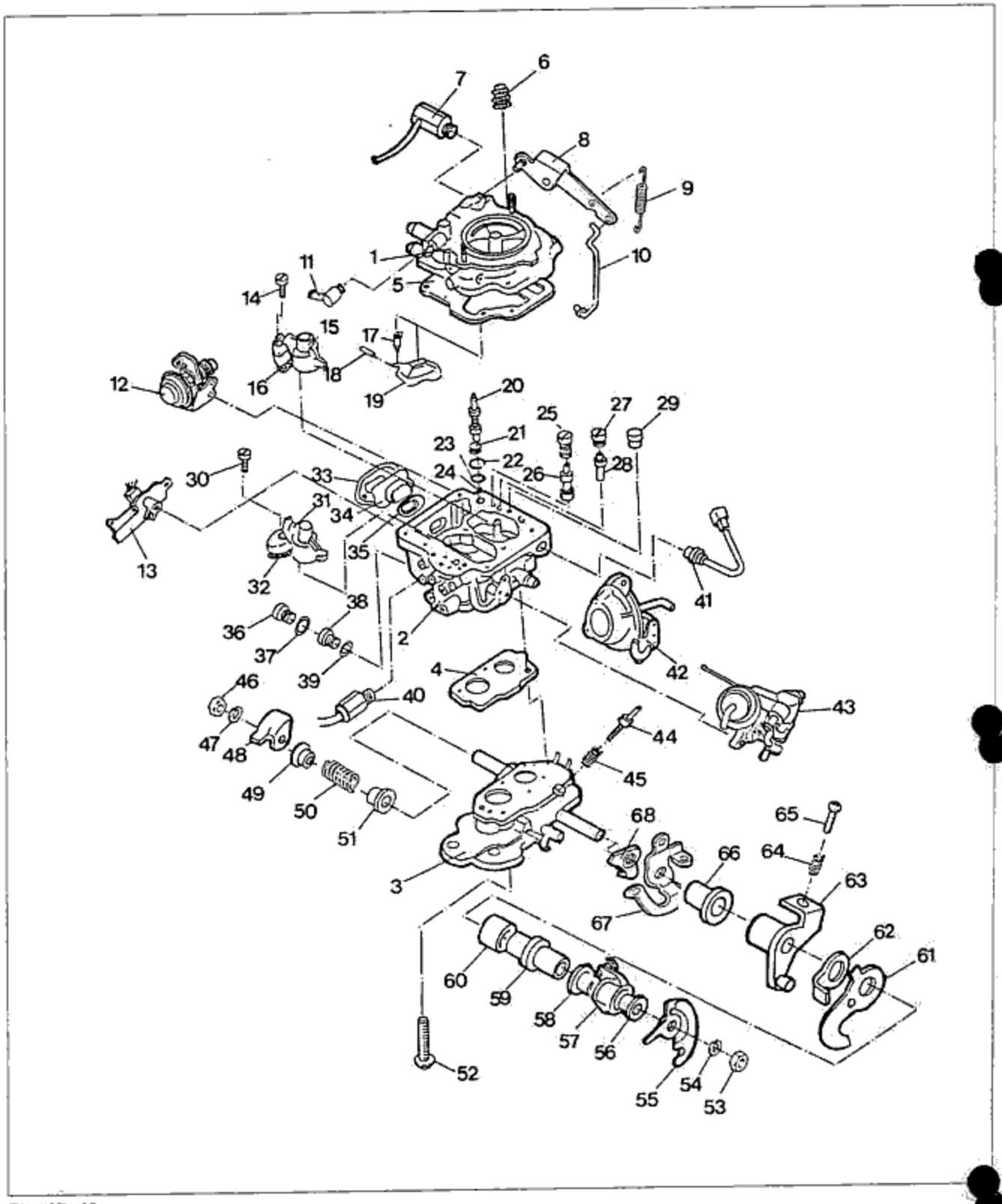

Fig. 4B-12

1. Air horn
2. Body group
3. Plunger group
4. Plunger gasket ASS'Y
5. Gasket
6. Bellow
7. Fuel union ASS'Y
8. Pump arm
9. Return spring
10. Pump rod
11. Fuel connector
12. Dashpot comp.
13. CAP, Vacuum pipe
14. 1st small venturi ASS'Y
15. Small venturi ASS'Y
16. Small venturi gasket
17. Needle valve ASS'Y
18. Float pin
19. Float ASS'Y
20. Small venturi plunger
21. Pump return spring
22. Strainer pump clip
23. Strainer pump
24. Pump ball
25. Acceleration pump plug
26. Check valve seat comp
27. Slow passage plag
28. 1st slow jet
29. 2nd SAB jet
30. 2nd MAB jet ASS'Y
31. 2nd small venturi ASS'Y
32. Small venturi gasket
33. Float chamber gasket
34. Lever gauge glass
35. Lever gauge gasket
36. Main passage plug
37. Main passage gasket
38. 2nd main jet
39. Main jet gasket
40. Solenoid valve ASS'Y
41. Solenoid valve ASS'Y
42. 2nd diaphragm
43. Housing compl. wax
44. Throttle adjust screw
45. Throttle adjust spring
46. Nut
47. Spring washer
48. Dashpot arm
49. Bush
50. Throttle return spring
51. Bush
52. Set plunger screw
53. Nut
54. Spring washer
55. Throttle lever ASS'Y
56. Bush
57. Throttle opener lever comp.
58. Bush
59. Throttle shaft collar
60. Bush
61. PS connector arm ASS'Y
62. Arm
63. Collar 1st TH'
64. Spring
65. Screw fast idle cam adjust
66. Throttle shaft collar
67. Throttle adjust arm
68. TH'adjust

◆ SPECIFICATIONS

Idle speed		750 ± 50rpm
Dashpot adjusting speed		2000 ± 100rpm
Carburetor	Type(mm)	2 stages, 2 barrels
	Throat diameter(mm)	Primary : 30 Secondary : 34
	Venturi diameter(mm)	Primary : 23.5 × 15 × 8 Secondary : 29 × 14 × 7
	Main jet	Primary : #88 Secondary : #130
	Slow jet	Primary : #44 Secondary : #80
	Power jet	–
	Main air bleed	Primary : #65 Secondary : #50
	Slow air bleed	Primary : NO.1 : #100 NO.2 : #110 Secondary : NO.1 : #80 NO.2 : #50
	Slow economizer	ϕ 1.60

◆ DISASSEMBLY

1. Disassemble the accelerating pump arm and the rod.

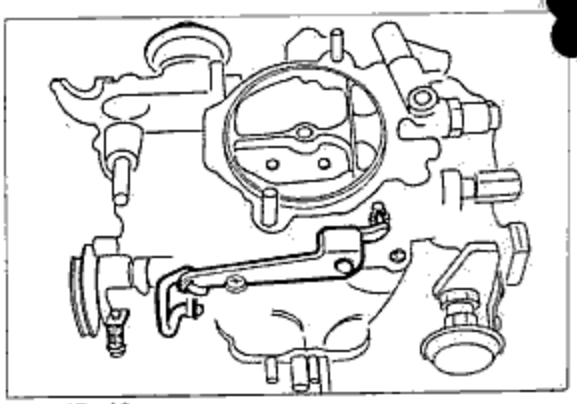

Fig. 4B-13

2. Air horn
   (1) Disassemble screws and air horn.
   (2) Disassemble air horn gasket.

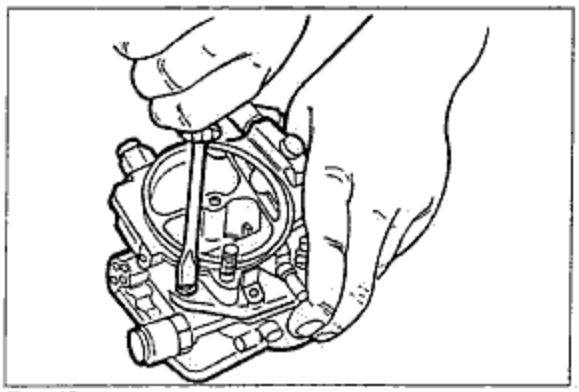

Fig. 4B-14

3. Disassemble the float and the needle valve.

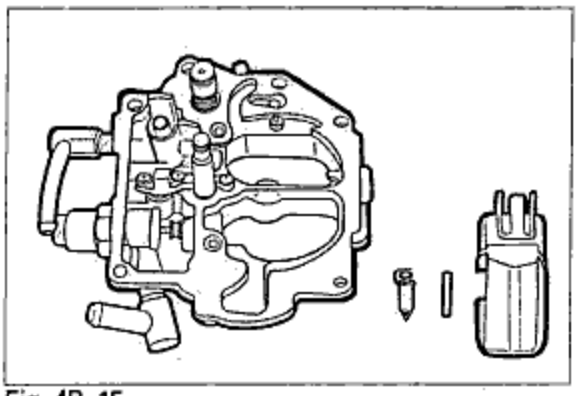

Fig. 4B-15

4. Accelerating pump piston
   (1) Disassemble the piston.
   (2) Disassemble the bellow.

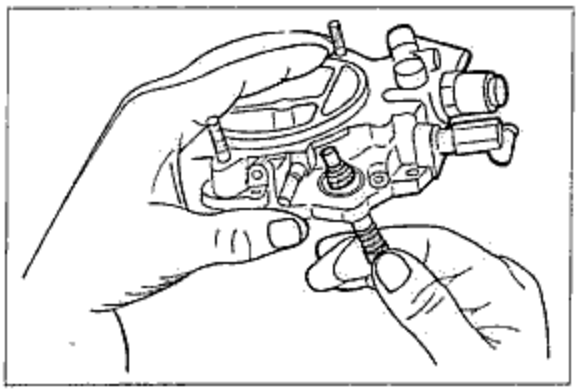

Fig. 4B-16

5. 2nd diaphragm
   (1) Disassemble the diaphragm and the 2nd shaft.
   (2) Disassemble the 2nd lock spring.
   (3) Loosen the bolt and disassemble the 2nd diaphragm.

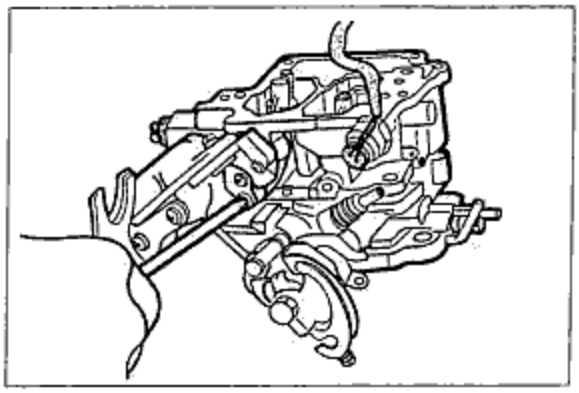

Fig. 4B-17

6. Disassemble the accelerating pump(inlet side).
   Disassemble the piston return spring, clip, strainer and the steel ball.

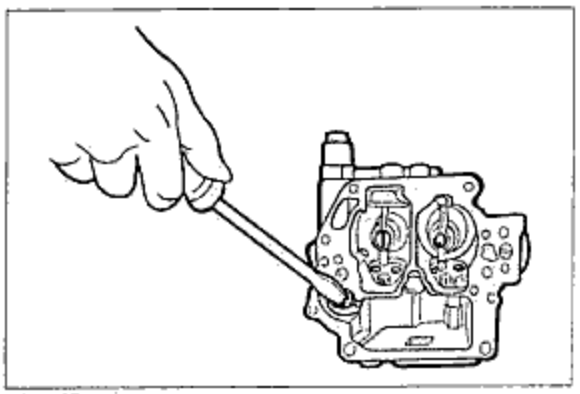

Fig. 4B-18

7. Disassemble the accelerating pump(outlet side).
   Loosen the plug and disassemble seat complete check valve.

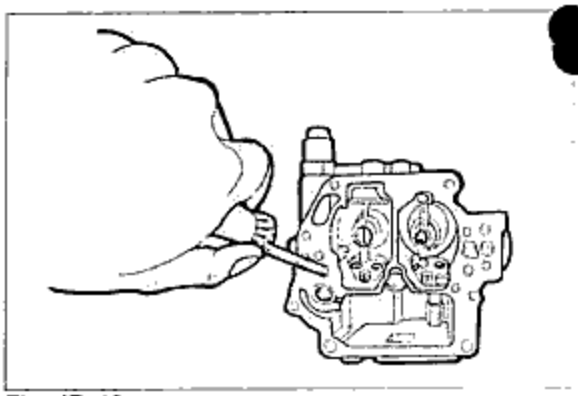

Fig. 4B-19

8. Disassemble the slow cut solenoid.
   Disassemble the solenoid, copper washer, spring and the needle valve.

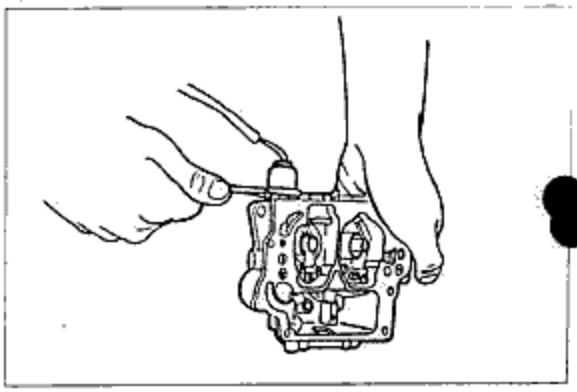

Fig. 4B-20

9. Disassemble the plunger.

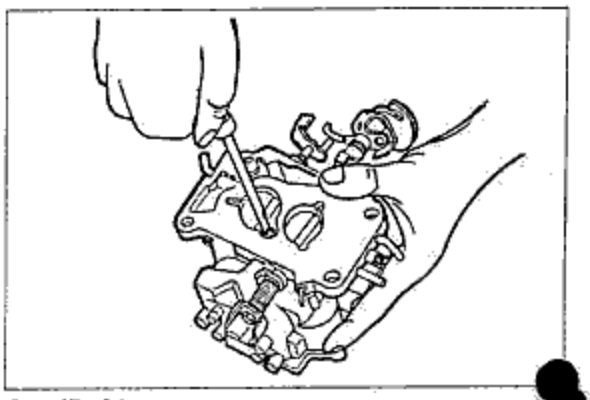

Fig. 4B-21

10. Disassemble the insulator Ass'y.

NOTE

Attach gaskets on both side of the insulator.

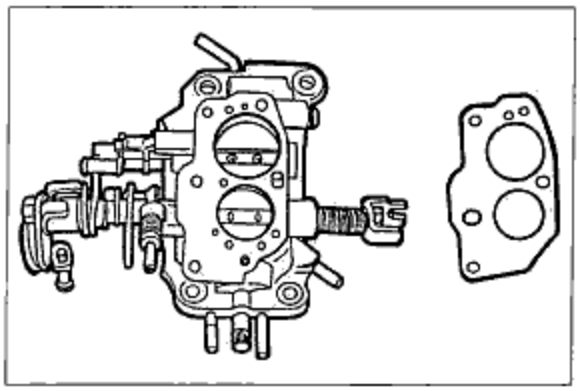

Fig. 4B-22

11. Disassemble the jet and the air bleed of the body.

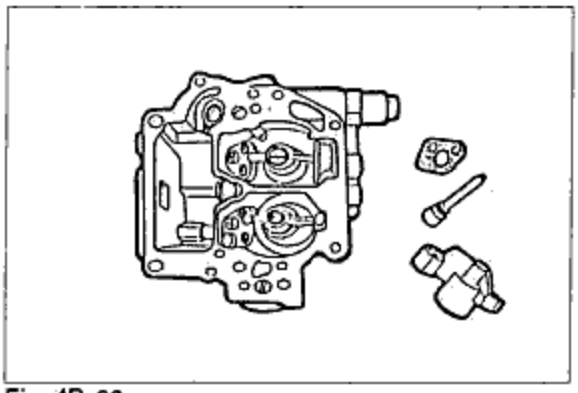

Fig. 4B-23

12. Disassemble the throttle lever.
Use strainer to loosen the throttle lever nut.

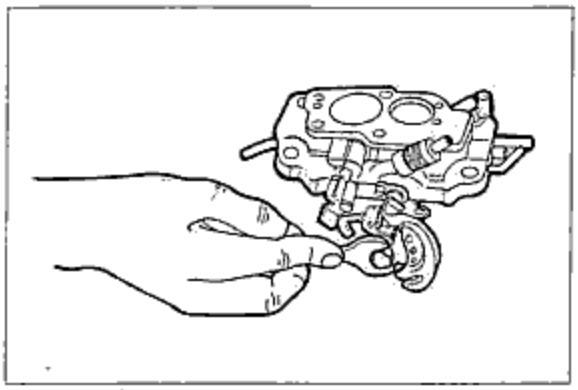

Fig. 4B-24

◈ INSPECTION

1. Visual inspection
Check the air horn, body, pulnger and other parts of the carburetor.

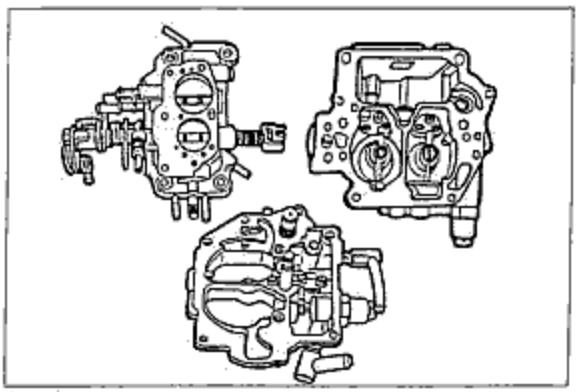

Fig. 4B-25

2. Check the float and needle valve for damage or wear.

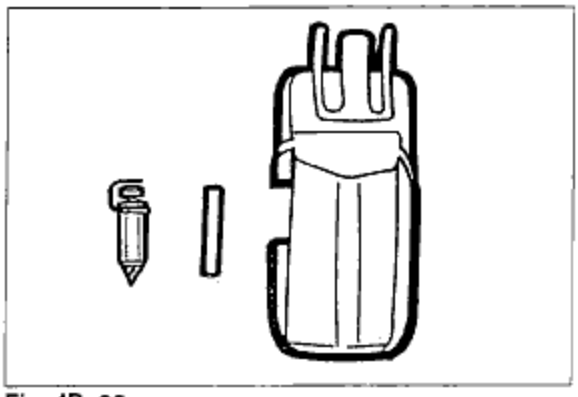

Fig. 4B-26

3. Check accelerating pump, piston and spring for damage or cut.

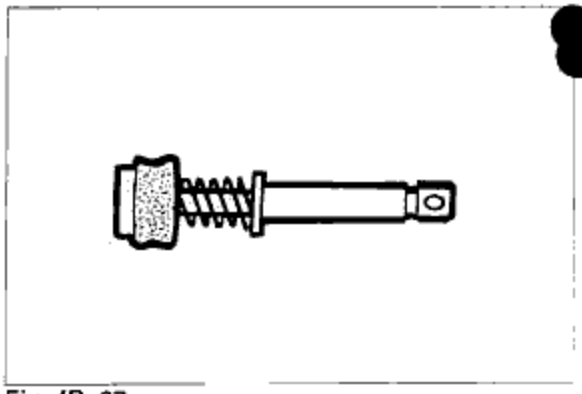

Fig. 4B-27

4. Check every jet and air bleeder for damage or clog.

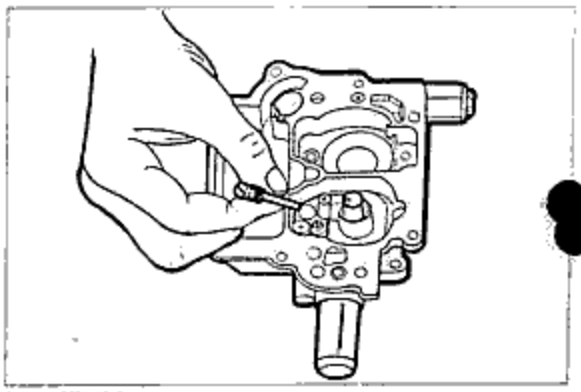

Fig. 4B-28

◆ ASSEMBLY

1. Assemble the throttle lever.

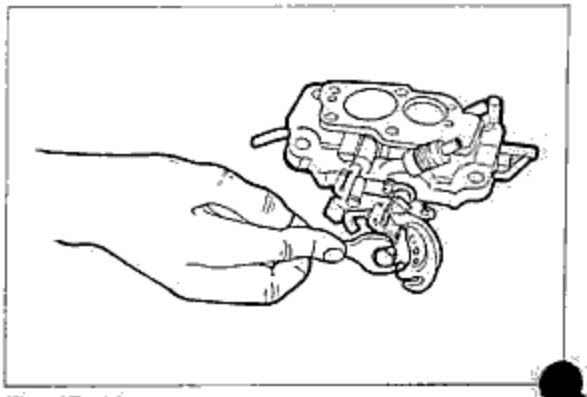

Fig. 4B-29

2. Assemble the air bleeder and jets including power jet.

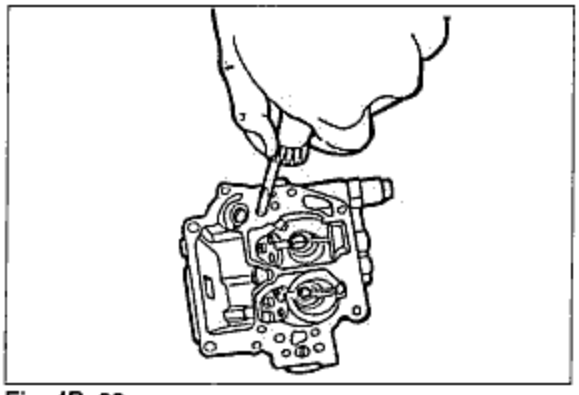

Fig. 4B-30

3. Assemble the insulator first and assemble the plunger and the body.

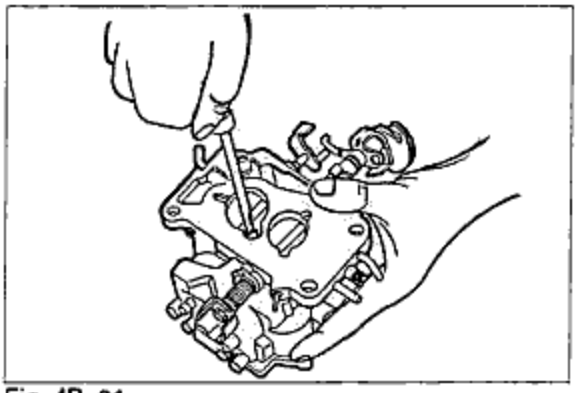

Fig. 4B-31

4. Assemble the needle valve, spring and washer first and assemble the slow cut solenoid valve.

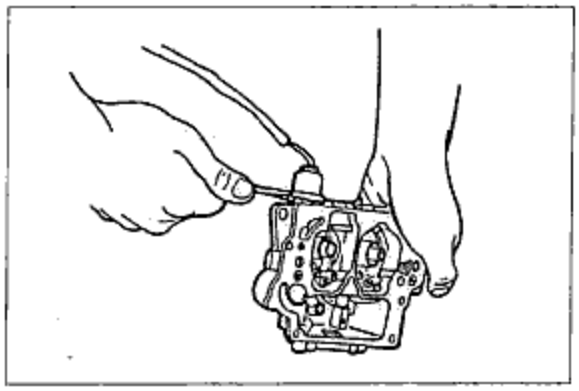

Fig. 4B-32

5. Assemble the accelerating pump(outlet side). Assemble the seat comp check valve and the plug.

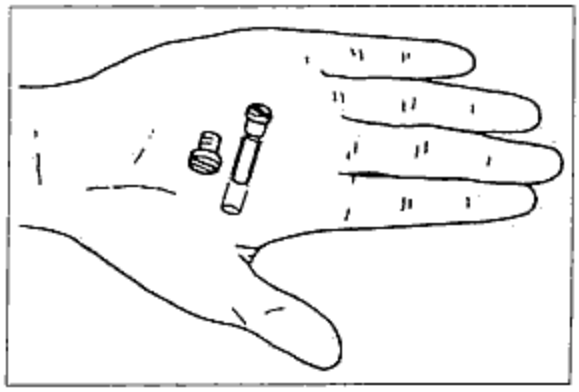

Fig. 4B-33

6. Assemble the accelerating pump(inlet side).
   (1) Check the position of the steel ball whether it's right or wrong.
   (2) Assemble the strainer, clip, piston and return spring.

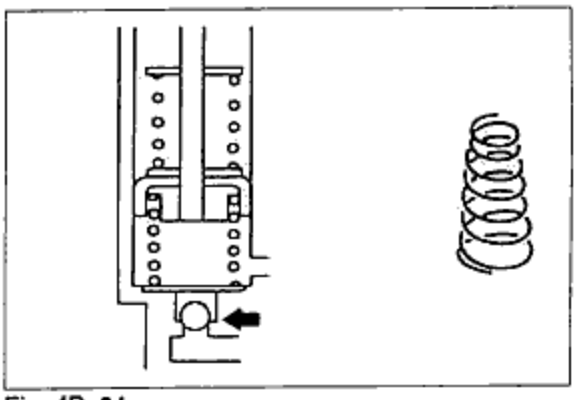

Fig. 4B-34

7. Assemble 2nd diaphragm assembly.
   Assemble the diaphragm, lock spring and the rod.

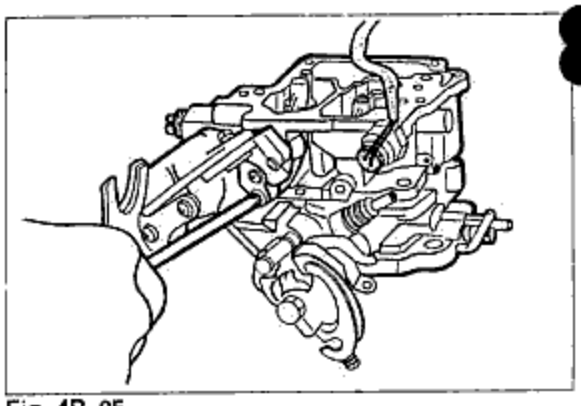

Fig. 4B-35

8. Assemble accelerating pump piston.
   Assemble the bellow first and assemble the piston.

NOTE

Be careful not to tear the bellow when you assemble the piston.

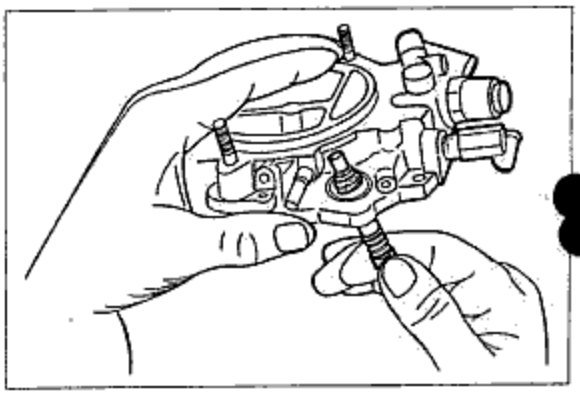

Fig. 4B-36

9. Assemble the float and needle valve.

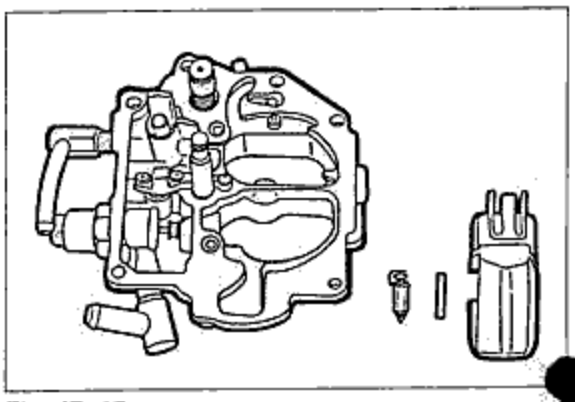

Fig. 4B-37

10. Check and adjust the float lever.

(1) Measure the clearance(H) between float and air horn when the air horn is upside down and the float comes down by its own weight.
Standard clearance: H = 6±0.5mm

NOTE

Measure the clearance with the air horn gasket installed.

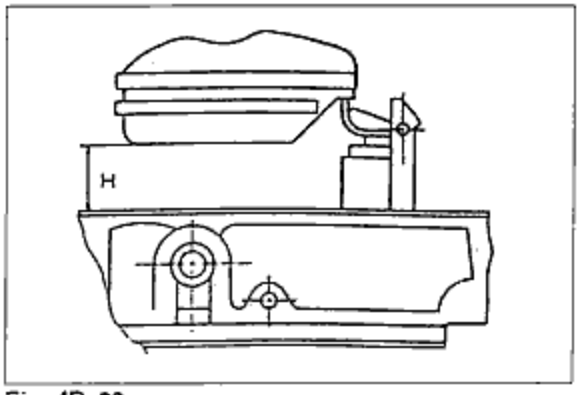

Fig. 4B-38

(2) You can adjust the clearance by bending the float lip.

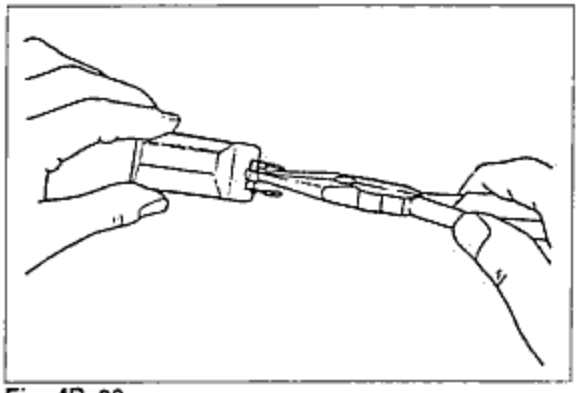

Fig. 4B-39

(3) Measure the clearance(L) between float and air horn when the air horn is lifted upright and the float comes down by its own weight.
Standard clearance: L = 45±0.5mm

NOTE

Measure the clearance with the air horn gasket installed.

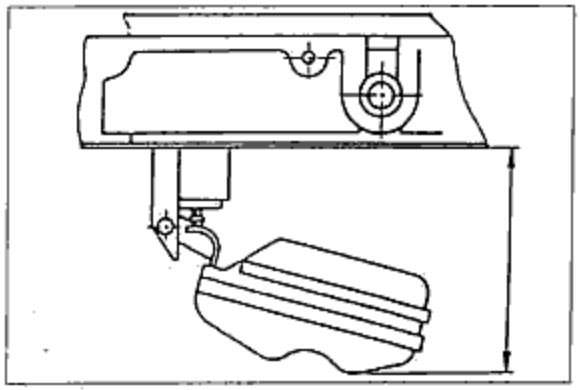

Fig. 4B-40

(4) You can adjust the clearance by bending the float stopper.

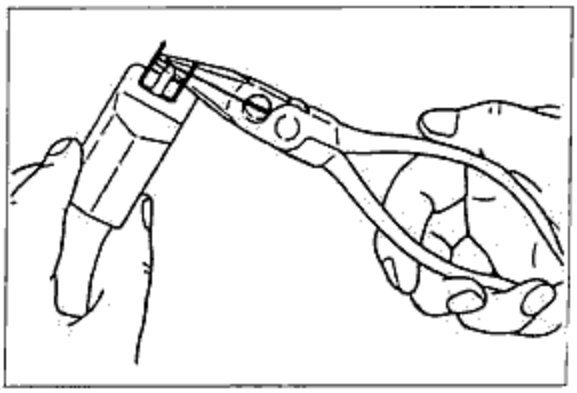

Fig. 4B-41

11. Assemble the air horn.
    Do not forget to attach the gasket.

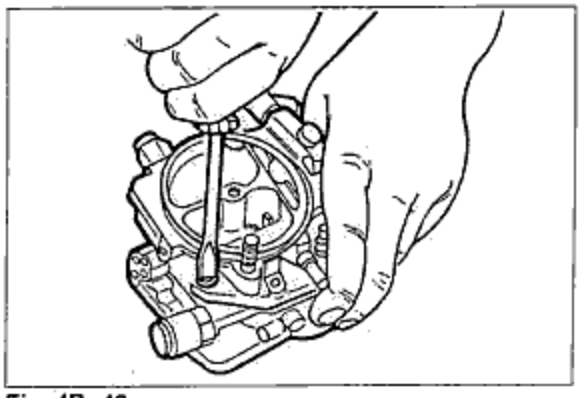

Fig. 4B-42

12. Assemble the acceleerating lever and rod.
    Assemble the accelerating pump and "E" clip, cotter pin and sub-retainer spring.

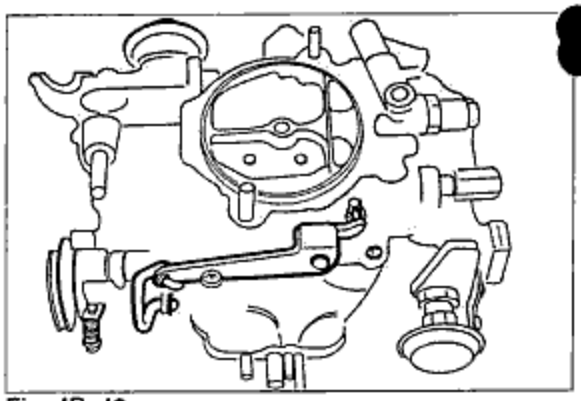

Fig. 4B-43

13. Check choke opener.
    (1) Check the choke whether it operated well or not.
    (2) Measure the amount of the choke opener when the vacuum of the diaphragm is −400mmHG.

    Standard clearance:
    20 ± 1mm(PIN:2.12 ± 0.12mm)

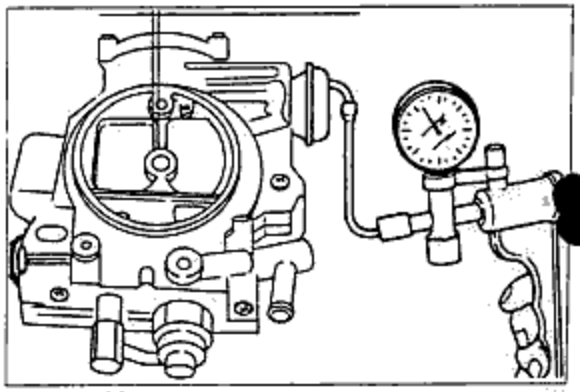

Fig. 4B-44

14. Measure and adjust fast idle opening.
    (1) Check throttle opening when the auto cam is at 2nd shift.

    Standard clearance:
    11 ± 1mm(PIN:0.78 ± 0.04mm)

    (2) If not as specified, adjust it by turning the adjusting screw.

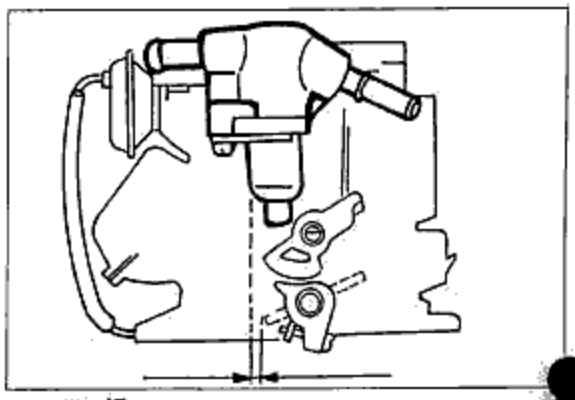

Fig. 4B-45

15. Check and adjust choke clearance.
   (1) Check throttle opening when the auto cam is at 3rd shift.

   Standard clearance:
   72±2mm(PIN:3.05±0.25mm)

   (2) If not as specified, adjust it by turning the adjusting screw.

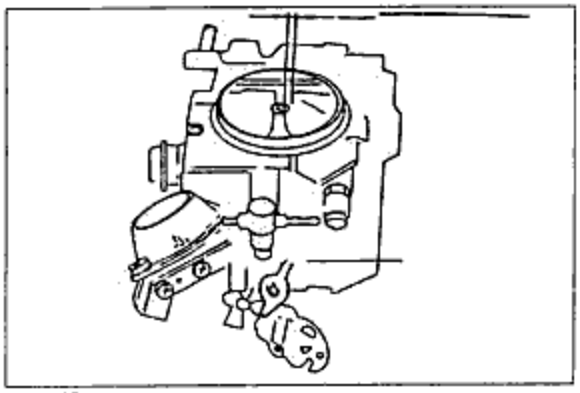

Fig. 4B-46

16. Check the clearance of the dash pot.
   Measure the touch angle of the dash pot.

   Standard clearance: 10±1mm

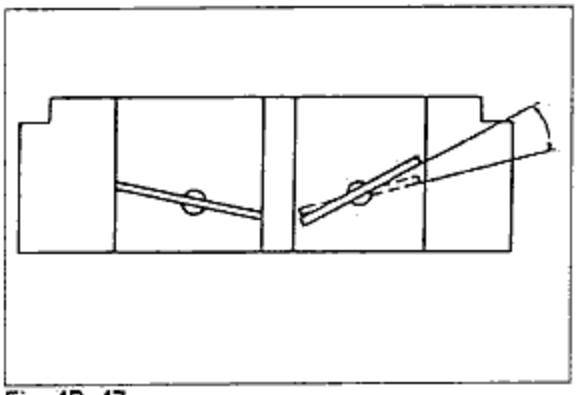

Fig. 4B-47

17. Unloader system
   (1) Open the primary throttle valve fully.
   (2) Measure the clearance of the choke valve.

   Standard clearance:
   30±3mm(PIN:3.4±0.35mm)

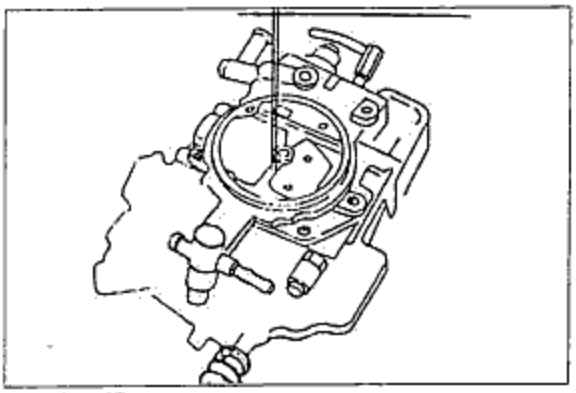

Fig. 4B-48

◆ INSTALLATION

1. Install the carburetor to the intake manifold with gasket.
2. Install the fuel hose and water hose.
3. Install the vacuum hose.
4. Install the accelerator cable.
5. Install the air cleaner.

⊠ EGR(Emission Gas Regulation) CONTROL SYSTEM

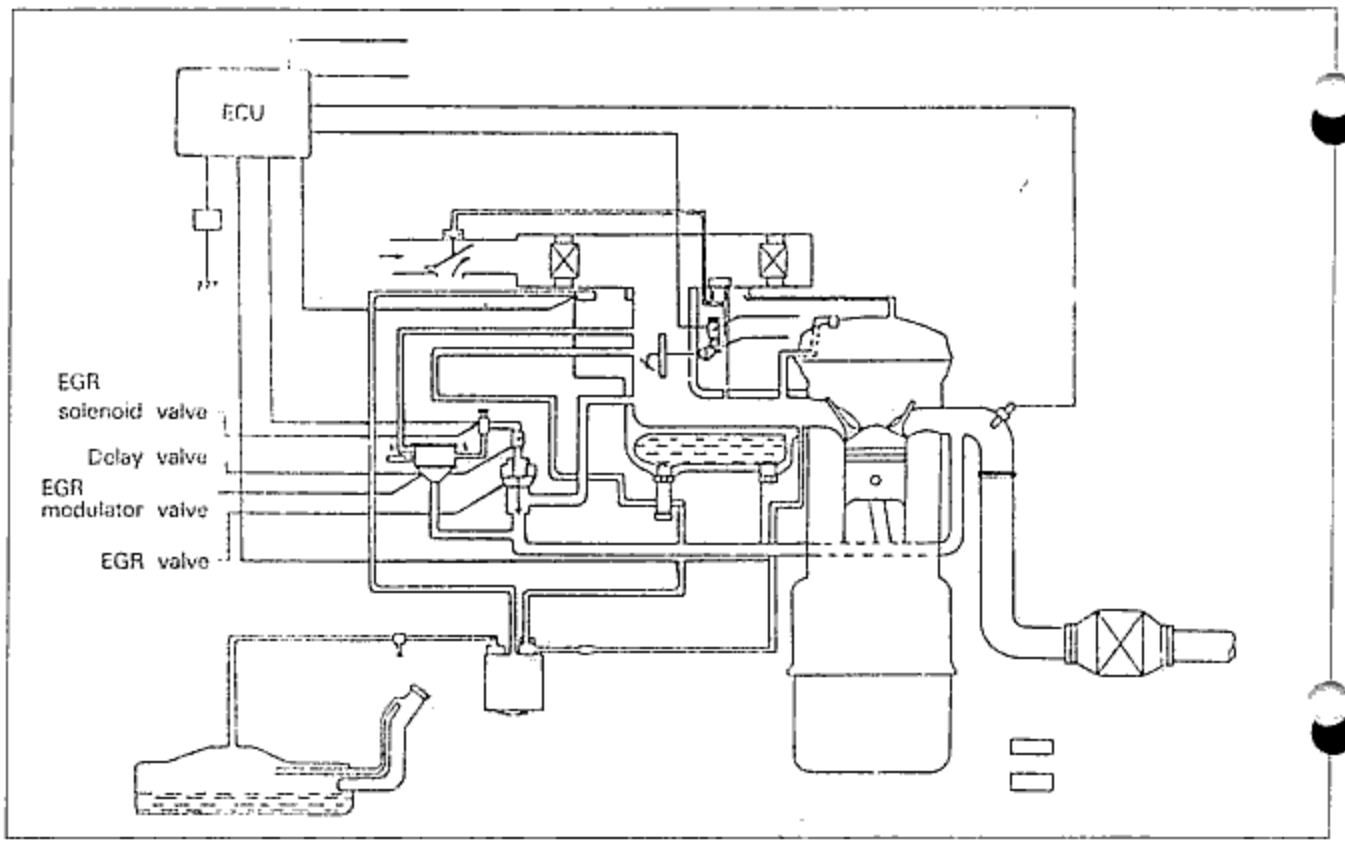

Fig. 4B-49

◆ INSPECTION

1. Warm up the engine and run it at idle.
2. Contact the finger to the EGR valve diaphragm.
3. Increase the engine speed to 2,000rpm.
4. Make sure the diaphragm operates.

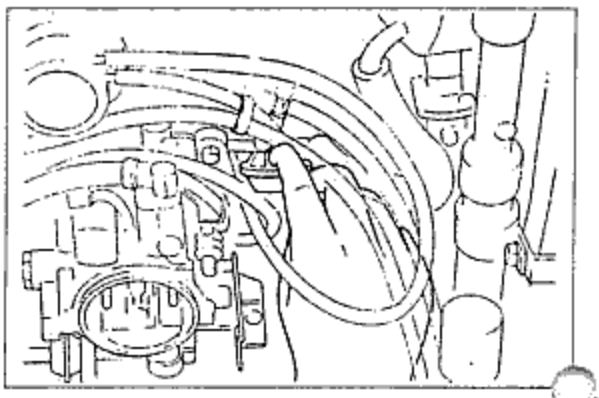

Fig. 4B-50

◆ INSPECTION OF EGR CONTROL VALVE

1. Warm up the engine and run at idle.
2. Disconnect the vacuum hose from the EGR control valve.
3. Attach a vacuum pump to the valve and apply vacuum.
4. Make sure engine runs roughly or stops at more than specified amount of vacuum.
   Specification: 150mmHg

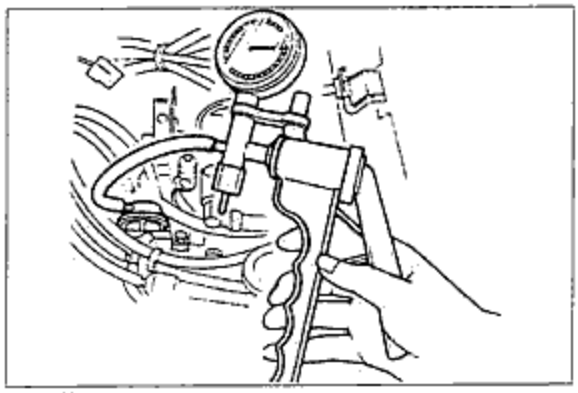

Fig. 4B-51

◇ EGR MODULATOR VALVE

◆ INSPECTION

1. Remove the valve.
2. Plug the No.3 and No.2 ports and attach a vacuum pump to the No.1 port.
3. Blow into the exhaust gas port.
4. Operate the vacuum pump and confirm that the vacuum is held.
5. Release the exhaust gas port and confirm that the vacuum is released.

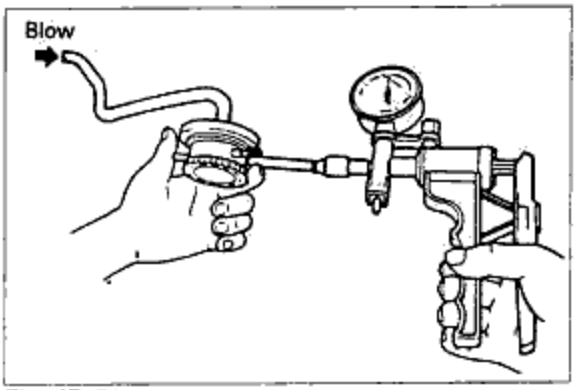

Fig. 4B-52

◇ EGR SOLENOID

1. Remove the vacuum hose to the solenoid side and then connect a vacuum pump.
2. Make sure the gauge shows no vacuum when the engine is cold.
3. Increase the engine speed enough, and make sure the gauge shows vacuum.

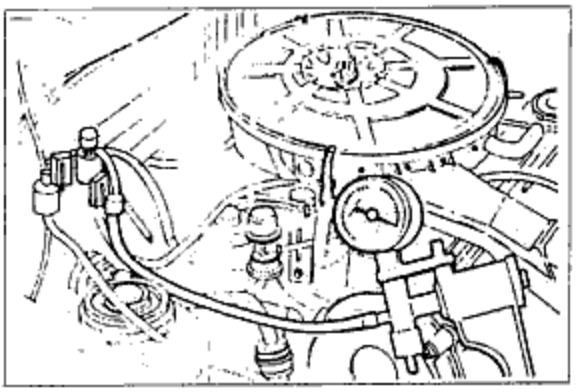

Fig. 4B-53

EVAPORATIVE EMISSION CONTROL SYSTEM

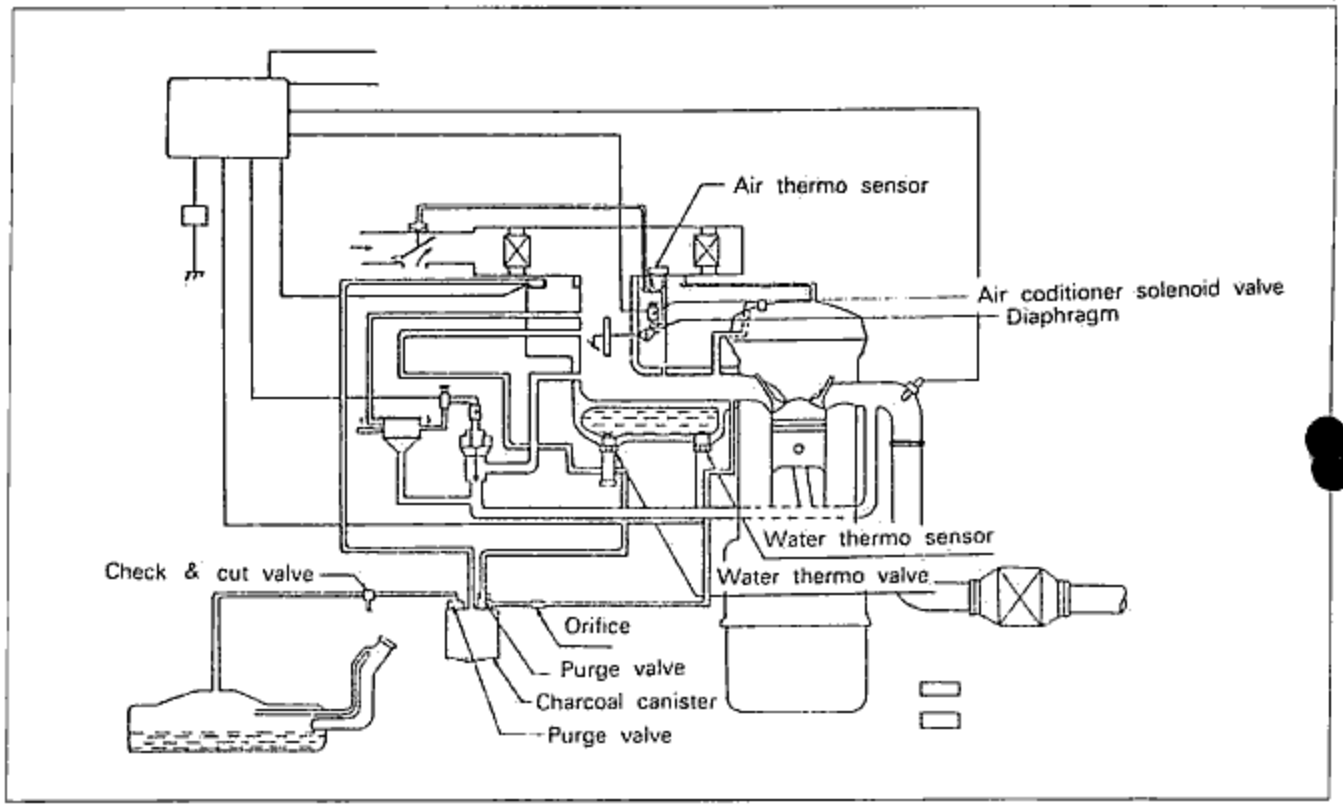

Fig. 4B-54

INSPECTION OF No.1 PURGE CONTROL

1. Blow through the purge control valve from port (A) and confirm that air does not flow into.
2. Connect vacuum pump to the purge control valve.
3. Apply a vacuum of 110mm-Hg(4.33 in-Hg) or above by using the vacuum pump, and blow through port(A) again.
4. Air should flow into port(A).

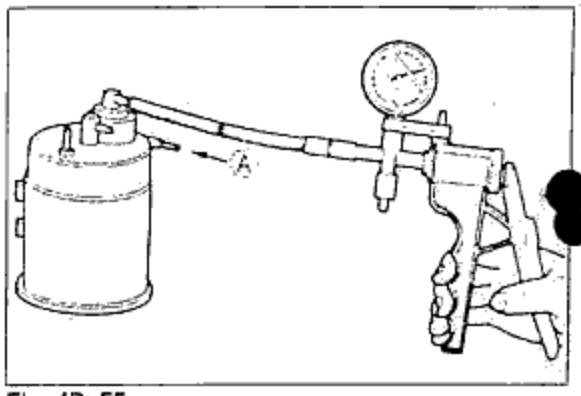

Fig. 4B-55

INSPECTION OF NO.2 PURGE CONTROL VALVE

1. Disconnect the vacuum tube (A) from the pipe.
2. Blow into the hose and make sure air flows freely.

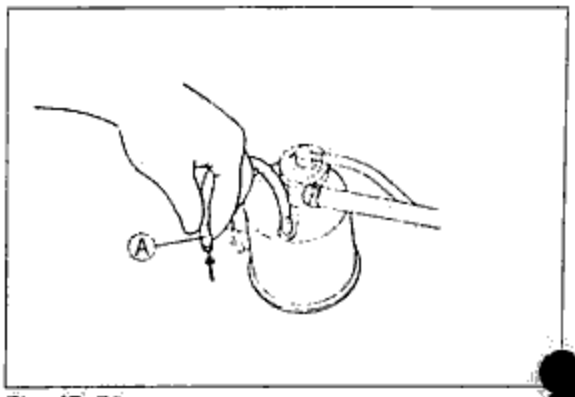

Fig. 4B-56

◆ AIR VENT SOLENOID VALVE

1. Remove the air cleaner.
2. Touch the air vent solenoid valve.
3. Operate the ignition switch "ON" and "OFF" several times.
4. Make sure the air vent solenoid valve makes odd sound.

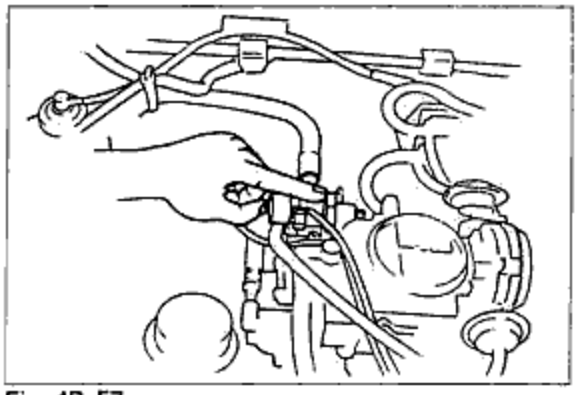

Fig. 4B-57

◆ INSPECTION OF WATER THERMO VALVE

1. Remove the water thermo valve from the intake manifold.
2. Immerse the water thermo valve in a container filled with water.
3. Heat up water gradually and observe the temperature.
4. Blow through the valve from the vacuum tube and if air comes out from the tube at 55℃(131°F) or above, the valve is functioning properly.

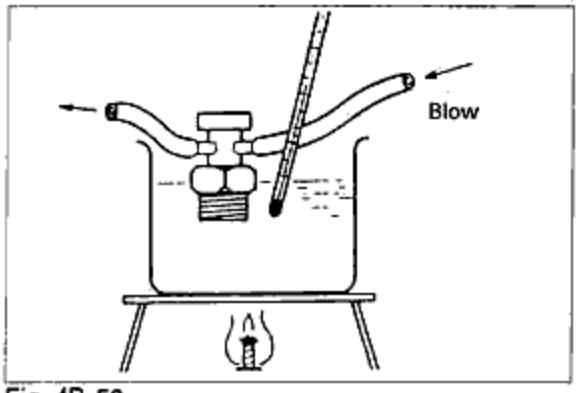

Fig. 4B-58

◆ INSPECTION OF CHECK VALVE

1. Remove the check valve.

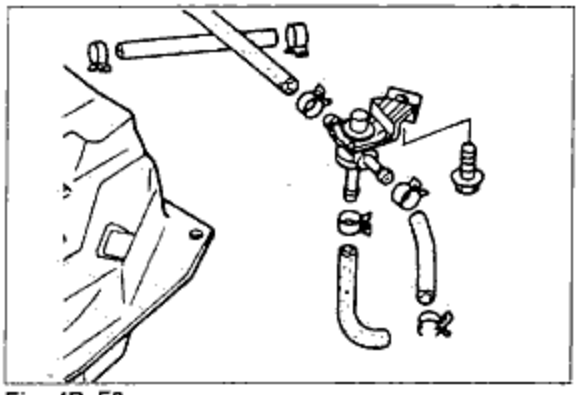

Fig. 4B-59

2. Blow through the three way check valve from port (A), and make sure that air comes out of port (B). Next, block port(B), and confirm that air comes out of port(C).
3. Block port (B), and blow through from port(C). If air comes out of port (A), the valve is functioning properly.

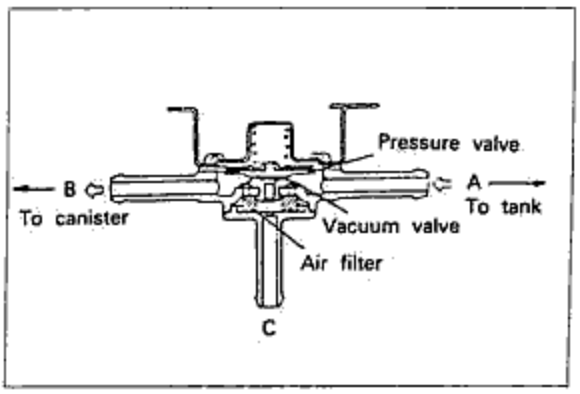

Fig. 4B-60

⊠ IDLE-UP SYSTEM

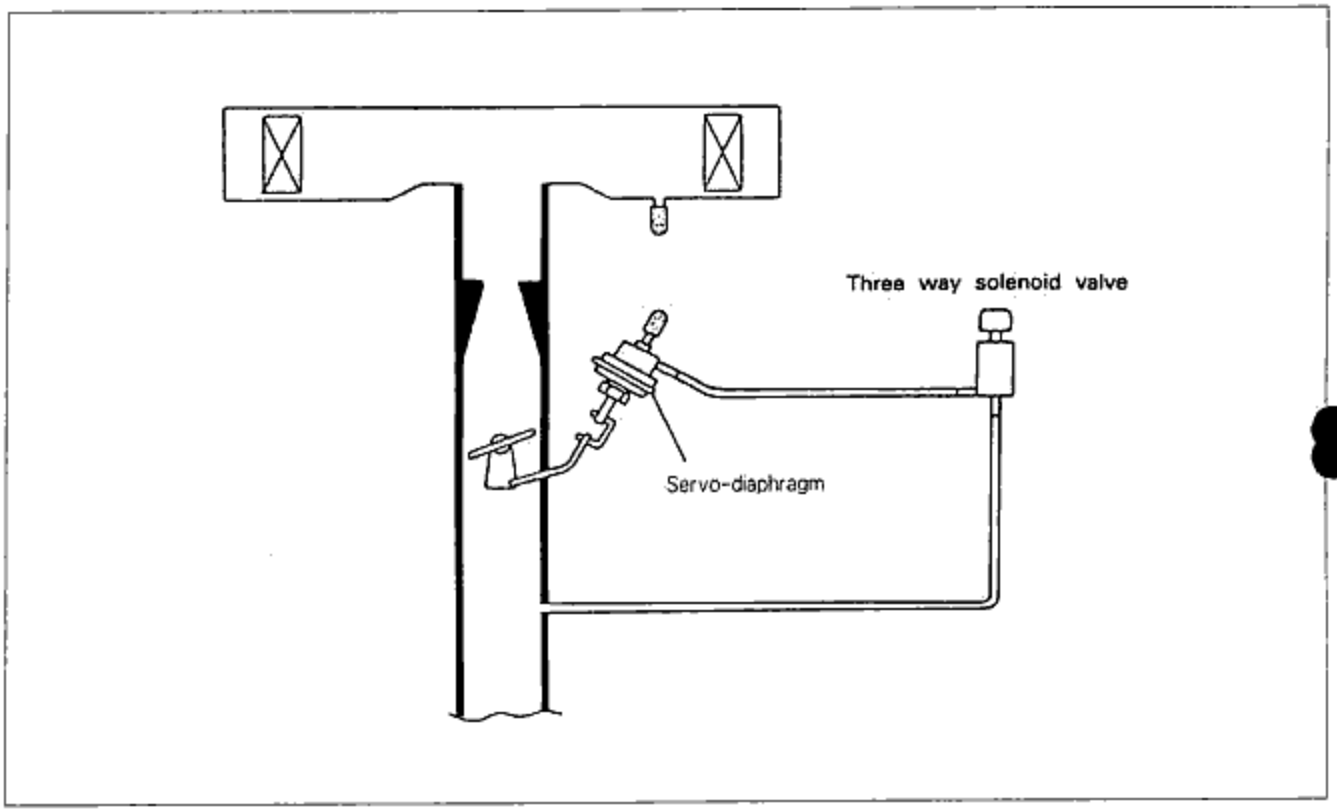

Fig. 4B-61

◈ ADJUSTMENT

1. Warm up the engine and run it at idle.
2. Connect a tachometer to the engine.
3. Remove the vacuum sensing hose from the servo-diaphragm.
4. Connect the servo-diaphragm to the intake manifold vacuum.

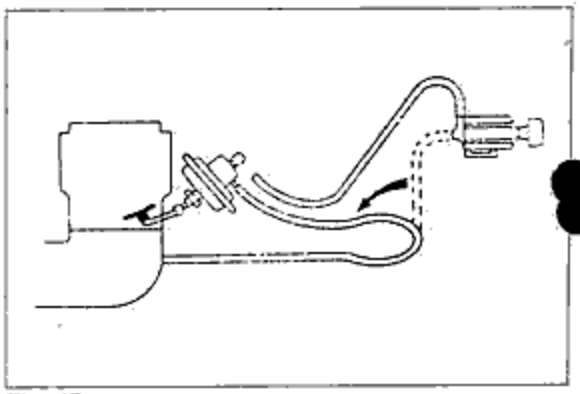

Fig. 4B-62

5. Increase the engine speed to 2,000rpm using the throttle lever and release it.
6. If the engine speed is not within standard rpm, adjust the engine speed using the adjusting screw.
   Standard: 750~800rpm

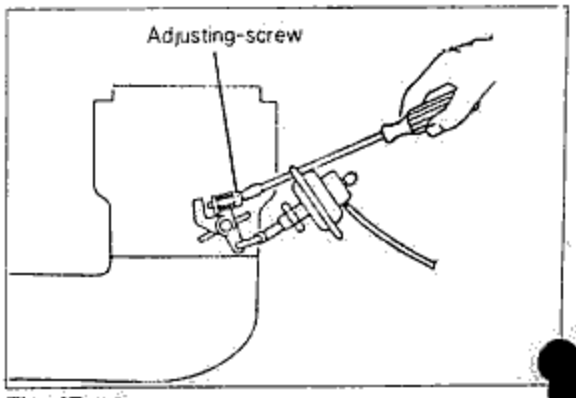

Fig. 4B-63

⊠ IDLE-UP ELECTRIC LOAD OR POWER STEERING

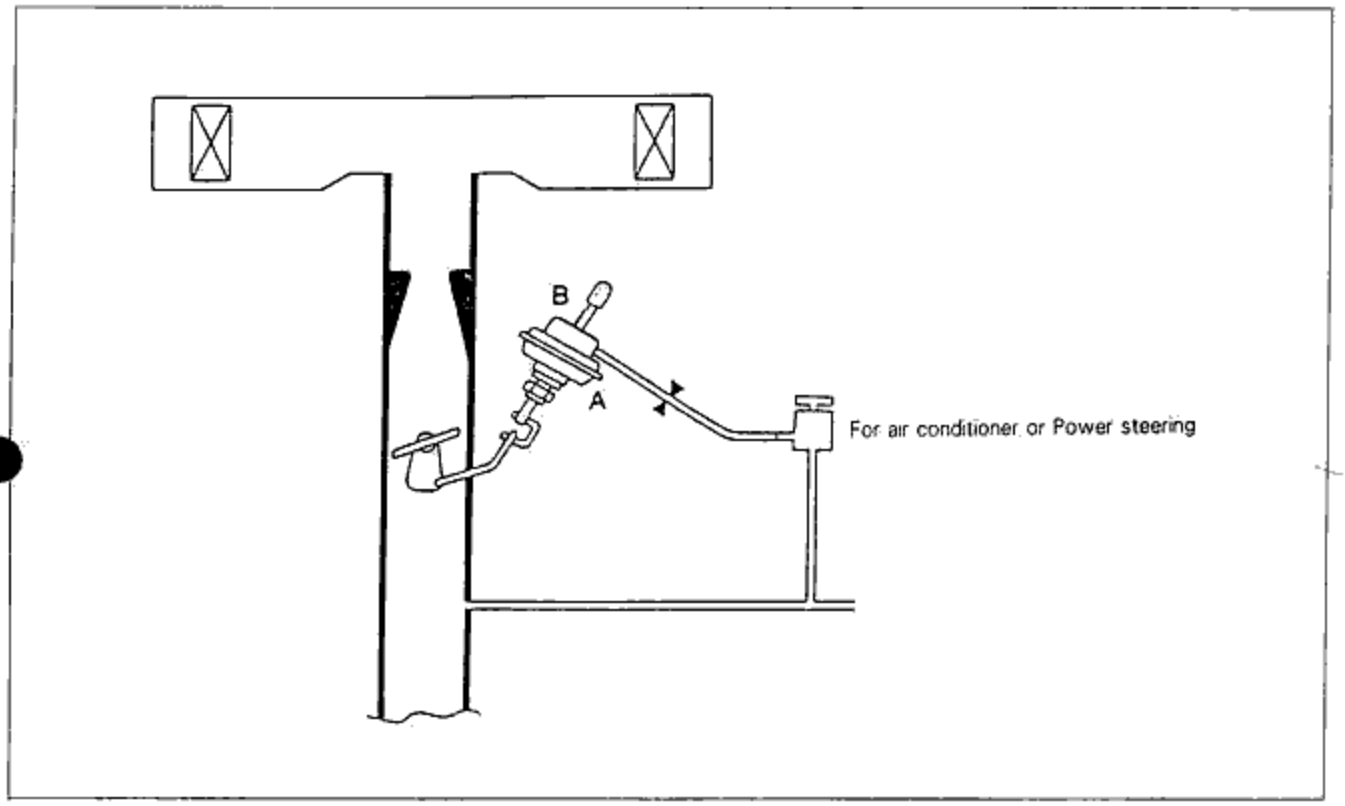

Fig. 4B-64

◆ ADJUSTMENT

1. Warm up the engine and run it at idle.
2. Connect a tachometer to the engine.
3. Remove the vacuum sensing hose from the servo-diaphragm.
4. Connect the servo-diaphragm to the intake manifold vacuum.

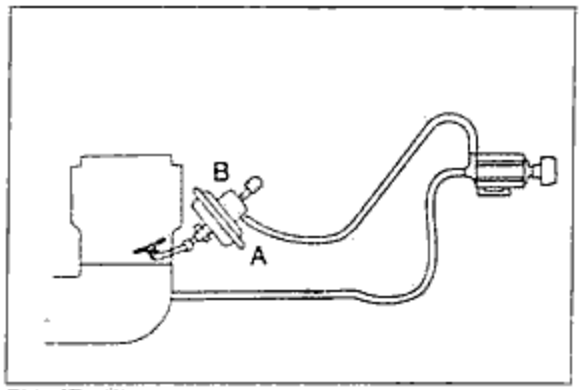

Fig. 4B-65

5. Increase the engine speed to 2,000rpm using the throttle lever and release it.
6. If the engine speed is not within standard rpm, adjust the engine speed using the adjusting-screw.

   Standard: 850~900rpm.
   (Without air conditioner)
   Standard: 1350~1400rpm.
   (With air conditioner)

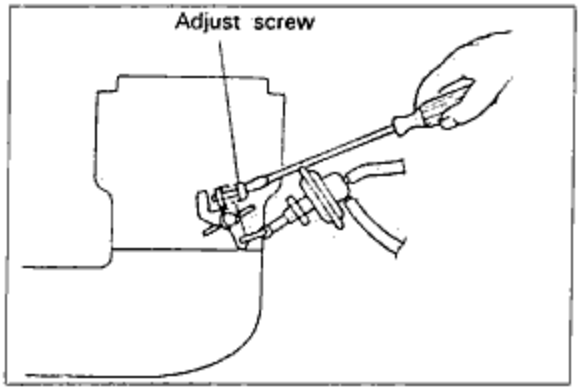

Fig. 4B-66

7. Connect a solenoid valve vacuum hose port (A) and valve.
8. Disconnect a solenoid valve vacuum hose from servo-diaphragm port(B)
9. Connect the servo-diaphragm to the intake manifold vacuum hose and then increase the engine speed to 2,000rpm using the throttle lever and release it.
10. Check the engine speed.
    Standard: 750~800rpm
11. If the engine speed is not within standard rpm, disconnect the vacuum hose and then adjust the engine speed using the adjusting screw.
12. Disconnect the blind cap from port (B) and check the engine speed after readjusting.
13. Connect the solenoid vacuum hose.

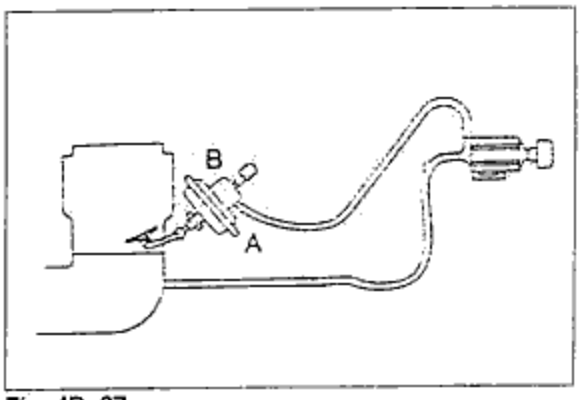

Fig. 4B-67

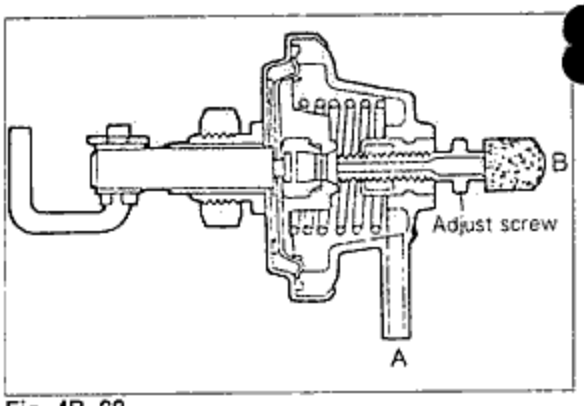

Fig. 4B-68

POSITIVE CRANKCASE VENTILATION (PCV) SYSTEM

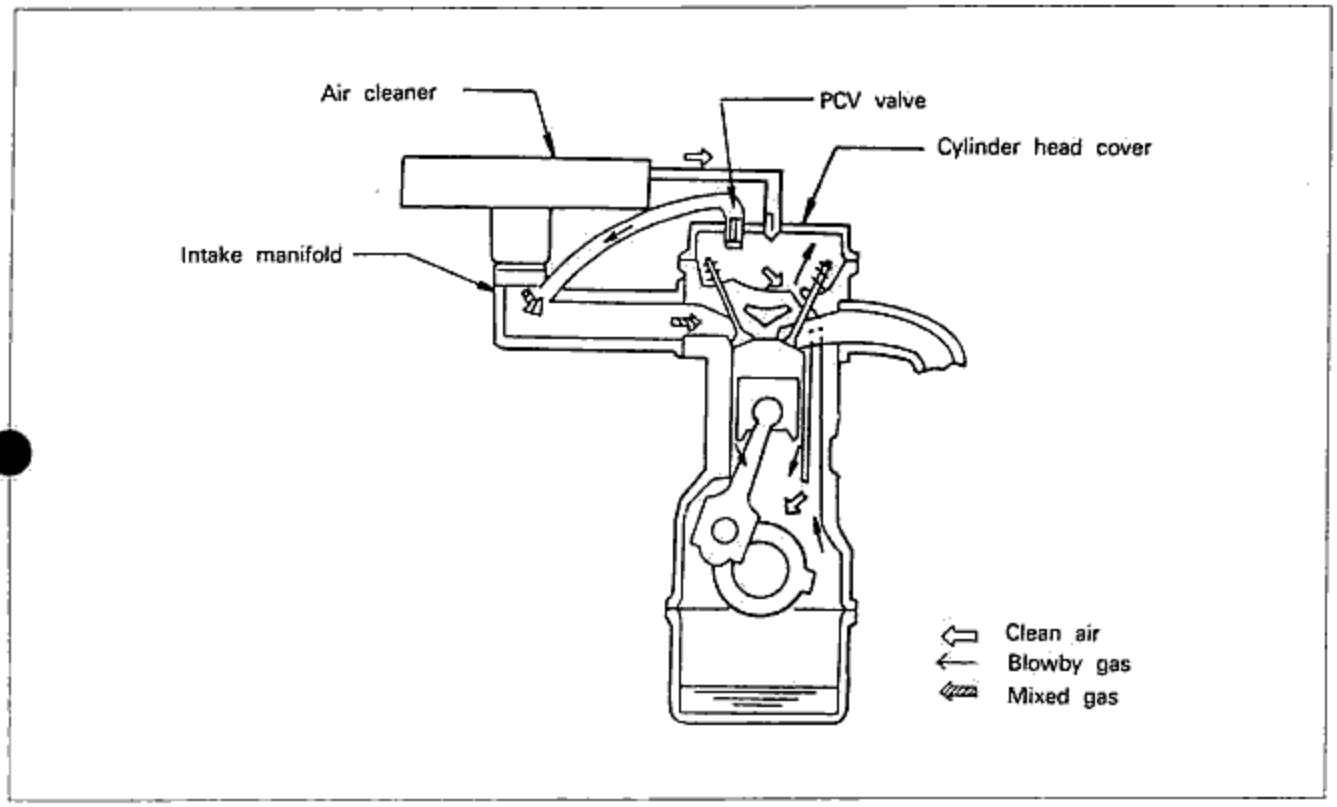

Fig. 4B-69

INSPECTION OF PCV VALVE

1. Warm up the engine and run it at idle speed.
2. Disconnect the PCV valve with the ventilation hose from the cylinder head cover.
3. Block the PCV valve opening by finger.
   If the engine speed drops, the PCV valve is working properly.

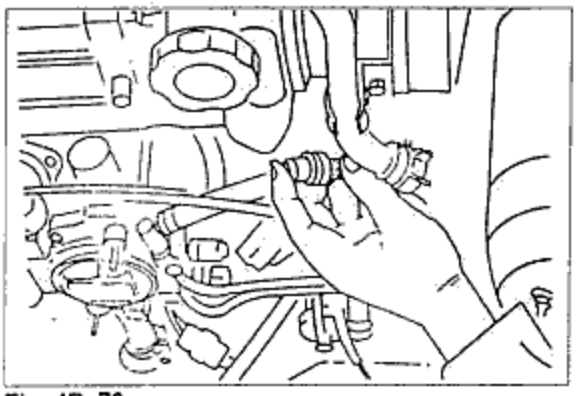

Fig. 4B-70

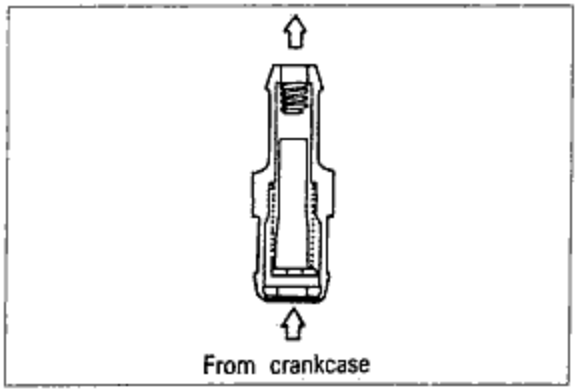

Fig. 4B-71

⊠ AIR INLET TEMPERATURE CONTROL SYSTEM

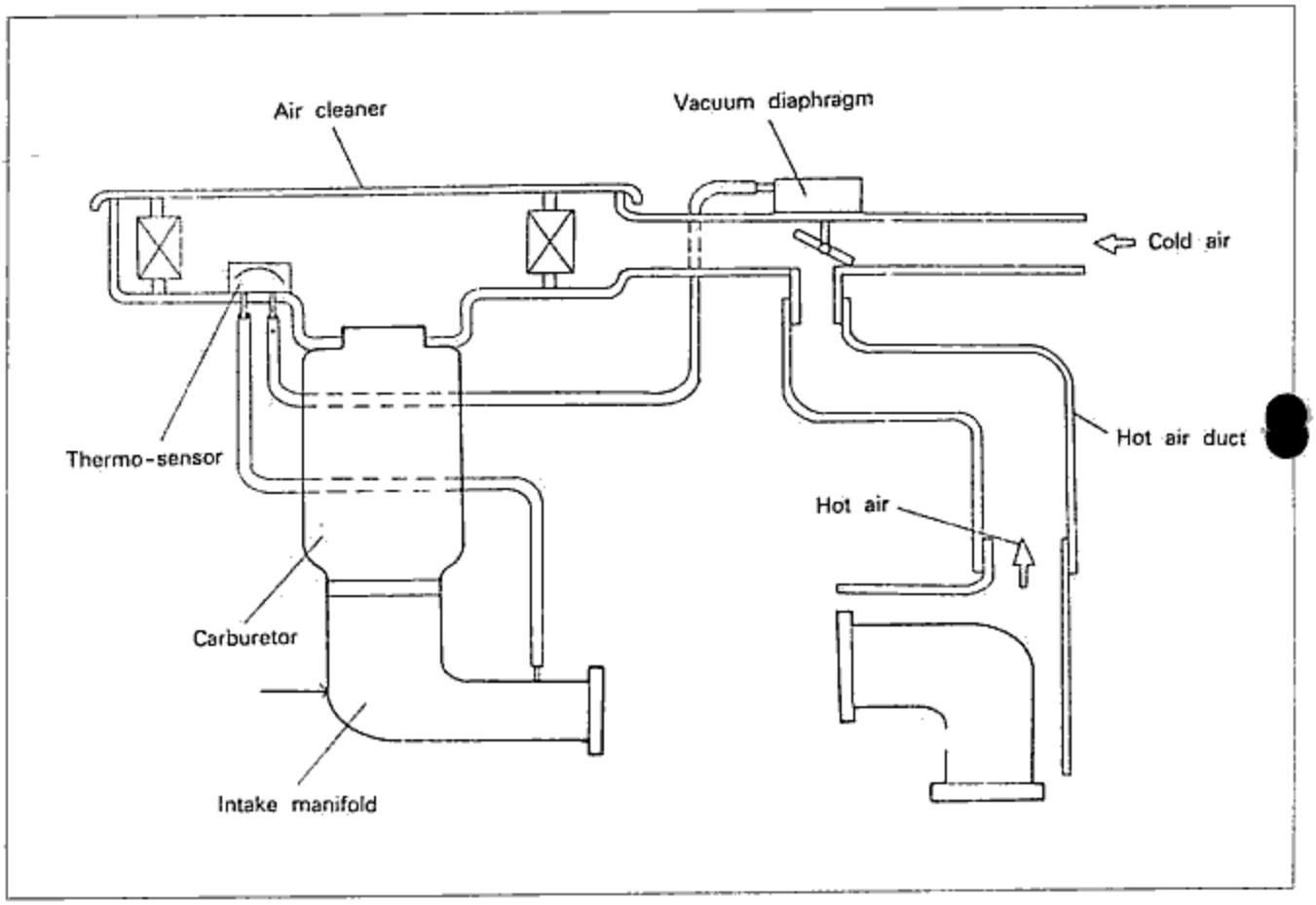

Fig. 4B-72

◆ INSPECTION

To determine whether the system is functioning properly, proceed as follows:

1. Open the hood.
2. Check the valve and linkage for sticking or wear.
3. Confirm that the valve at the fresh air side closes when the engine is cold.
4. Close the hood, and warm up the engine sufficiently.
5. Open the hood, and confirm that the valve at the fresh air side is open.

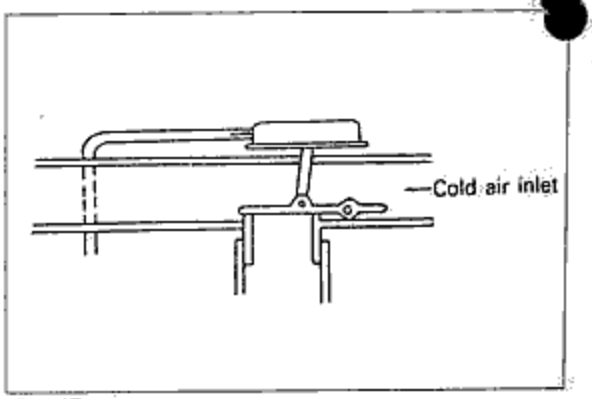

Fig. 4B-73

⊠ HOT IDLE COMPENSATION SYSTEM

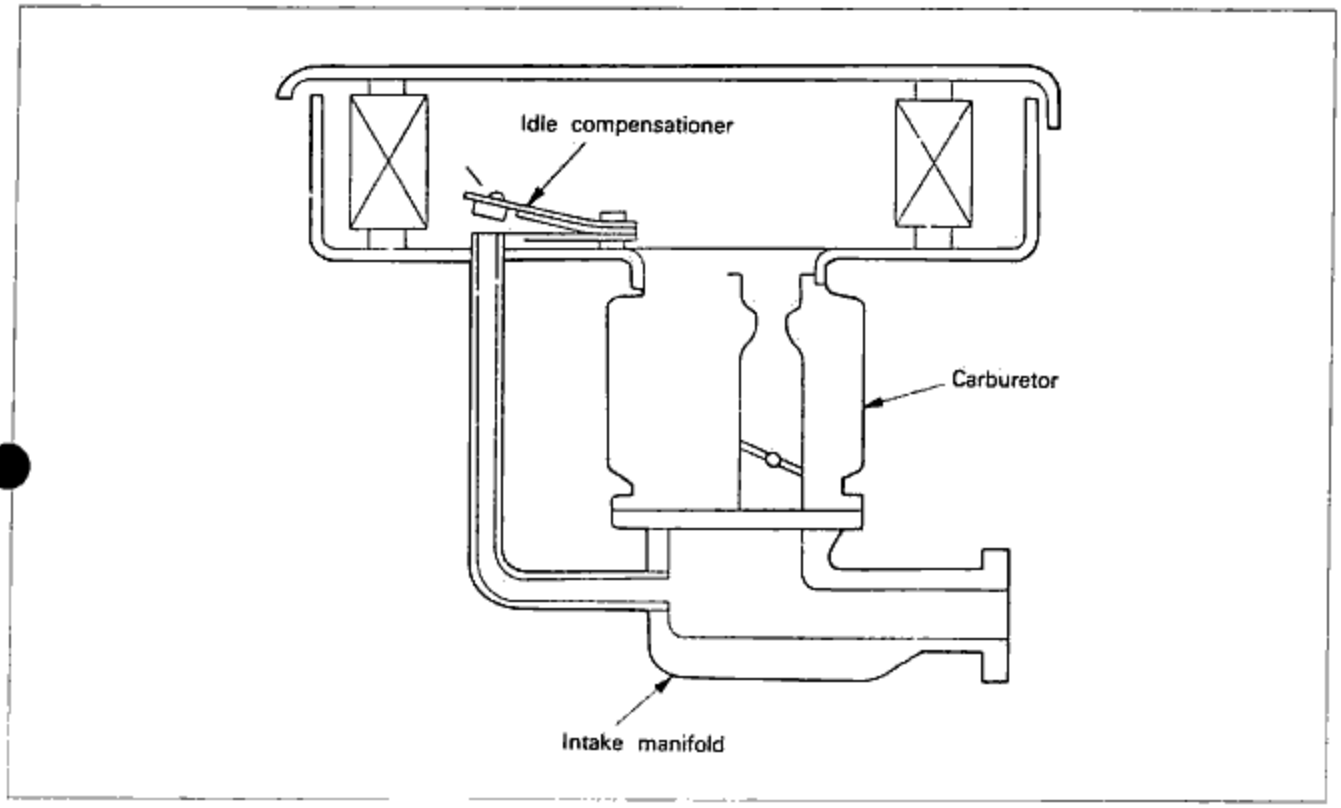

Fig. 4B-74

◈ INSPECTION

1. Check the valve is in closed position when bimetal temperature is lower than normal operating temperature.

   Opening temperature: 67 ± 4℃ (153 ± 39°F)

   To check suck air through the tube. If excessive air leakage is found, replace the idle compensator as an assembly.

2. When the bimetal temperature is heated to more than approximately 67℃ (153°F), check that valve is in open position. If the valve is not open, replace the idle compensator as an assembly.

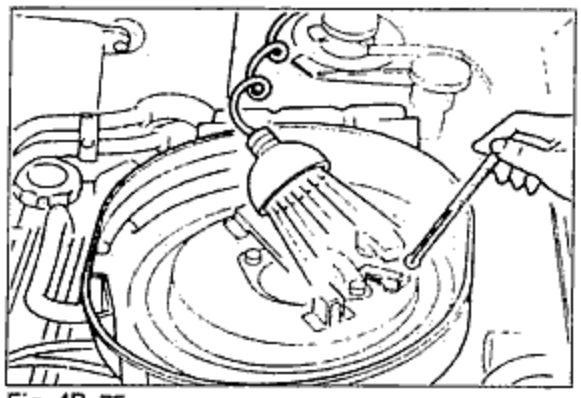

Fig. 4B-75

MEMO

ASIA ENGINE ELECTRICAL SYSTEM 5

OUTLINE ..... 5—2
- STRUCTURAL VIEW ..... 5—2

SPECIFICATIONS ..... 5—3

TROUBLESHOOTING GUIDE ..... 5—3

BATTERY ..... 5—4
- INSPECTION ..... 5—4
- QUICK RECHARGING ..... 5—5

ALTERNATOR ..... 5—5
- CHARGING SYSTEM CAUTIONS ..... 5—5
- ON-VEHICLE INSPECTION ..... 5—6
- REMOVAL ..... 5—7
- INSTALLATION ..... 5—7
- DISASSEMBLY AND ASSEMBLY ..... 5—8
- INSPECTION ..... 5—11

STARTER-A(Diesel engine : 2.0KW type) ..... 5—13
- ON-VEHICLE INSPECTION ..... 5—13
- REMOVAL AND INSTALLATION ..... 5—13
- DISASSEMBLY ..... 5—13
- INSPECTION ..... 5—16
- GREASE LUBRICATION ..... 5—19
- ASSEMBLY(MAIN POINTS) ..... 5—20

STARTER-B(Gasoline engine : 0.95KW type) ..... 5—21
- STARTING SYSTEM CIRCUIT ..... 5—21
- ON-VEHICLE INSPECTION ..... 5—21
- DISASSEMBLY AND ASSEMBLY ..... 5—22
- INSPECTION ..... 5—23

QUICK START SYSTEM(QSS) ..... 5—28

GLOW PLUG ..... 5—29
- CHECKING OPEN CIRCUIT OF GLOW PLUGS ..... 5—29
- REPLACING GLOW PLUGS ..... 5—29
- CHECKING GLOW PLUG RELAY ..... 5—29

VACUUM PUMP ..... 5—29
- CHECKING ON VEHICLE ..... 5—29
- INSPECTION ..... 5—30

DRIVE BELT ..... 5—30

SPARK PLUG ..... 5—31
- REMOVAL AND INSTALLATION ..... 5—31
- INSPECTION ..... 5—31

HIGH-TENSION LEAD ..... 5—31
- INSPECTION ..... 5—31

IGNITION COIL ..... 5—32
- INSPECTION ..... 5—32

DISTRIBUTOR ..... 5—32
- INSPECTION ..... 5—32
- INSTALLATION ..... 5—35
- DISASSEMBLY AND ASSEMBLY ..... 5—35

OUTLINE

STRUCTURAL VIEW

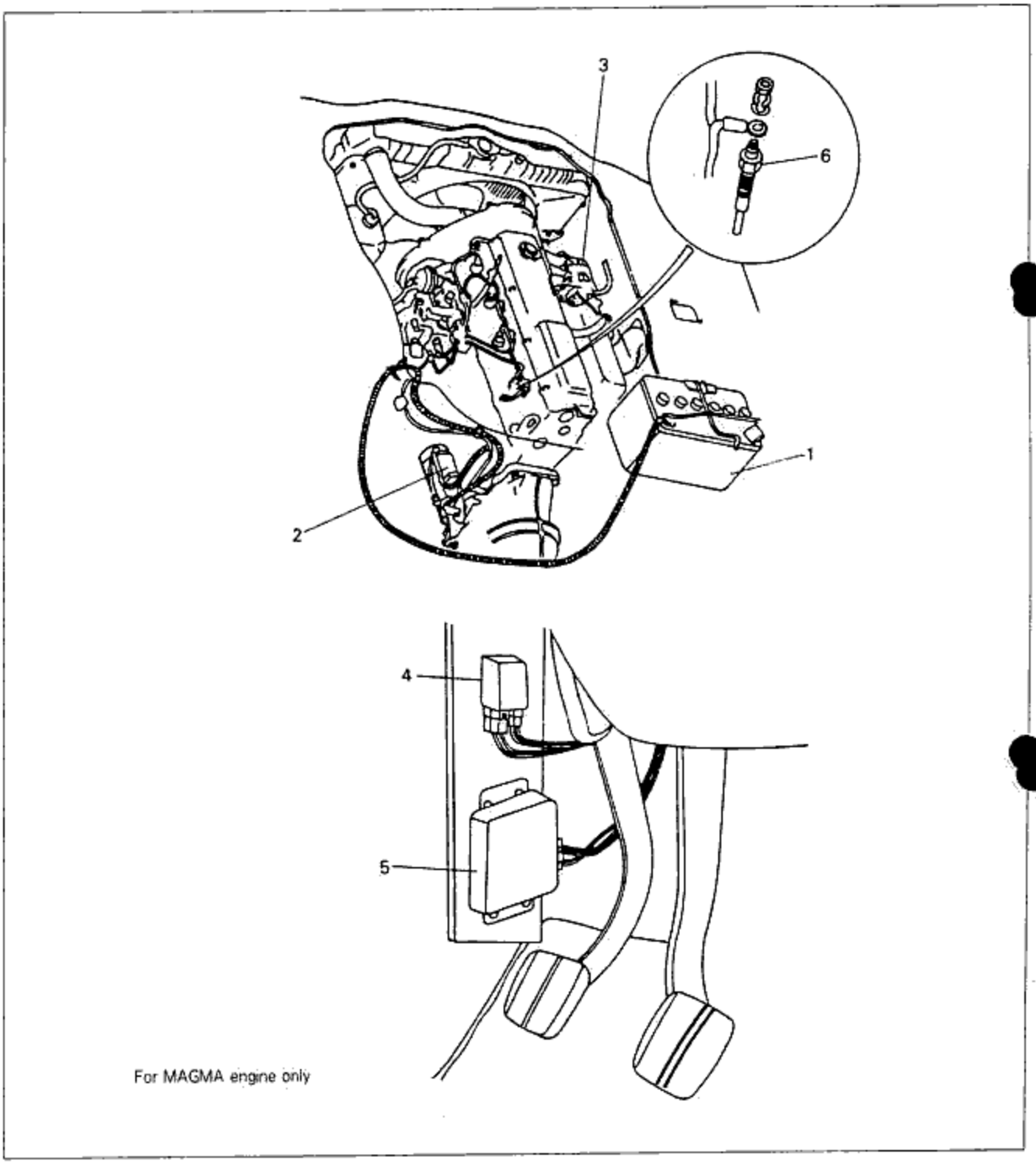

Fig. 5-1

1. Battery
2. Starter
3. Alternator
4. Glow plug relay
5. Q.S.S.(Quick Start System)
6. Glow plug

SPECIFICATIONS

Items \ Engine type		MAGMA	JF8 F/B
Voltage		12V, negative ground	
Battery	Type and capacity(20–hour rate)	MF85, 85AH	MF 60, 60AH
Alternator	Type	Alternating	
	Output	12V–55A	
	Regulator type	Transistorized (built-in IC regulator)	
Starter	Type	Electromagnetic push-in-type	
	Output	2.0kw	12V–0.9KW
Glow plug	Type	Sheathed type	–
	Voltage	10.5V	–
	Amperage	16.5	–
Ignition coil	Output	–	12V
Spark plug	Type	–	BP5ES
	Plug gap	–	0.75~0.85mm (0.029~0.033in)
	Firing order	–	1–3–4–2
Distributor	Breaker type	–	Contactless(igniter)

TROUBLESHOOTING GUIDE

Problem	Possible cause	Correction
Starter does not turn at all, or its turning speed is too slow to start the engine.	**Battery and related parts**	
	• Poor contact of battery terminals	• Clean and tighten
	• Poor grounding of negative cable	• Clean and repair
	• Voltage drop caused by discharged battery	• Recharge
	• Insufficient voltage caused by battery malfunction	• Replace
	Magnetic switch and related parts	
	• Loosened wiring or connectors or both	• Repair
	• Burnt magnetic switch contact plate or improper contact	• Replace
	• Broken wire in magnetic switch pull-in coil	• Replace
	• Broken wire in magnetic switch holding coil	• Replace
	Starter and related parts	
	• Poor contact of brushes	• Adjust contact or replace
	• Fatigued brush spring	• Replace
	• Poor grounding of field coil	• Replace
	• Poor soldering of field coil	• Repair
	• Commutator malfunction	• Repair
	• Grounded armature	• Replace
	• Worn parts	• Replace
Starting problem	• Insufficient battery capacity	• Recharge
	• Malfunction of QSS(Quick Start System)	• Inspect or replace

Problem	Possible cause	Correction
Starter turns but pinion gear does not mesh with ring gear	• Tip of overrunning clutch pinion is worn • Fatigued overrunning clutch drive spring • Overrunning clutch races • Improper sliding of spline • Worn bushing • Worn ring gear	• Replace • Replace • Replace • Adjust contact and repair • Replace • Replace
Starter turns continuously(does not stop)	• Sticking contact place of magnetic switch • Layer shorting of coil of magnetic switch	• Replace • Replace
Misfiring of motor Discharging of battery	• Malfunction of wiring, or poor wiring contact • Loosened drive belt • Grounded or broken stater coil • Broken rotor coil • Poor contact of brush and slip ring • Malfunction of rectifier • Malfunction of IC regulator • Insufficient or unsuitable battery electrolyte • Malfunction of battery electrode (internal short-circuit) • Poor contact of battery terminals • Excessive electric load	• Replace • Adjust • Replace • Replace • Clean or replace • Replace • Replace • Adjust • Replace • Clean and tighten • Check power consumption
Overcharging of battery	• Malfunction of IC regulator • Operating in extremely high temperature	• Replace • Repair

BATTERY

INSPECTION

1. Check for corrosion on the terminals, or loosened cable connection.
2. Check the electrolytic level.
   There is sufficient electrolyte if the level is between the "UPPER LEVEL" and "LOWER LEVEL" marks. If the level is too low, add distilled water up to the "UPPER LEVEL" mark.
3. Check the specific gravity.
   Measure the specific gravity by using a hydrometer. If the specific gravity reading is 1.200 or less, recharge the battery.
   Standard: 1.280(at 25℃ (77°F))

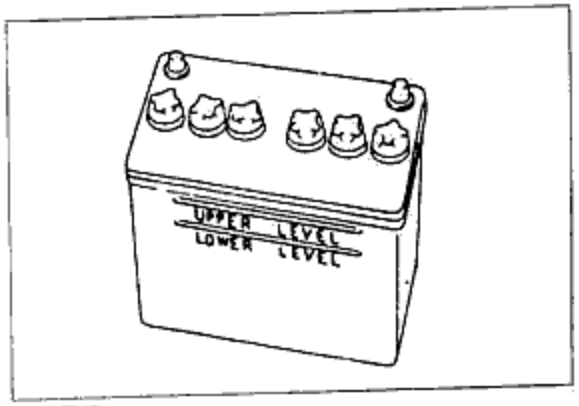

Fig. 5-2

Relation of specific gravity to recharging(at solution temp. of 20℃(68°F)

Electrolyte spec. grav.	Recharging(%)
1.260	100
1.210	75
1.160	50
1.110	25
1.060	Almost no capacity

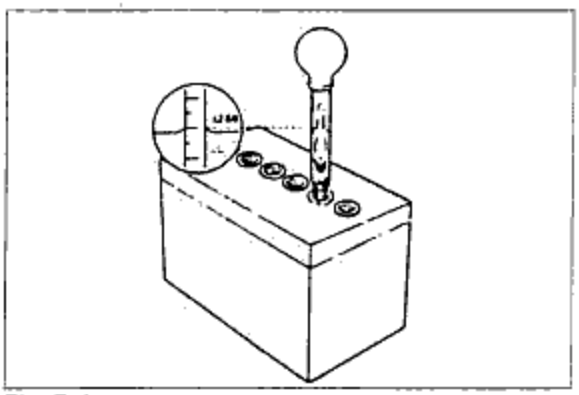

Fig. 5-3

QUICK RECHARGING

After dismounting the battery from the vehicle, disconnect the vent plug and recharge the battery.

Caution

(a) Stop the engine by turning switch OFF before checking or recharging of the battery.

(b) When disconnecting the battery cables, disconnect the negative(—) cable first. When connecting the battery cables, connect the positive(+) cable first.

(c) Recharge the battery in a water case to prevent overheating while quick recharging.

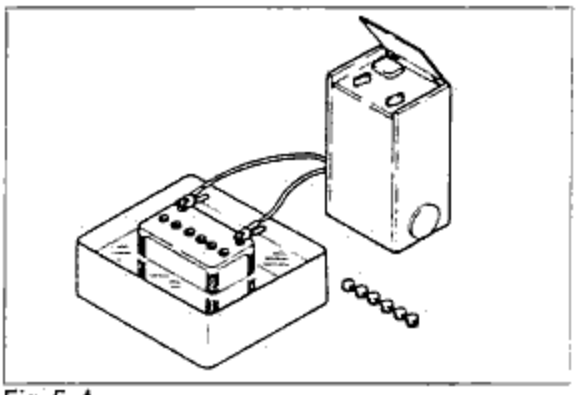

Fig. 5-4

ALTERNATOR

CHARGING SYSTEM CAUTIONS

1. Be sure battery connections are not reversed, because this will damage the rectifier.
2. Do not use high-voltage testers, such as a megger, because they will damage the rectifier.
3. Remember that battery voltage is always applied to the alternator's "B" terminal.
4. Do not ground the "L" terminal while the engine is running.
5. Do not start the engine while the coupler is disconnected from the "L" and "R" terminals.

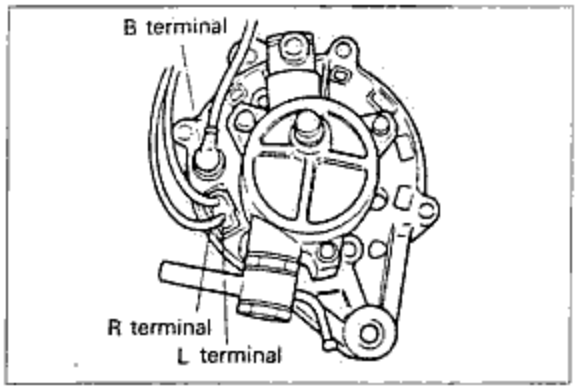

Fig. 5-5

◆ ON-VEHICLE INSPECTION

INSPECTION OF CHARGING SYSTEM

1. Make current and voltage connections as shown in the figure.
2. Turn the ignition switch OFF.
3. Read the voltage between the "L" terminal and ground. The alternator is bad if the reading is 0V.
4. Turn the ignition switch ON and read the voltmeter. If the reading is 0V, there is a malfunction of the alternator or wiring.
   If the voltage is near the battery voltage, short circuit the F terminal and the alternator rear bracket, and then read the voltmeter. If the voltage is lower than the battery voltage, there is a malfunction of the IC regulator.

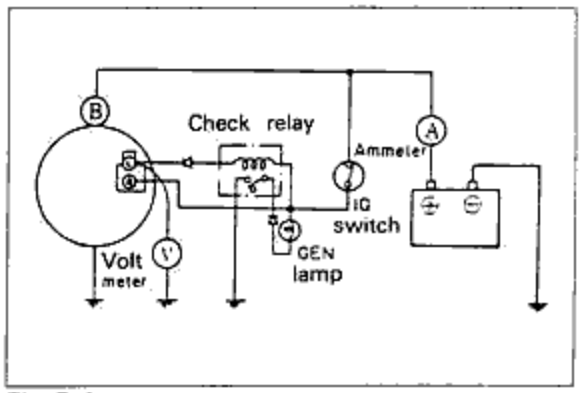

Fig. 5-6

CHECKING NO-LOAD ADJUSTMENT VOLTAGE

1. Check to be sure that the battery is fully charged.
2. Connect an ammeter and a voltmeter as shown in the figure.
3. Turn the ignition key to ON, and then check to be sure that the voltmeter reading is significantly lower than the battery voltage(1~3V).
   If the voltmeter reading is the same as the battery voltage, there may be a malfunction in the alternator.
4. Short circuit the terminals of the ammeter, and then start the engine. After starting, discontinue the short circuiting.

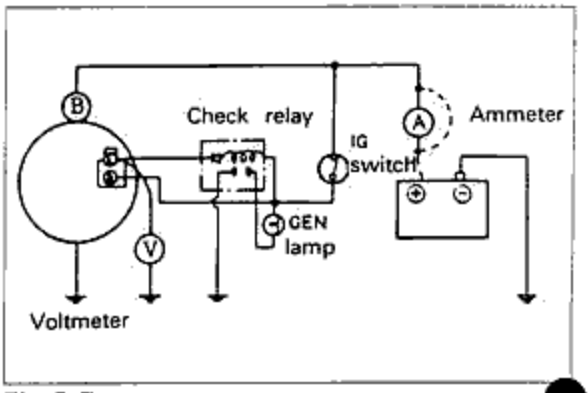

Fig. 5-7

NOTE

Be careful, when starting the motor, that the current of the starter doesn't flow to the ammeter.

5. Under no-load conditions, increase the alternator speed to 5,000 rpm(engine speed of 2,000~2,500 rpm).
6. Read the indication shown by the voltmeter and the ammeter.
   Ammeter:5A or less
   Voltmeter (adjustment voltage):
   14.7±0.3V(at 20℃ (68°F))

CHECKING OUTPUT

1. Disconnect the negative battery cable.
2. Connect an ammeter and a voltmeter as shown in the figure.
3. Connect the negative battery cable.
4. Start the engine.
5. Apply a load by turning on the head lights.
6. Gradually increase the engine speed, and read the output current.
   If the voltage is higher than the battery voltage and there is an output current, there is no problem.

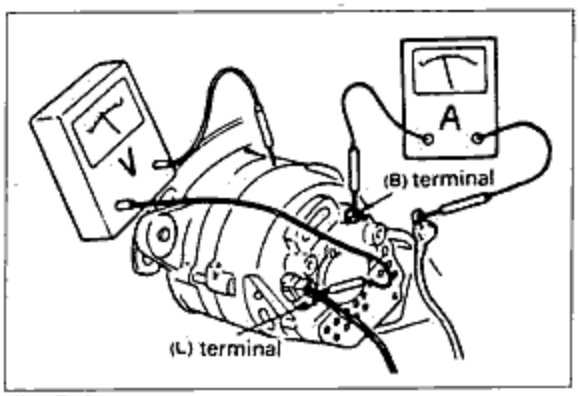

Fig. 5-8

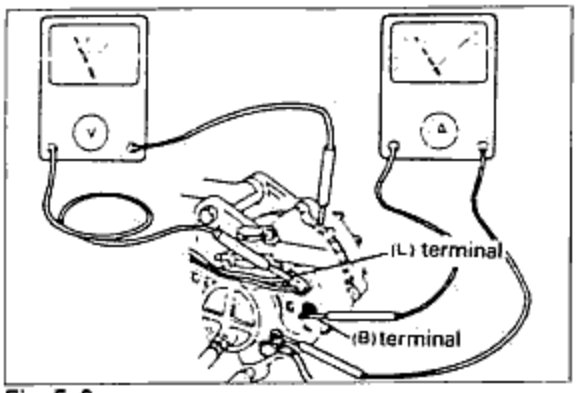

Fig. 5-9

◈ REMOVAL

1. Lift the hood.
2. Disconnect the negative battery cable.
3. Remove the drive belt.
4. Disconnect the wire from the "B" terminal of the alternator and connector from the "L" and "R" terminals, and disconnect the wire harness from the clip.
5. Disconnect the vacuum hose and oil hose.
6. Remove the drive belt.
7. Remove the bolt & nut and the alternator.

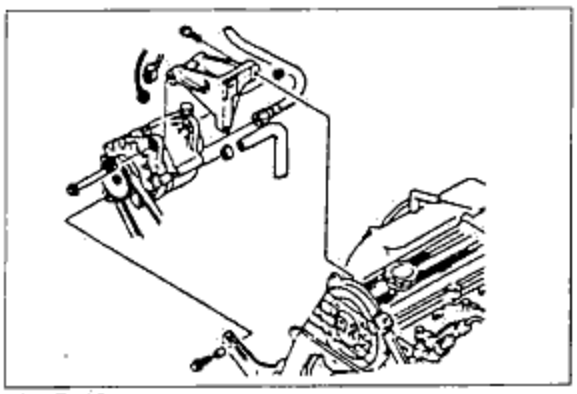
Fig. 5-10

◈ INSTALLATION

Installation is the reverse order of removal. Note the following points.

1. Install the drive belt so that the V belt fits into the grooves of each pulley.
2. Adjust the drive belt tension.
   (Refer to the drive belt section).

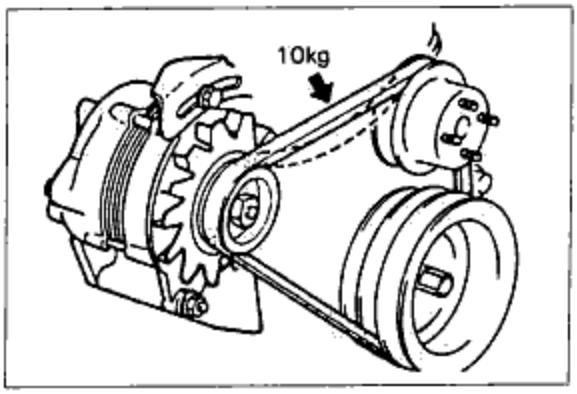

Fig. 5-11

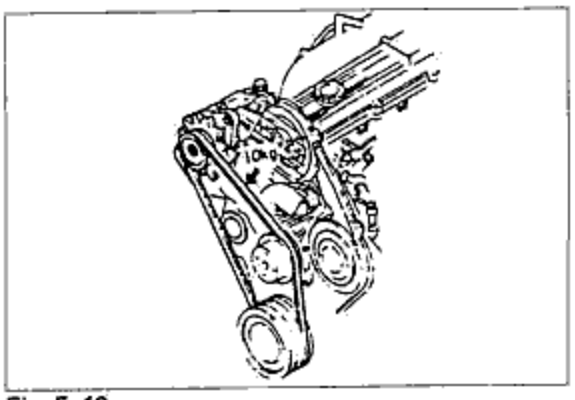

Fig. 5-12

◆ DISASSEMBLY AND ASSEMBLY

Disassemble in the numbered order shown in the figure. Assembly is the reverse order of disasembly.

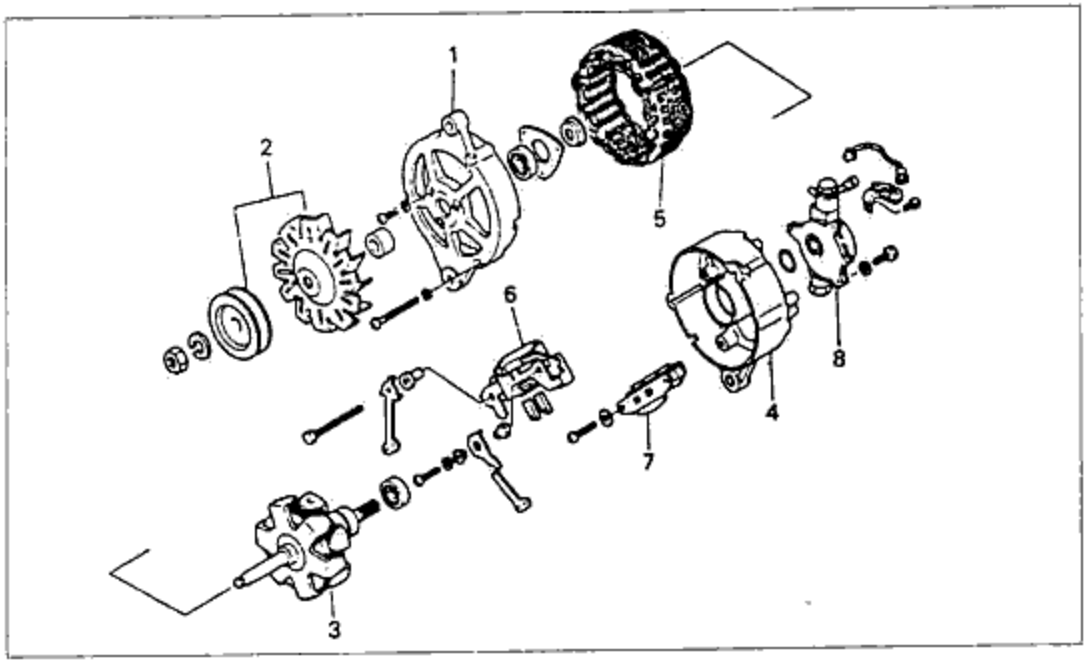

1. Front bracket
2. Fan and pulley
3. Rotor
4. Rear bracket
5. Stator coil
6. Brush holder
7. Rectifier
8. Vacuum pump

Fig. 5-13

VACUUM PUMP

Loosen the attaching bolts and remove the vacuum pump.

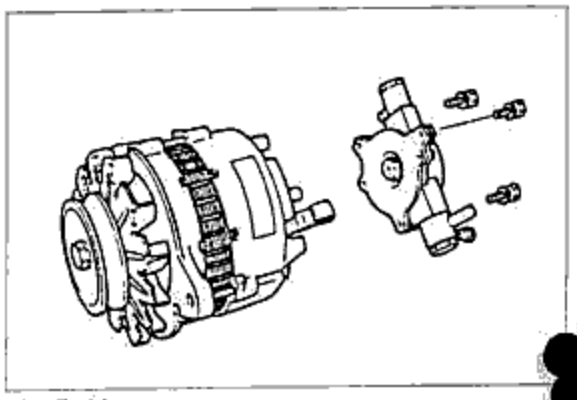

Fig. 5-14

FRONT BRACKET AND ROTOR

Fit a flat-tipped (−) screwdriver between the front bracket and the stator core, and then separate the stator and rotor by tapping the screwdriver with a rubber hammer.

Caution:

Be careful not to force the screwdriver too far in, because the coil may become scratched.

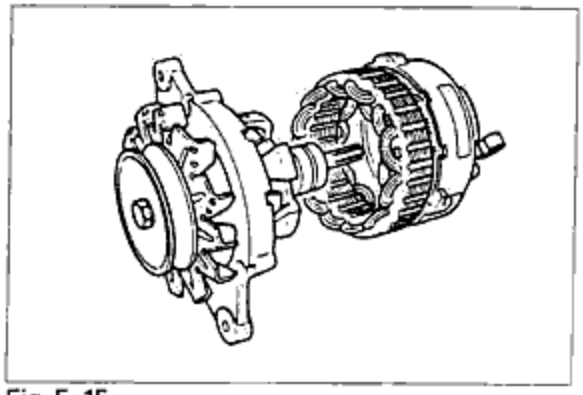

Fig. 5-15

LOCK NUT

Secure the rotor in a vise, and loosen the pully nut.

Caution:

Install the protection material(copper plate or rag) to the vise.

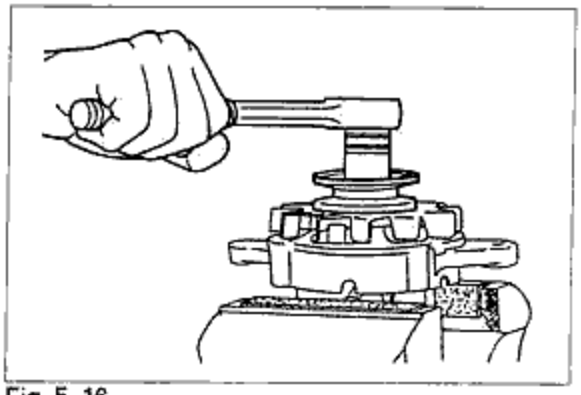

Fig. 5-16

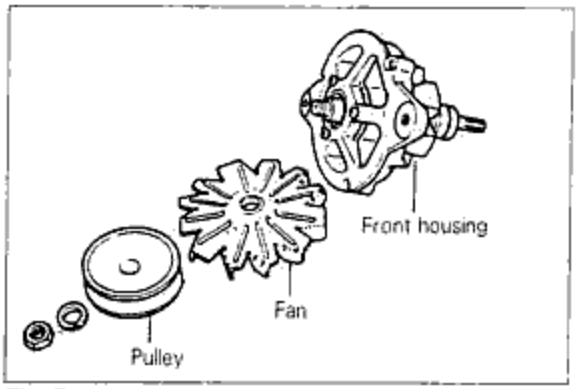

Fig. 5-17

STATOR

Use a soldering iron to disconnect the stator lead wiring.

Caution:

Do the disconnecting quickly, using the soldering iron no more than about 5 seconds, because the rectifier may become damaged if the inside is overheated.

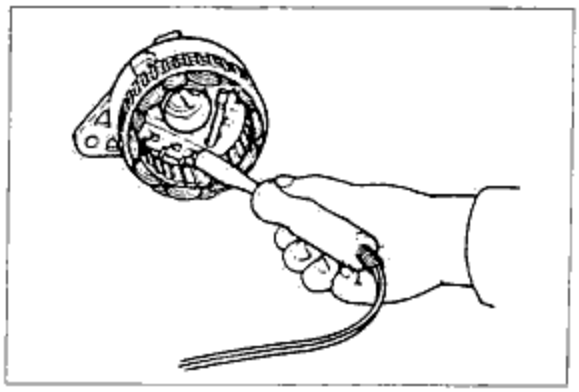

Fig. 5-18

BRUSH HOLDER AND IC REGULATOR ASSEMBLY

Use a soldering iron to disconnect the brush holder and IC regulator assembly from the rectifier.

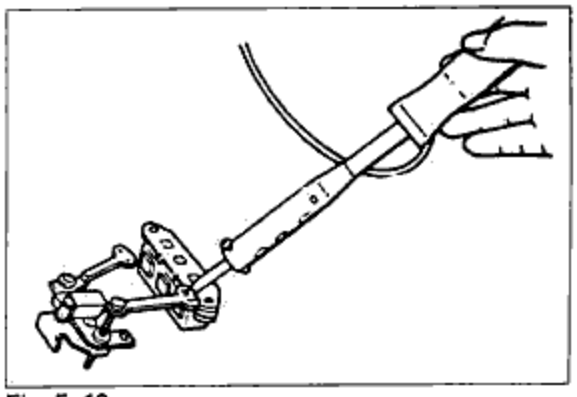

Fig. 5-19

BRUSHES

When the rotor is to be attached to the rear bracket, insert a wire through the hole in the rear bracket so that the brushes are at the specified position.

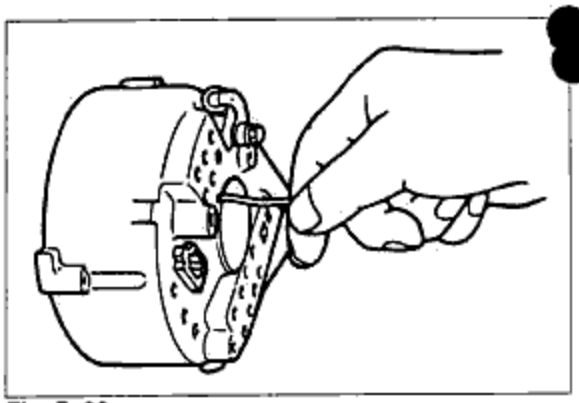

Fig. 5-20

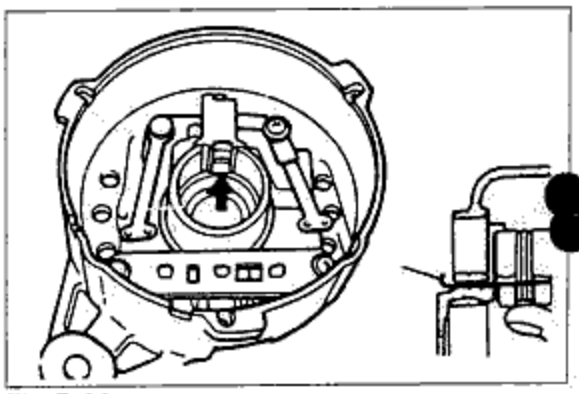

Fig. 5-21

SEAL WASHERS

Insert a seal washer at each end of the front bracket.

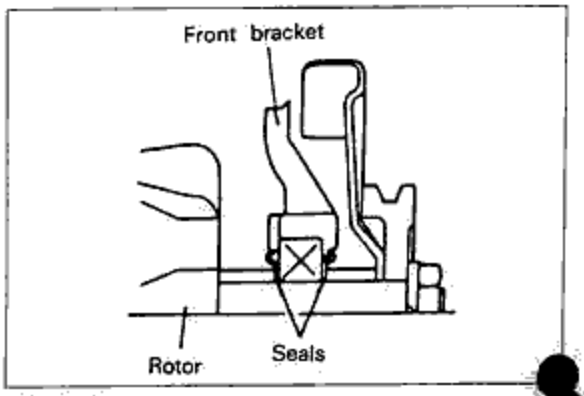

Fig. 5-22

◆ INSPECTION

Inspect the following parts, and repair or replace if a problem is found.

STATOR

1. Use a circuit tester to check for continuity between the core and each lead wire.
   No-continuity is the normal condition.

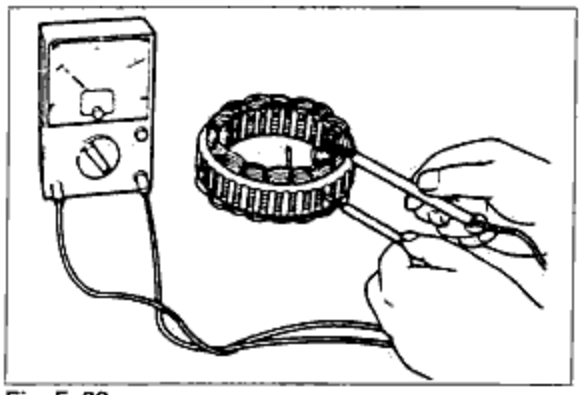

Fig. 5-23

2. Use a circuit tester to check for continuity between lead wires.
   Continuity is the normal condition.

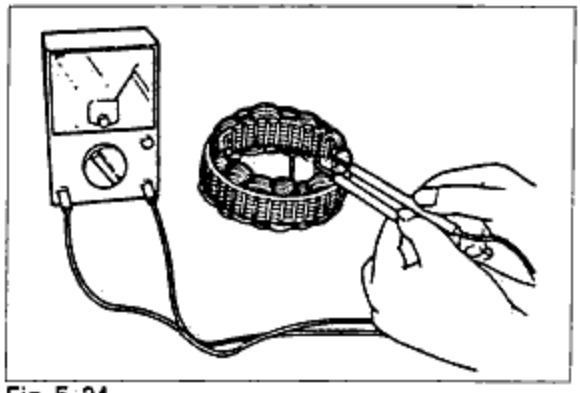

Fig. 5-24

ROTOR

1. Use a circuit tester to check for continuity between the core and each slip ring.
   No-continuity is the normal condition.

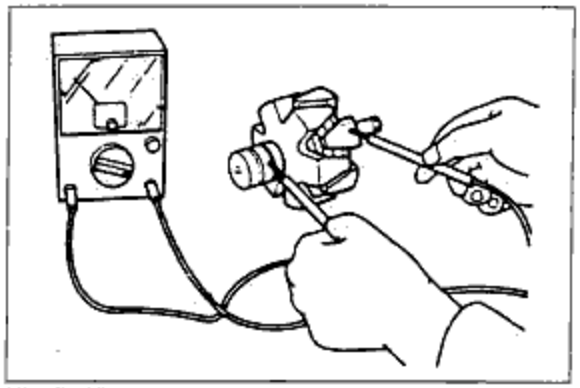

Fig. 5-25

2. Use an ohmmeter to check the resistance between each slip ring.
   The resistance should be 3~4 ohms.

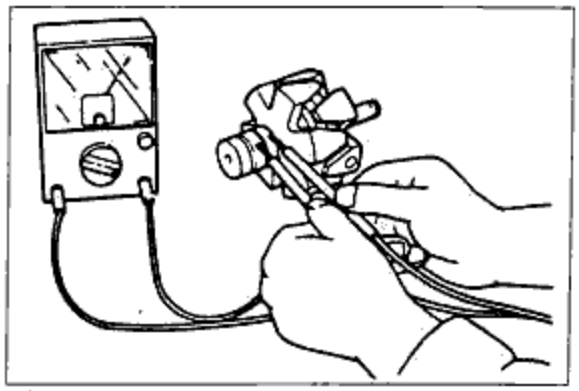

Fig. 5-26

RECTIFIERS

Use a continuity tester to check the continuity of each rectifier.
There should be high resistance in one direction and low resistance in the other direction.
There is a short-circuit if the resistance is low in both directions, and there is a broken wire if the resistance is high in both directions. In either instance, replace the rectifier.

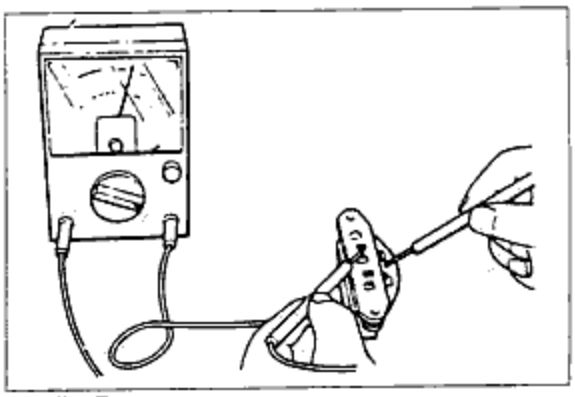

Fig. 5-27

BRUSHES AND SPRING

1. Check the force of the brush spring.
   Measure the force of the brush spring by using a spring pressure gauge, and push the brush into the brush holder until the tip projects 2mm(0.079in)
   Limit: Less than 210g(7.4 oz)
2. Check for burnt or worn brushes.
   Limit: 6.5mm(0.256in)

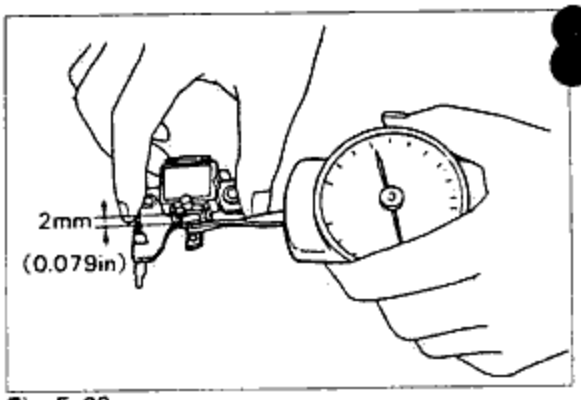

Fig. 5-28

BEARINGS

Check the front and rear bearings for improper rotation and/or abnormal noise.
Replace if an abnormal condition is discovered.

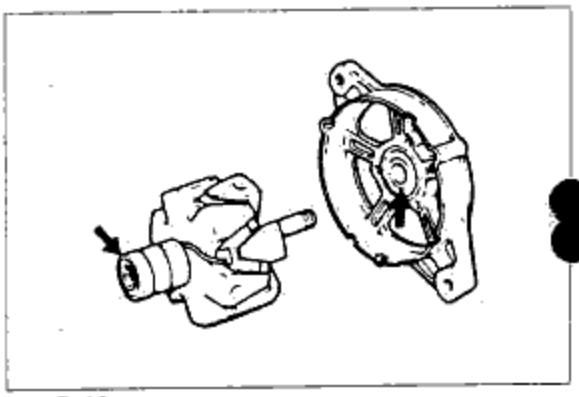

Fig. 5-29

STARTER-A(Diesel engine : 2.0KW type)

ON-VEHICLE INSPECTION

1. Directly connect the "B" and "M" terminals of the starter by using a lead wire.
2. The starter is functioning properly if it turns smoothly, without abnormal noise.
3. If starting is slow, if the starter doesn't turn, or if abnormal noise is heard, remove the starter and check it, but be sure to check the following matters before removing it.
   (1) Charging condition of battery.
   (2) Looseness or corrosion of battery terminal
   (3) Condition of wiring
   (4) Condition of ignition switch
   (5) Locked engine

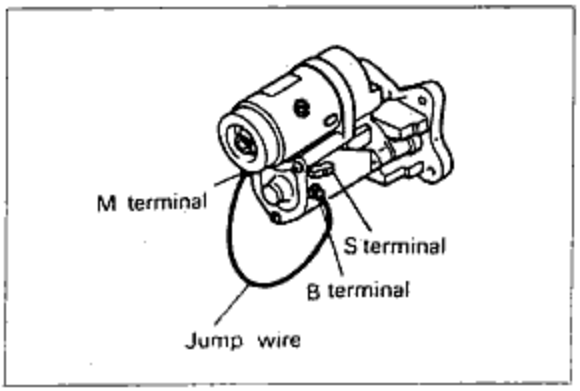

Fig. 5-30

Warning:
Be specially careful, when the starter is operated, the engine may start.

REMOVAL AND INSTALLATION

Removal is as follows:
1. Lift the hood.
2. Disconnect the negative battery cable.
3. Jack up the vehicle, support it on safety stands.
4. Disconnect the wiring from the starter.
5. Remove the starter.
   Installation is the reverse order of removal.

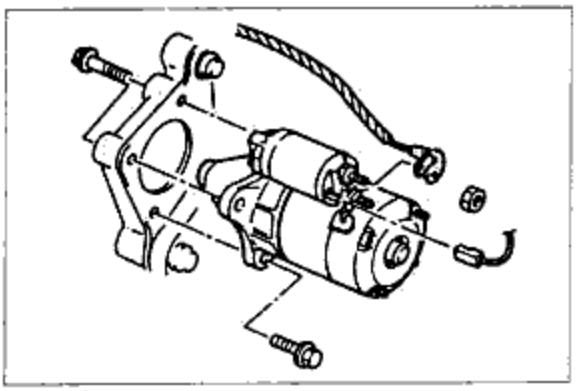
Fig. 5-31

DISASSEMBLY

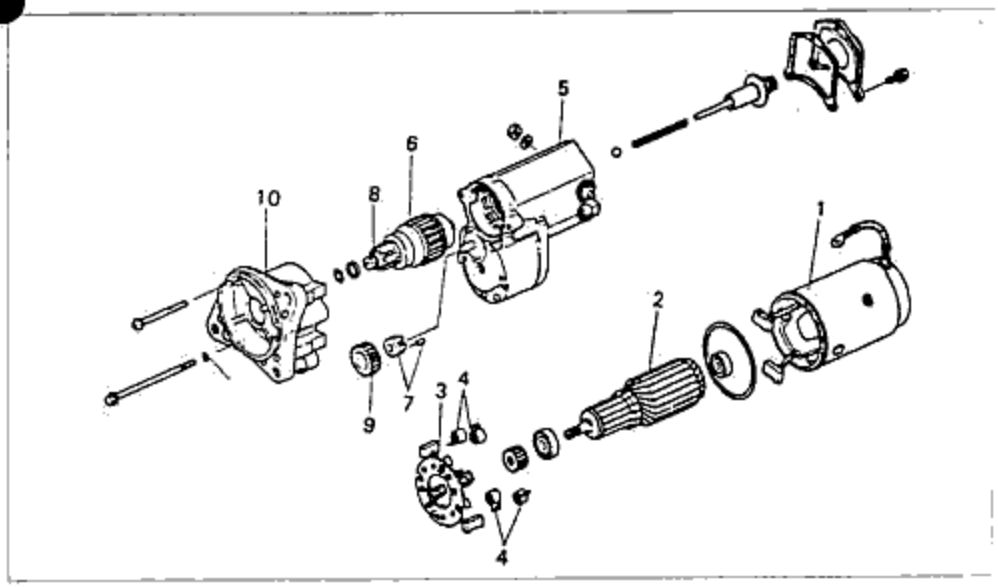

1. Field frame Ass'y
2. Armature
3. Brush holder
4. Brush spring
5. Magnetic switch Ass'y
6. Clutch Ass'y
7. Retainer & rollers
8. Pinion gear
9. Idler gear
10. Starter housing

Fig. 5-32

1. Remove the lead wire connected to the magnet switch.

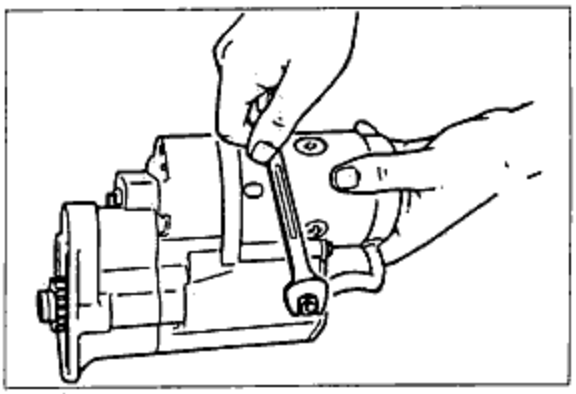

Fig. 5-33

2. Remove the two through-bolts.

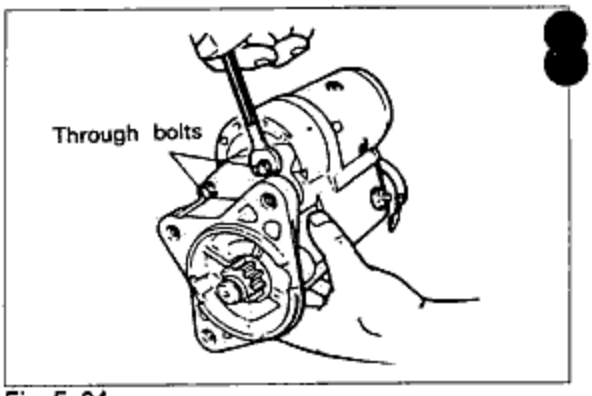

Fig. 5-34

3. Remvoe the yoke from the magnet switch.

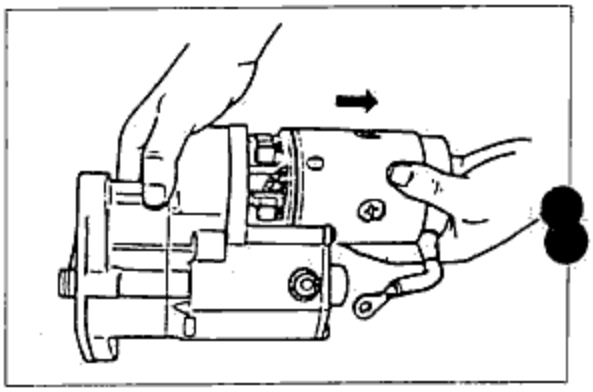

Fig. 5-35

4. Using radio pliers or a similar tool, raise the (+) side brush spring and remove the brush.

Caution:

Be careful not to scratch the brush or commutator.

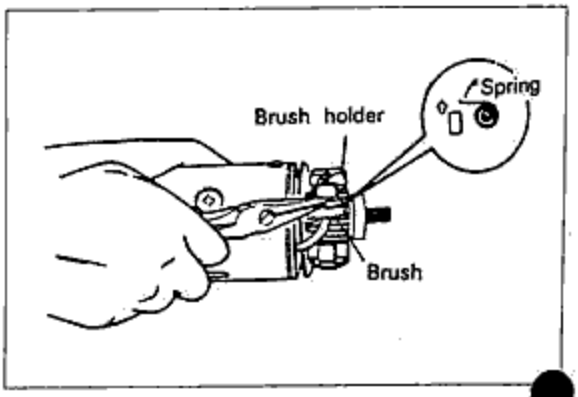

Fig. 5-36

5. Remove the armature from the yoke.

Caution:
Be careful not to drop the armature.

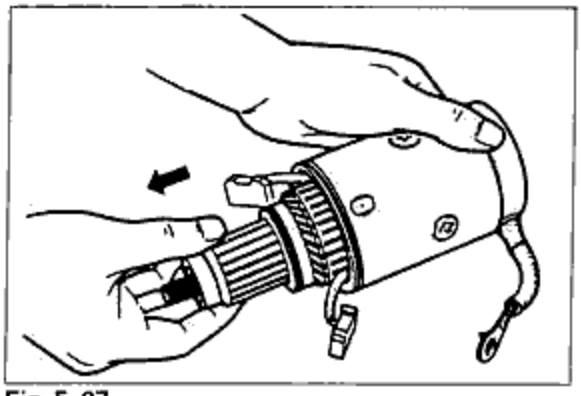

Fig. 5-37

6. Remove the two screw which hold the housing and the magnet switch.

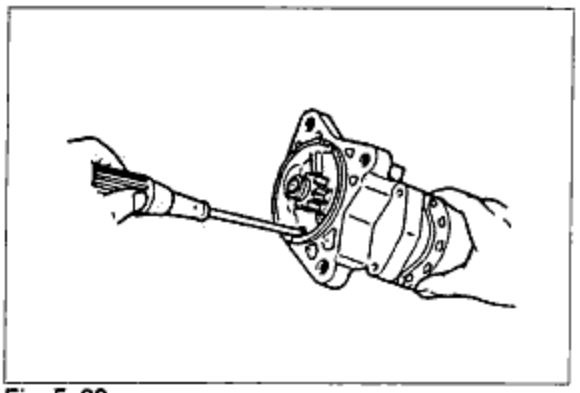

Fig. 5-38

7. Remove the housing from the magnet switch.

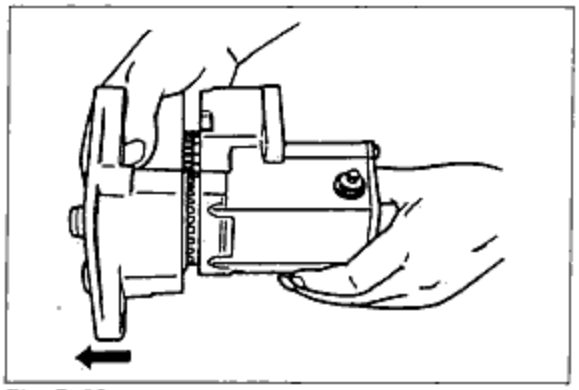

Fig. 5-39

8. Remove the idle gear, retainer and roller.

Caution:
Be careful not to lose the roller.

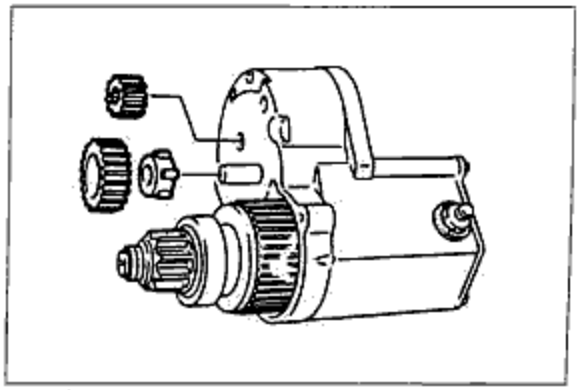

Fig. 5-40

9. Remove the clutch from the housing.

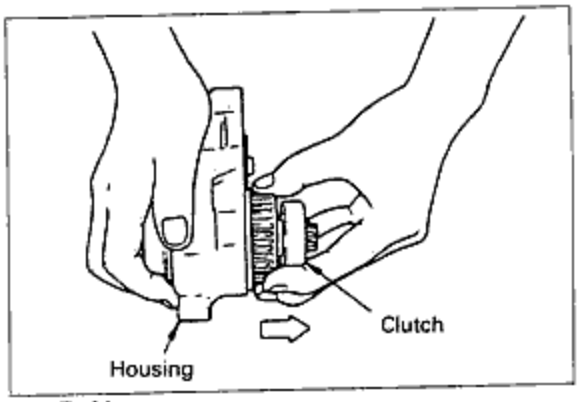

Fig. 5-41

10. Remove the steel ball from the clutch.

Caution:
Be careful not to lose the steel ball.

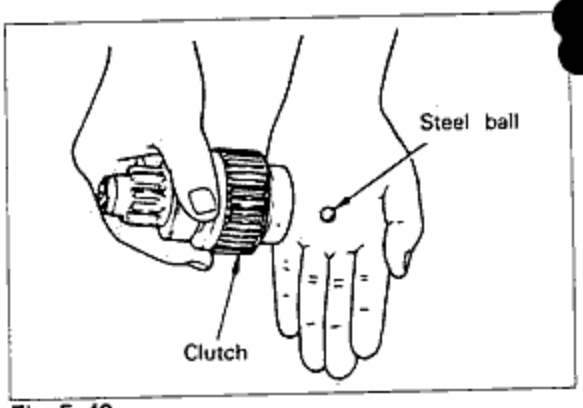

Fig. 5-42

11. Remove the coil spring from the magnet switch.

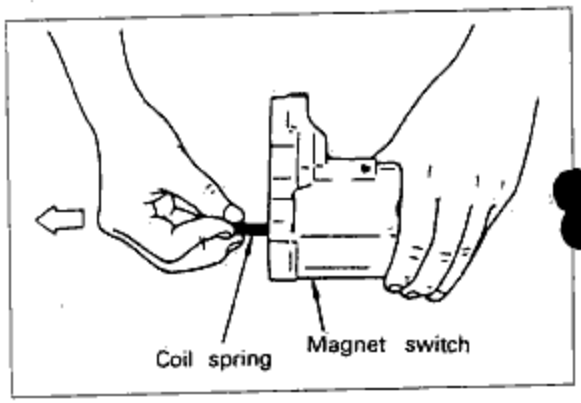

Fig. 5-43

◆ INSPECTION

Checking the grounding of the armature coil
Check for continuity between the commutator and the core by using a circuit tester. Replace the amature if there is continuity.

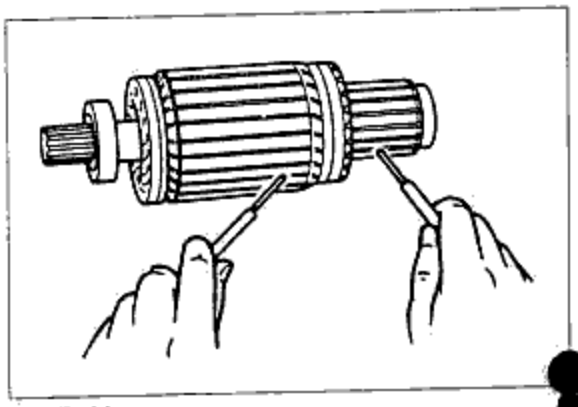

Fig. 5-44

CHECKING THE ELLIPTICAL DEGREE OF THE COMMUTATOR

As shown in the figure, use a dial gauge for checking.

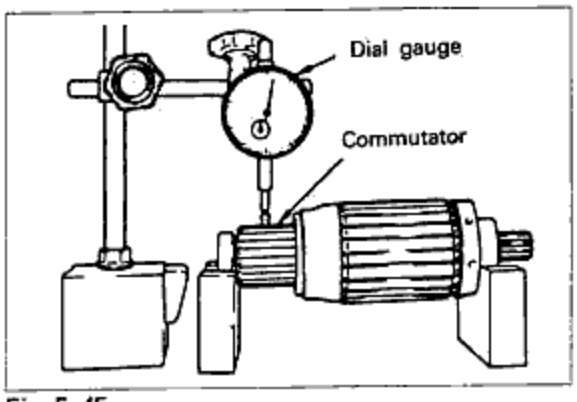

Fig. 5-45

ELLIPTICAL DEGREE

If the difference between the maximum diameter and the minimum diameter is 0.4mm(0.016in) or more, adjust so that it is 0.05mm(0.002in) or less

Caution:

If the elliptical degree is great, also check for bending of the shaft.

Use fine(#300 or higher) sandpaper to polish away roughness of the commutator surface. If it is badly burned, repair by using a lathe.

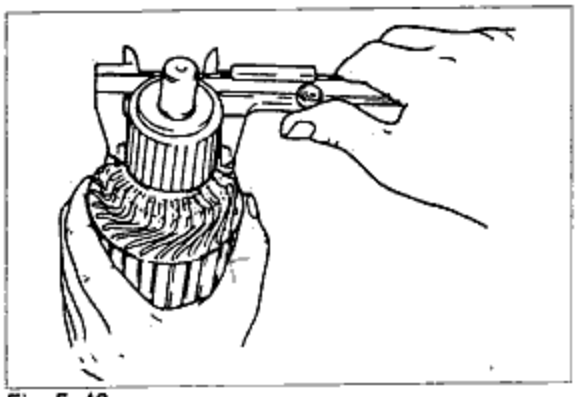
Fig. 5-46

Measure the external diameter of the commutator, and replace the commutator if the measured diameter is 34.5mm(1.36in) or more.
If a lathe is used for repairing, the external diameter limit is 34.0mm(1.34in).

UNDERCUTTING THE SEGMENTS

If the shrinkage of the mold between segments is 0.2mm(0.008in) or less, undercut by 0.5 to 0.8mm(0.02~0.03in).

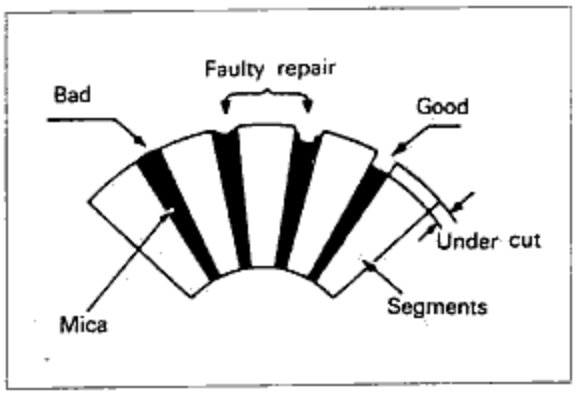

Fig. 5-47

WIRING DAMAGE OF THE FIELD COIL

Check for continuity between the connector and brush by using a circuit tester. Replace the yoke assembly if there is no continuity.

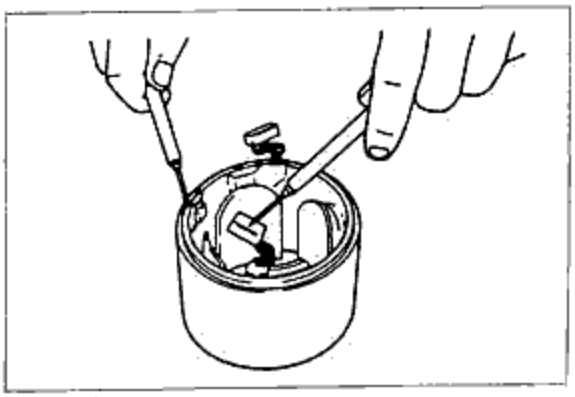
Fig. 5-48

CHECKING FOR BRUSH WEAR

If there is brush wear beyond the wear limit, or if the wear is near the limit, replace the brush.
Standard: 14.5mm(0.57in)
Wear limit: 10.0mm(0.39in)

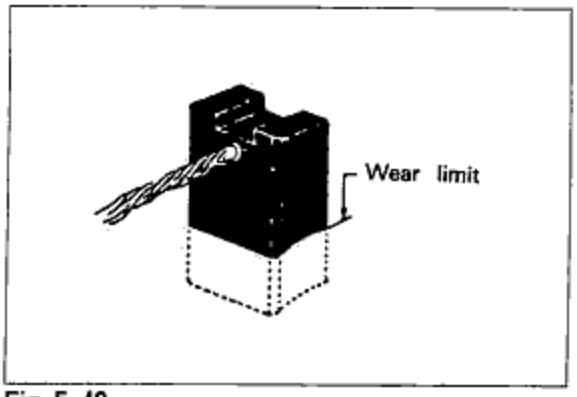

Fig. 5-49

CHECKING THE BRUSH HOLDER

Check for continuity between the insulated brush and the plate by using a circuit tester. Repair or replace if there is continuity.
Also check to be sure that the brush slides smoothly inside the brush holder.

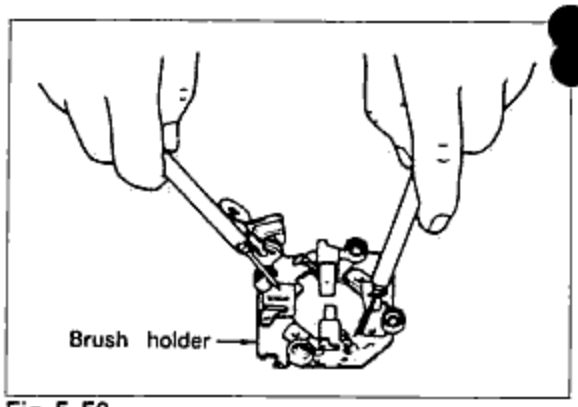

Fig. 5-50

CHECKING AND REPLACEMENT THE BEARING

There should be no apparent roughness or "catching" when the bearing is forcefully rotated by hand, and there should be no abnormal noise when it is rotated at high speed.
Take out the bearing, as shown in the figure, by using the suitable tools.

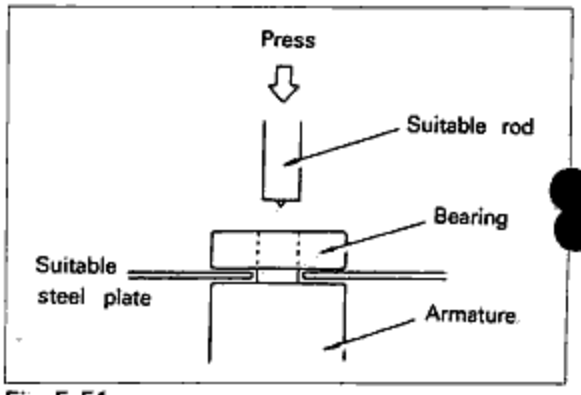

Fig. 5-51

CHECKING THE MAGNET SWITCH

1. Attraction test
   Make connections from the negative (−) terminal of the battery to the switch body and the "M" terminal.
   Next, when connecting from the positive (+) terminal of the battery to the "S" terminal, check to be sure that the pinion projects.

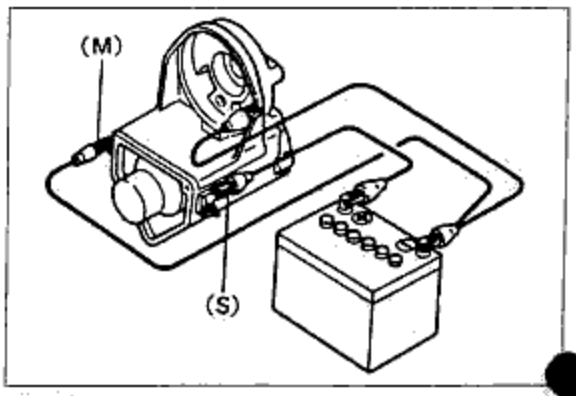

Fig. 5-52

2. Attraction-holding test
If the pinion is still projecting after the attraction test and the wire is disconnected from the "M" terminal, the condition is good.

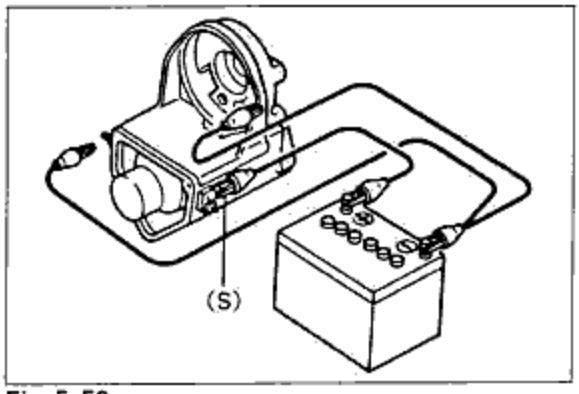

Fig. 5-53

3. Return test
Make connections from the negative (−) terminal of the battery to the switch body and to the "S" terminal. Then make a connection from the positive (+) terminal to the "M" terminal. In this condition, disconnect the wire from the "S" terminal.
The condition is good if the pinion returns immediately.

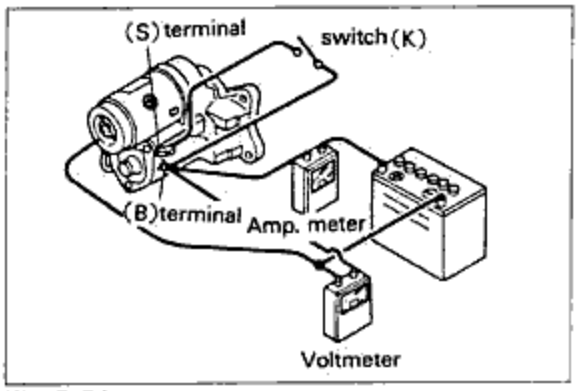

Fig. 5-54

◆ GREASE LUBRICATION

Apply grease(lithium base, N.L.G.I. No.2) to the places shown in the figure.

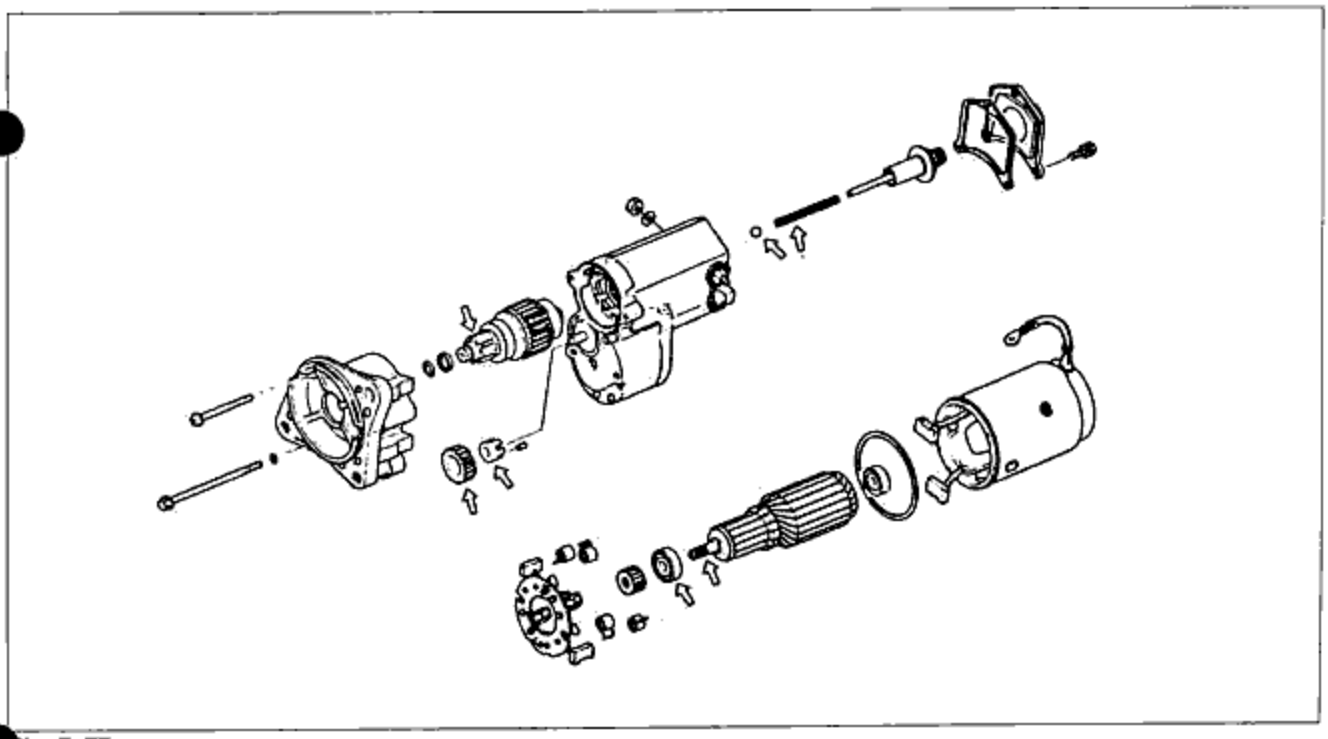
Fig. 5-55

◆ ASSEMBLY(MAIN POINTS)

1. Be careful not to forget to assemble the coil spring and the steel ball of the clutch when the housing and magnet switch are assembled.
   Also be sure not to forget to assemble the retainer and roller to the idle gear.

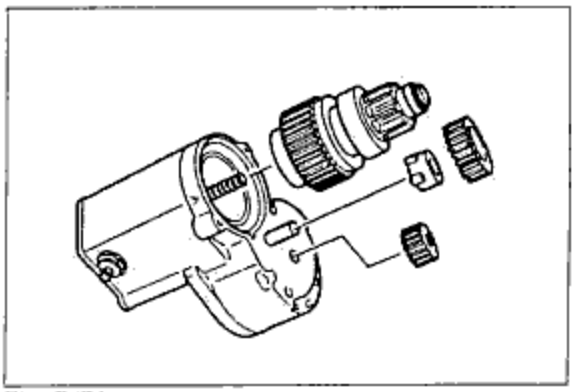

Fig. 5-56

2. As shown in the figure, assemble the brush holder to the yoke, and assemble the two brushes on the yoke side to the brush holder.

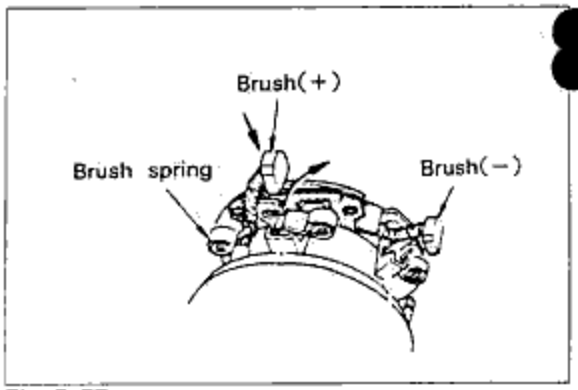

Fig. 5-57

3. When the yoke is assembled to the magnet switch, align the cut out part with the projection of the magnet switch.

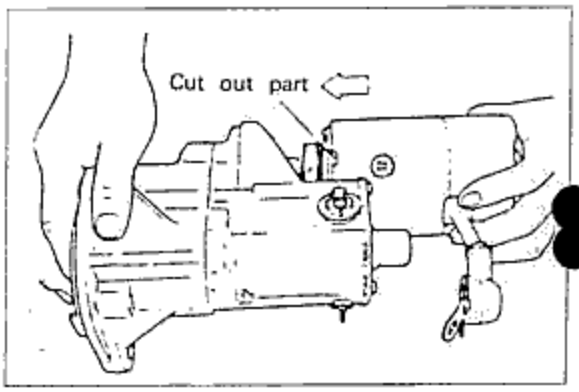

Fig. 5-58

PREFORMANCE TEST(FREE RUNNING TEST)

When making connections as shown in the figure and closing the switch (K), the starter rotates. If the starter smoothly rotates at the following current and rotating speed when the battery voltage is 12V, it is normal.

Current: Below 120A
Voltage: Below 11.5V
Speed: Over 4,000rpm

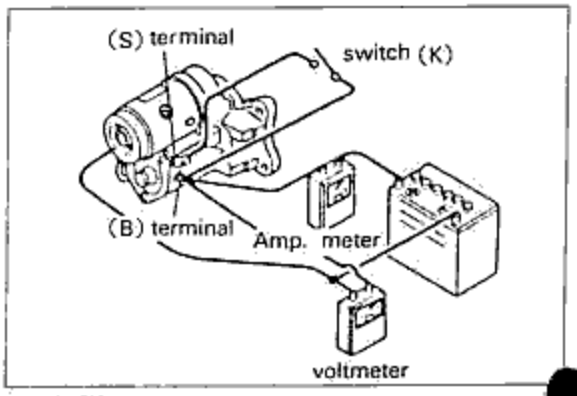

Fig. 5-59

STARTER-B(Gasoline engine : 0.95KW type)

STARTING SYSTEM CIRCUIT

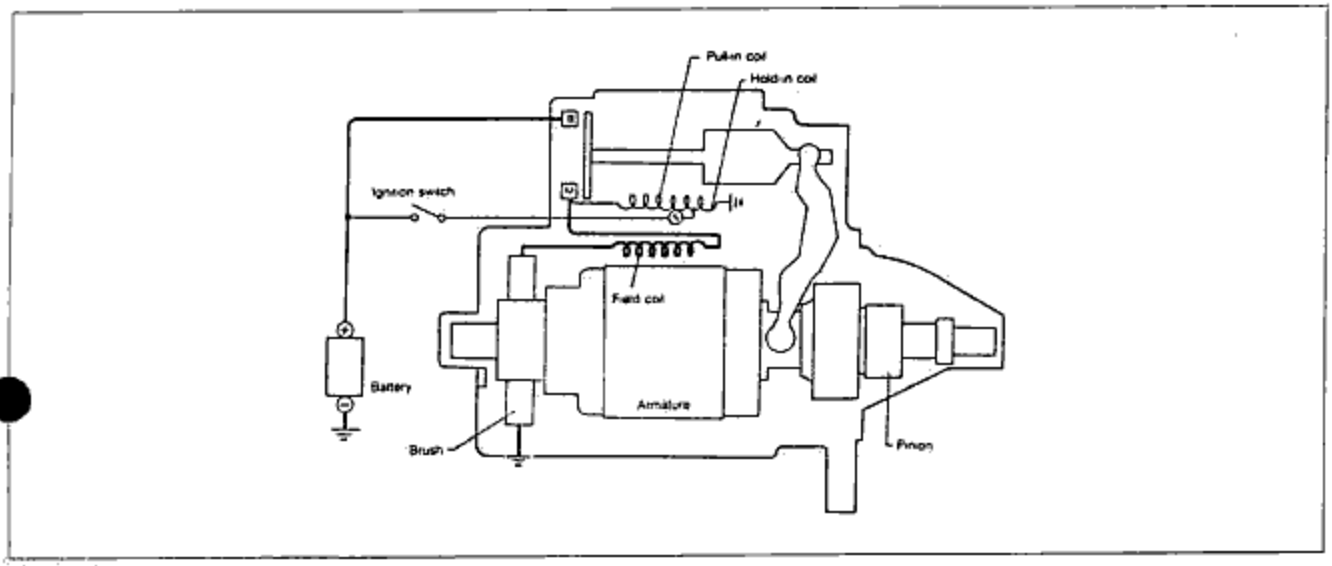

Fig. 5-60

ON-VEHICLE INSPECTION

Charge the battery fully before starting the following inspections.

A. If the magnetic switch dose not function during starting.

1. Turn the ignition switch to the start position.
2. Measure the voltage between the S terminal and ground.
3. If the measured value is standard voltage or more, there is starter malfunction.
4. If it is less than standard voltage, there is a malfunction in the wiring.

Standard voltage : 8V

Caution:

If the magnetic switch is hot, it may not function even though the voltage is standard voltage or more.

B. If the starter won't crank, or if the cranking speed is slow.

The problem may be a mulaunction of the starter or in the wiring.

NOTE

The cranking speed is greatly affected by the viscosity of the engine oil.

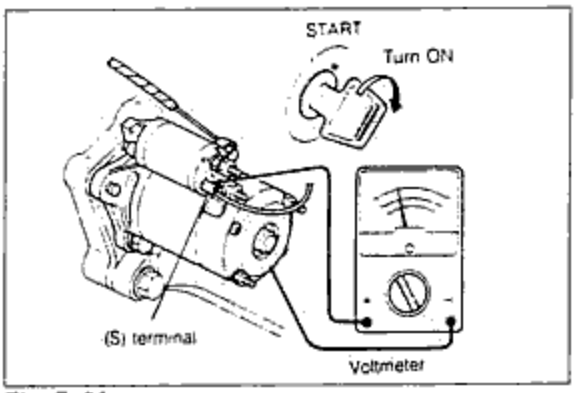

Fig. 5-61

◆ DISASSEMBLY AND ASSEMBLY

1. Disassemble in the numbered order shown in the figure.
2. Assembly is the reverse order of disassembly.

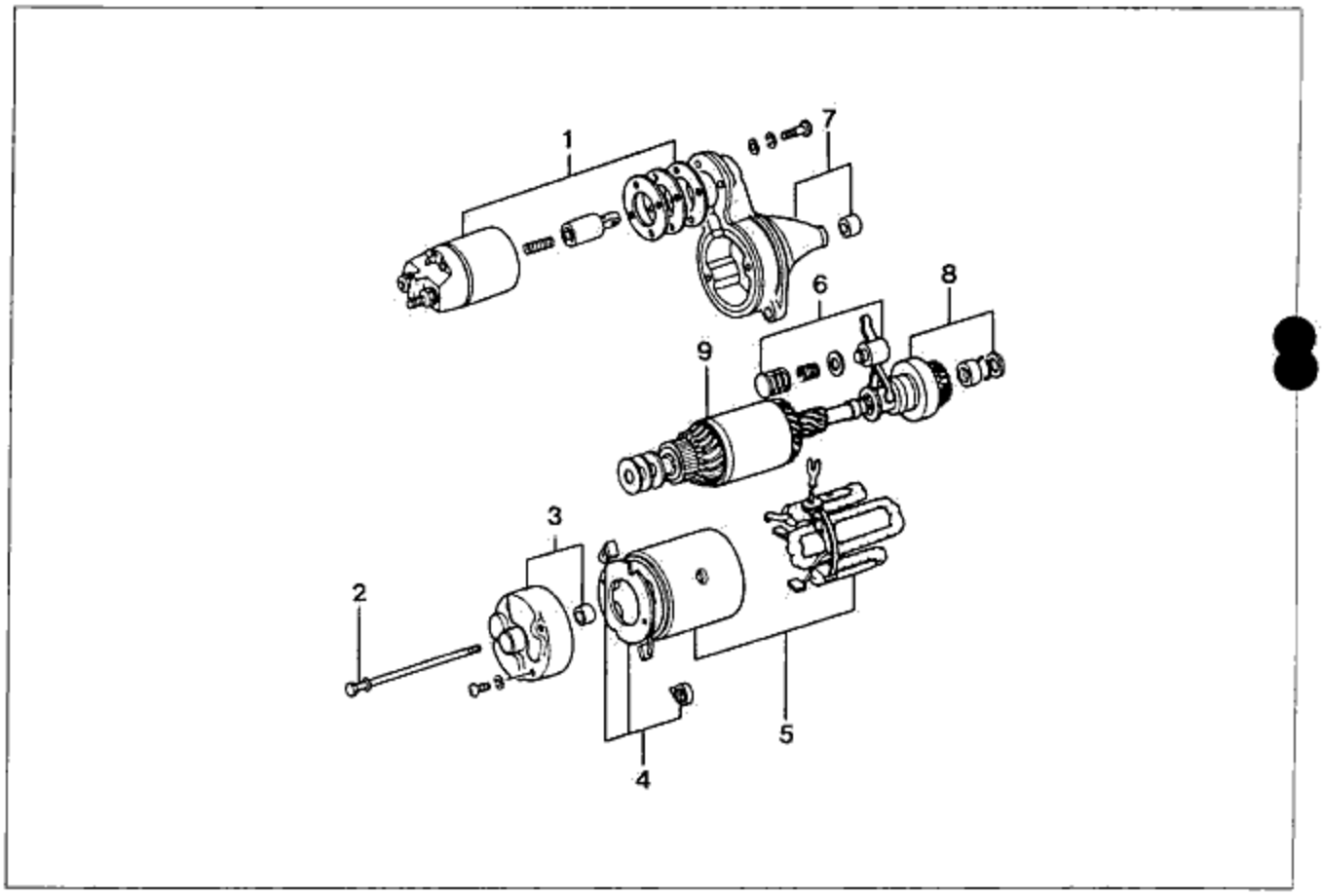

Fig. 5-62

1. Magnetic switch
2. Bolt
3. Rear cover
4. Brush-holder assembly
5. Yoke
6. Lever
7. Drive housing (front cover)
8. Drive pinion
9. Armature

DRIVE PINION

Remove the stopper for the overrunning clutch by using a pipe as shown in the figure.

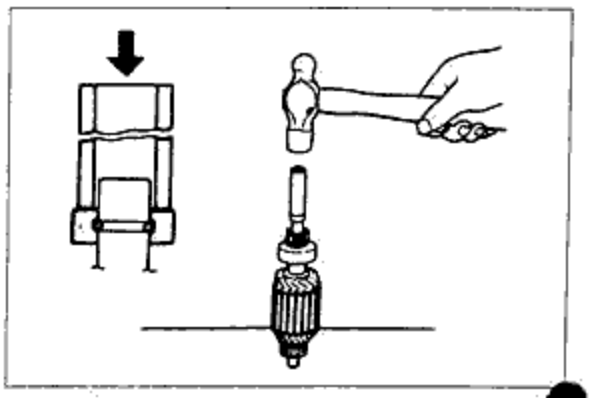

Fig. 5-63

ADJUSTMENT OF PINION GAP

1. Disconnect the wiring from terminal (M).
2. Apply battery power to the terminal (S) and ground the starter motor body, the pinion will eject outward and then stop.
3. Measure the clearance(pinion gap) between the pinion and the stopper.

Pinion gap : 0.5~2.0mm(0.020~0.079 in)

Caution :

Do not let electricity flow continuously for more than 10 seconds.

4. If the pinion gap is not within the specified range, make the adjustment by increasing or decreasing the number of washers used between the magnetic switch and the drive housing. The gap will become smaller if the number of washers is increased.

Caution :

Do not use the washers more than 2mm(0.079 in) in all.

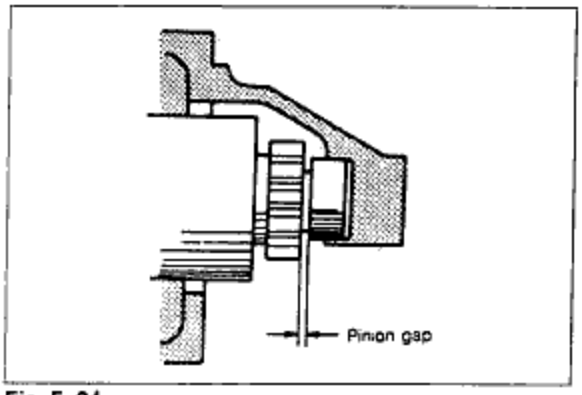

Fig. 5-64

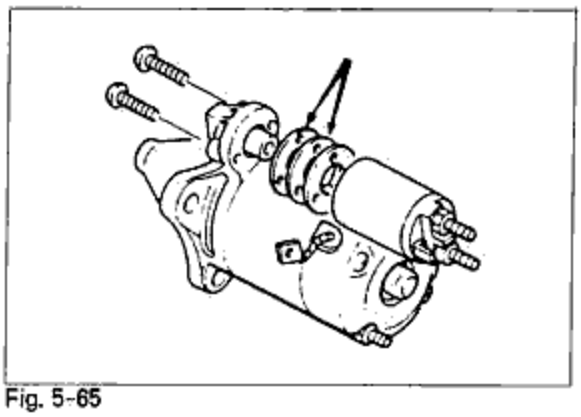
Fig. 5-65

◆ INSPECTION

ARMATURE COIL

1. Ground of the armature coil
   (1) Check for continuity between the commutator and the core by using a circuit tester.
   (2) Replace the armature if there is continuity.

2. Vibration of the commutator
   (1) Place the armature on V blocks, and measure the vibration by using a dial gauge.
   (2) If the vibration is Limit or more, repair so that it becomes standard by using a lathe, or replace the armature.

Standard vibration : 0.05mm(0.002 in)
Limit : 0.4mm(0.018 in)

NOTE

Before checking be sure that there is no play in the bearings.

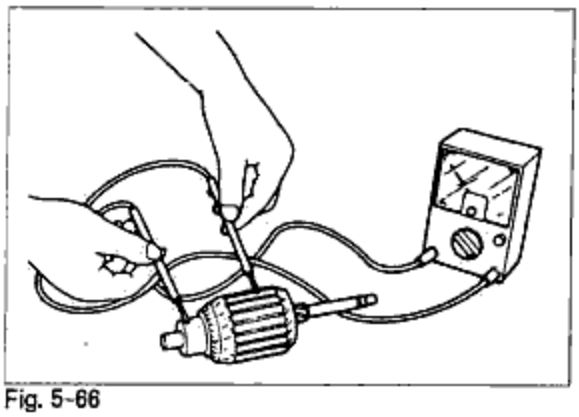
Fig. 5-66

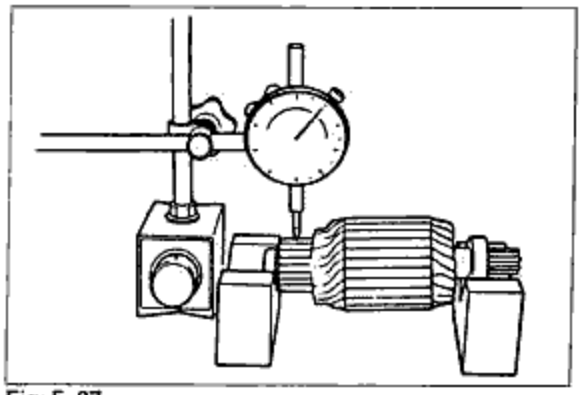
Fig. 5-67

3. Outer diameter of the commutator
   Replace the armature if the outer diameter of the commutator is grind limit or less.
4. Roughness of the commutator surface
   (1) If the commutator surface is dirty, wipe it with a cloth.
   (2) If it is rough, repair it by using a lathe or fine sandpaper.

Grind limit : 31mm(1.22 in)

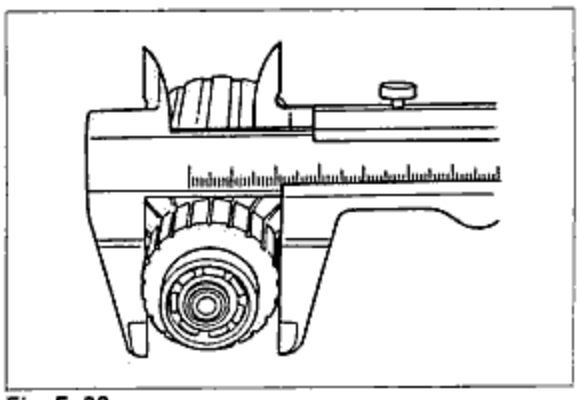

Fig. 5-68

5. Segment groove depth
   If the depth of the mold between segments is limit depth or less, undercut the grooves by standard depth.

Standard depth : 0.5~0.8mm(0.020~0.031 in)
Limit depth : 0.2mm(0.008 in)

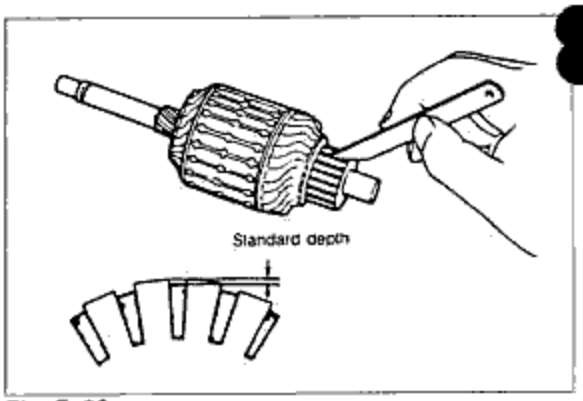

Fig. 5-69

FIELD COIL

1. Wiring damage
   (1) Check for continuity between the connector and brushes by using a circuit tester.
   (2) Replace the yoke assembly if there is no continuity.

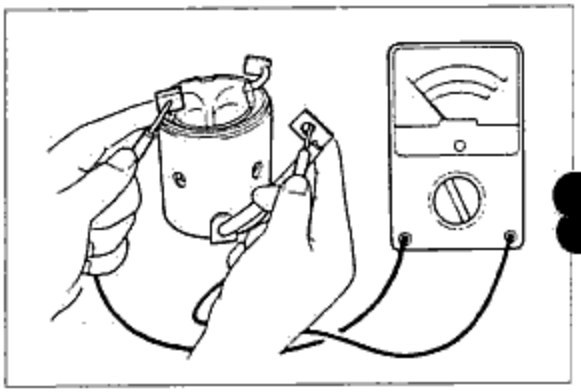

Fig. 5-70

2. Ground of the field coil
   (1) Check for continuity between the connector and yoke by using a circuit tester.
   (2) Repair, or replace the yoke assembly if there is continuity.

3. Installation of the field coil
   Replace the yoke assembly if the field coil is loose.

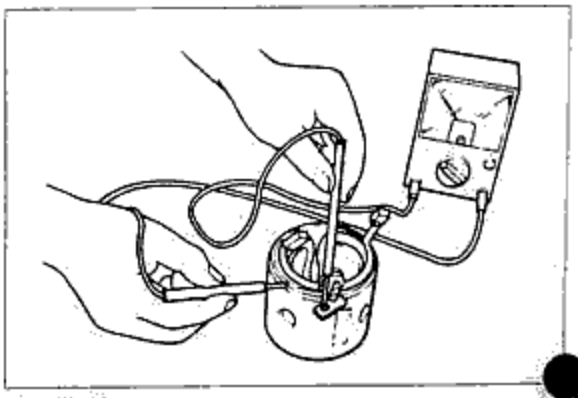

Fig. 5-71

BRUSH AND BRUSH HOLDER

1. Brush

If the brushes are worn beyond the wear limit, or if the wear is near the limit, replace the brushes.

Standard : 17mm(0.669 in)
Wear limit : 11.5mm(0.453 in)

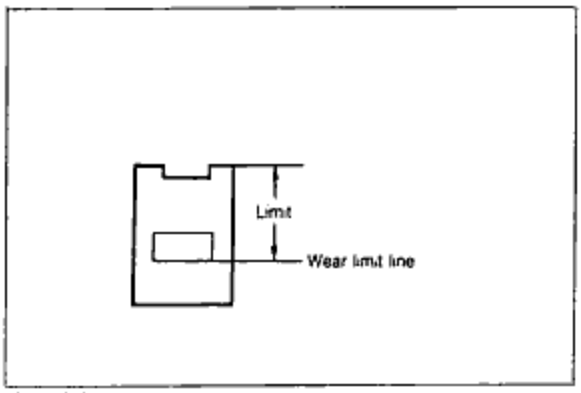

Fig. 5-72

2. Brush spring

(1) Measure the force of the brush spring by using a spring balance.
(2) Replace the brush spring if the force is limit or less.

Limit : 9N(900g, 31.75 oz)

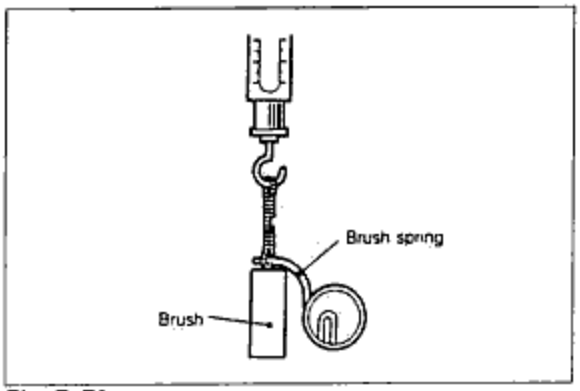

Fig. 5-73

3. Brush holder

(1) Check for continuity between the insulated brush and the plate by using a circuit tester.
(2) Repair or replace if there is continuity.
(3) Also check to be sure that the brush slides smoothly inside the brush holder.

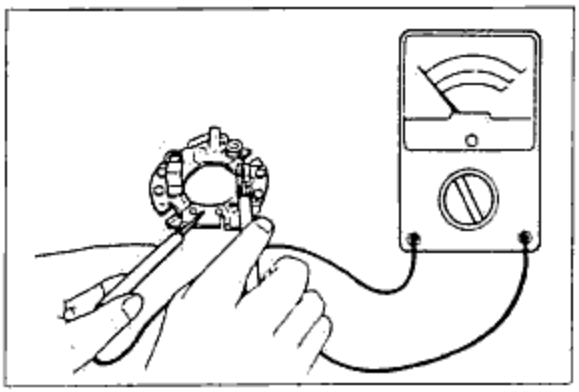

Fig. 5-74

DRIVE PINION AND HOUSING

1. Pinion gear

(1) Check for wear or damage of the pinion gear.
(2) Replace if necessary.
(3) If the pinion gear is seriously damaged, also check the flywheel ring gear.

2. Bushing

(1) Check for wear or damage.
(2) Replace if necessary.

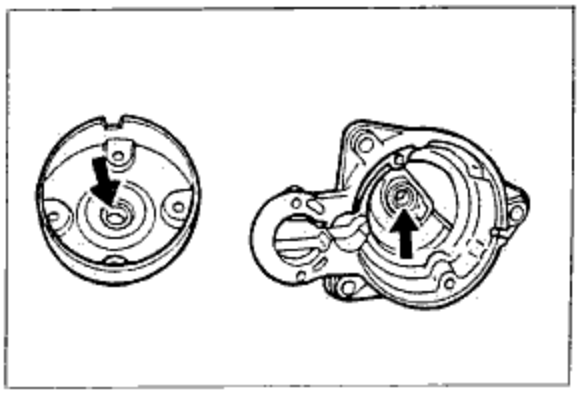

Fig. 5-75

3. Switch coil
   (1) Check for continuity between the M terminal and the body by using a circuit tester.
   (2) Replace the switch if there is no continuity.

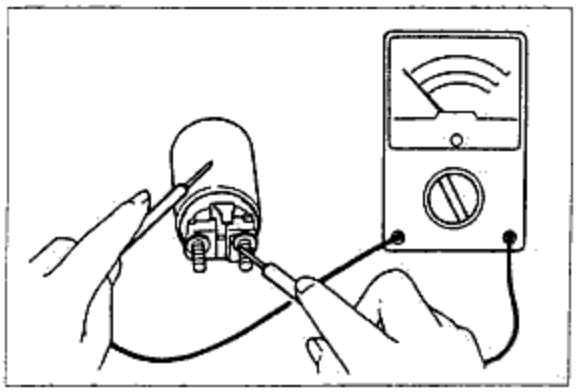

Fig. 5-76

PERFORMANCE INSPECTION

Magnetic Switch

Disconnect the terminal M wire, and make the following tests.

Pull-in Test

The switch is normal if the pinion ejects outward when the battery is connected as shown in the figure.

Caution :

Do not supply power continuously for more than 10 seconds.

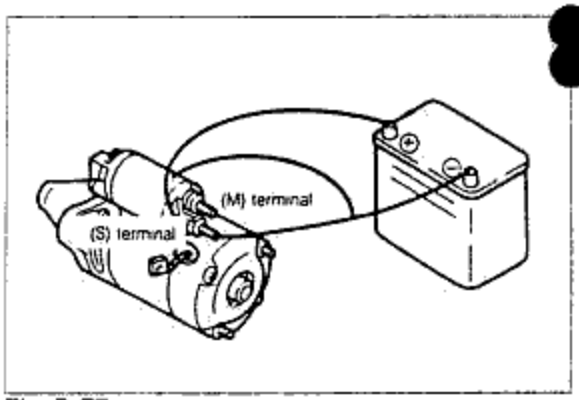

Fig. 5-77

Hold-in Test

1. After completing the pull-in test, disconnect the wire from terminal M(with the pinion left ejected).
2. The hold-in coil is functioning properly if the pinion does not return.

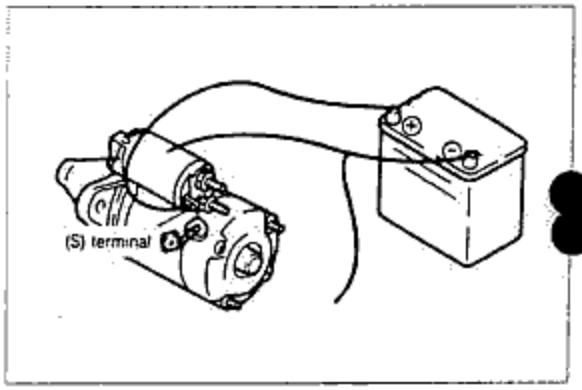

Fig. 5-78

Return Test

1. Connect the battery between terminal M of the magnetic switch and the body, as shown in the figure.
2. Pull the pinion out manually to the pinion stopper position.
3. The pinion should immediately return to its original position when it is released.

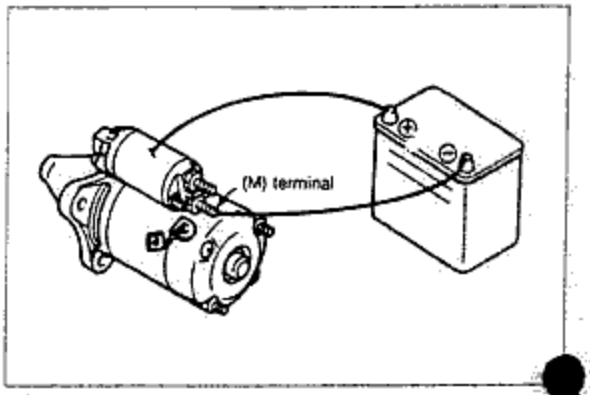

Fig. 5-79

No-load Test

1. After adjusting the pinion gap, form a test circuit with a voltmeter and an ammeter as shown.

NOTE

Use wires as thick as possible and tighten each terminal fully.

2. Close switch "K" to run the starter.
3. If the voltmeter and ammeter show the following values while the starter is running, it is normal.

	0.95KW type
Battery Voltage(volt)	11.5
Current(ampere)	60 or less
Gear shaft speed(rpm)	6,600 or more

4. If any abnormality is noted, check it according to "INSPECTION".

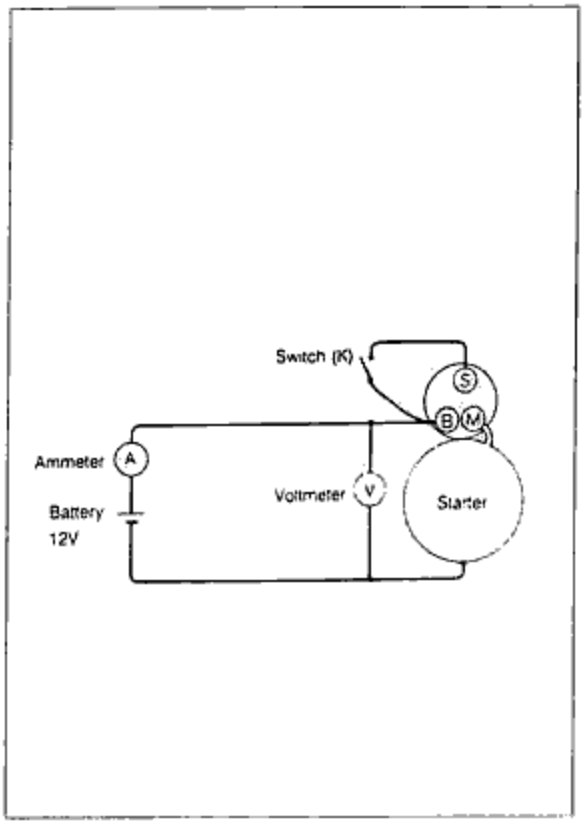

Fig. 5-80

⊠ QUICK START SYSTEM(QSS)

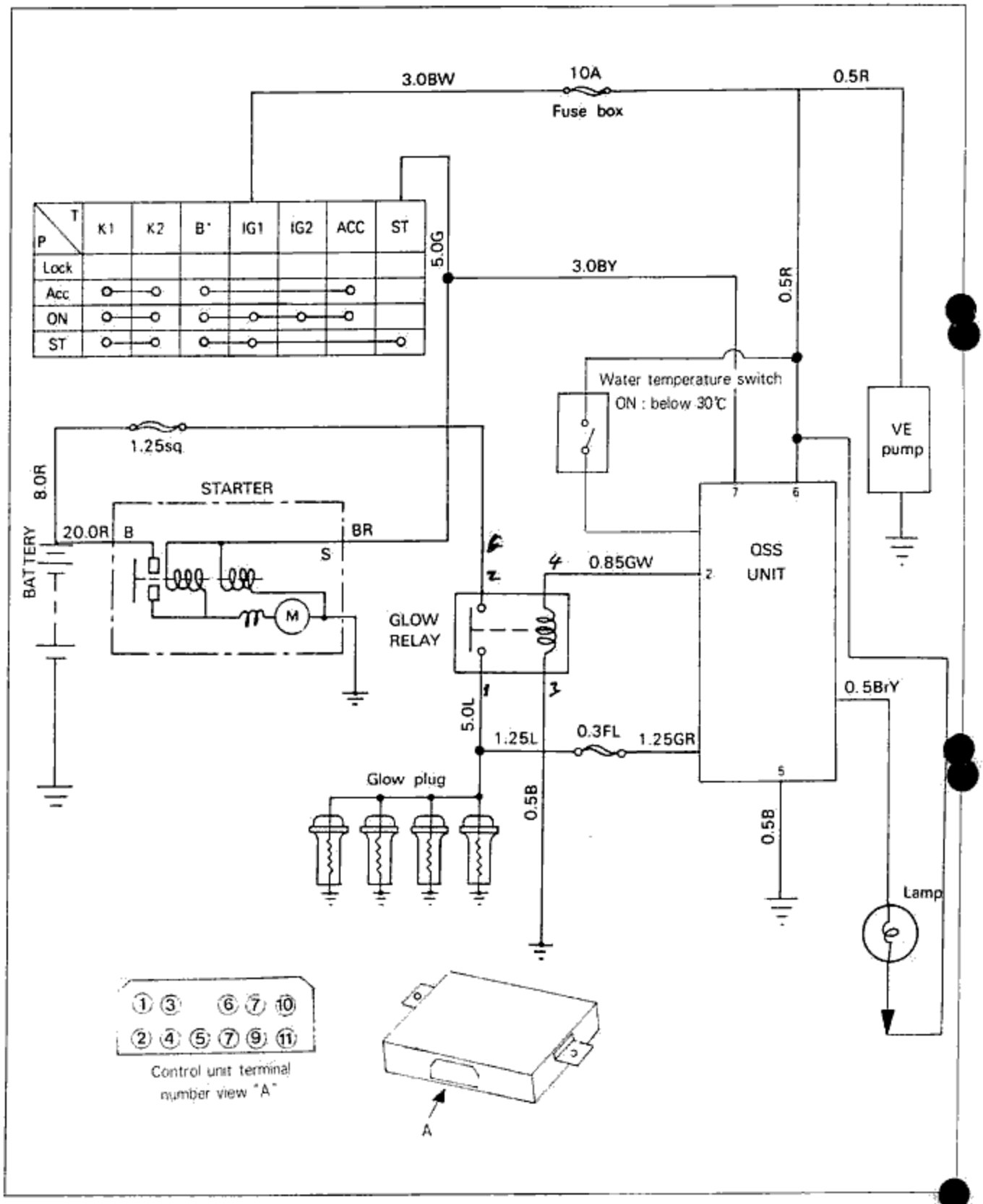

Fig. 5-81

GLOW PLUG

CHECKING OPEN CIRCUIT OF GLOW PLUGS

Check the continuity between the positive terminal of the glow plug and cylinder head with a circuit tester.
If there is no continuity, replace the glow plug.

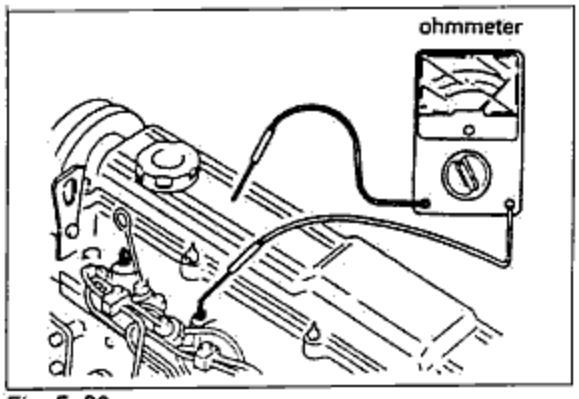

Fig. 5-82

REPLACING GLOW PLUGS

Remove in the following order

1. Glow plug connector attaching nut. Use a suitable wrench.
2. Glow plug connector
3. Glow plug

NOTE

Turn the glow plug counterclockwise and remove it.

To install the glow plug, reverse order of removing.

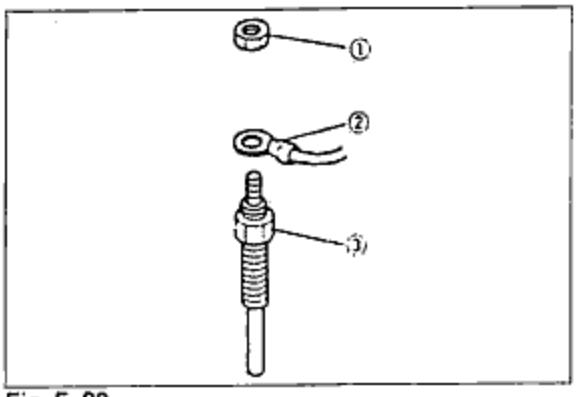

Fig. 5-83

CHECKING GLOW PLUG RELAY

1. As shown in the figure, connect the battery and an ohmmeter to the relay.
2. If the ohmmeter shows continuity when the battery is connected, and no continuity when the battery is disconnected, the relay is good.
3. Replace the relay if it fails this test.

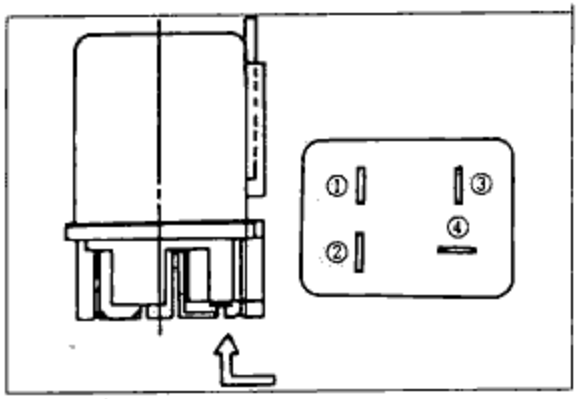

Fig. 5-84

VACUUM PUMP

CHECKING ON VEHICLE

1. Tape the alternator pulley with scotch light tape, and attach a tachometer to the engine.
2. Connect a vacuum gauge to the vacuum hose between the vacuum pump and power brake unit, and check whether or not the vacuum is within specification.
   After 20 seconds: 440 mmHg or more at alternator 1,500 rpm (Engine 850rpm)

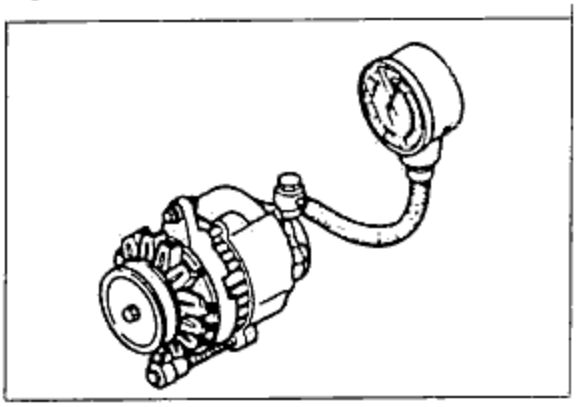
Fig. 5-85

After 20 seconds:580mmHg or more at alternator 3,000rpm(Engine 1,350rpm)

NOTE

Use a photoelectric tachometer to measure the alternator rpm.

◆ INSPECTION

1. Check the rotor, housing and center plate for wear or damage.
2. Check the O-ring for deterioration or damage.
3. Check the vane for wear or damage.
   Standard vane length: 13.0~13.5mm(0.512~0.530in)

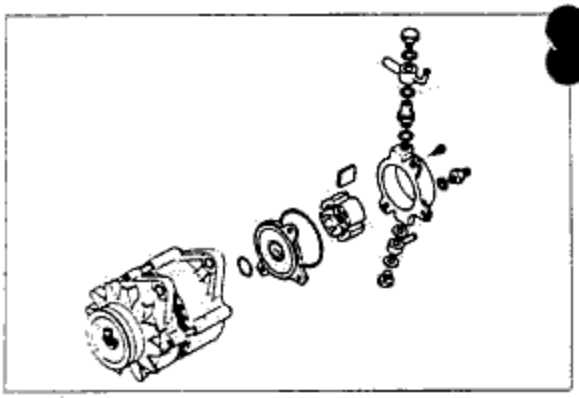

Fig. 5-86

NOTE

Wear on the bottom surface of the vane caused by contacting the center plate guide ring is normal.

4. Check the housing inner diameter.
   Standard housing inner diameter:57.0~57.1mm(2.244~2.248in)

◇ DRIVE BELT

The tension and inspection point differ depending upon the accessory equipment.

Drive belt		Deflection	
		New	Used
1	Alternator	11~12mm (0.44~0.47in)	12~14mm (0.47~0.55in)
2	Air conditioner	4~5mm (0.18~0.20in)	5~6mm (0.20~0.24in)

SPARK PLUG

REMOVAL AND INSTALLATION

Note the following points:

1. When the high-tension leads is to be pulled off, be sure to pull the boot itself, and not the wire.
2. Tighten the spark plugs to the specified torque.
   Tightening torque: 1.5~2.3m-kg(10.8~16.6ft-lb)

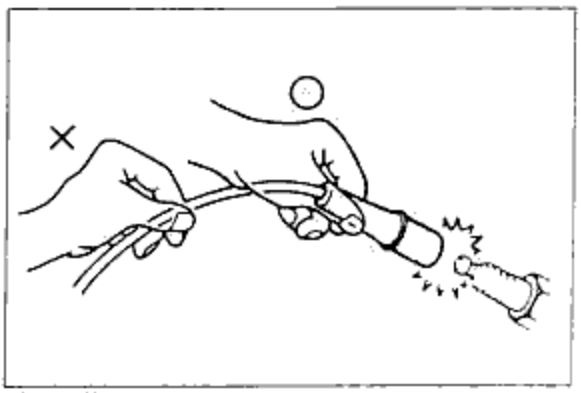

Fig. 5-87

INSPECTION

Check the following points. If a problem is found, replace the spark plug.

1. Damaged insulation
2. Worn electrodes
3. Carbon deposits
   If cleaning is necessary, use a plug cleaner or a wire brush. Clean the upper insulator also.
4. Damaged gasket
5. Burnt condition of spark insulator
6. If it is black with carbon deposits, either misfiring due to improper proportions of gas and air or overheating of the plug may have occurred.
   Plug gap: 0.75~0.85mm(0.030~0.034in)

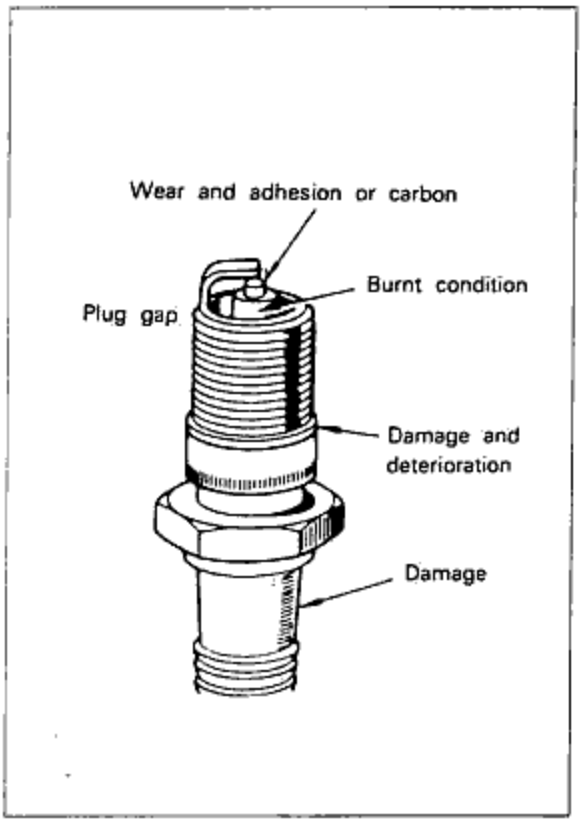

Fig. 5-88

HIGH-TENSION LEAD

INSPECTION

Use a tester to measure the resistance.
Resistance: 16 kΩ per 1m(3.28ft)

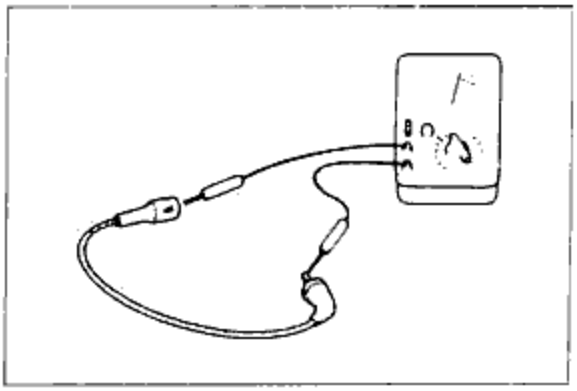

Fig. 5-89

IGNITION COIL

INSPECTION

PRIMARY COIL

Measure the resistance of the primary coil, using an ohmmeter.

Standard resistance: 1.0~1.3Ω

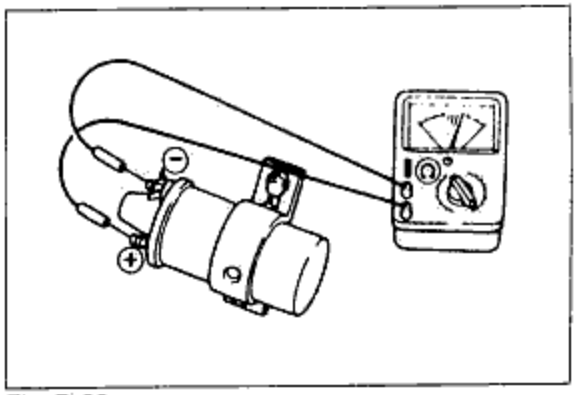

Fig. 5-90

SECONDARY COIL

Measure the resistance of the secondary coil, using an ohmmeter.

Standard resistance: 10~30kΩ

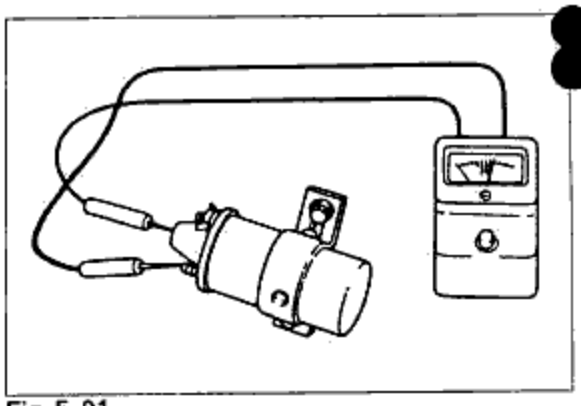

Fig. 5-91

INSULATION OF CASE

Measure the insulation resistance between the primary termainal and the case, using an ohmmeter.

Standard resistance: More than 10MΩ

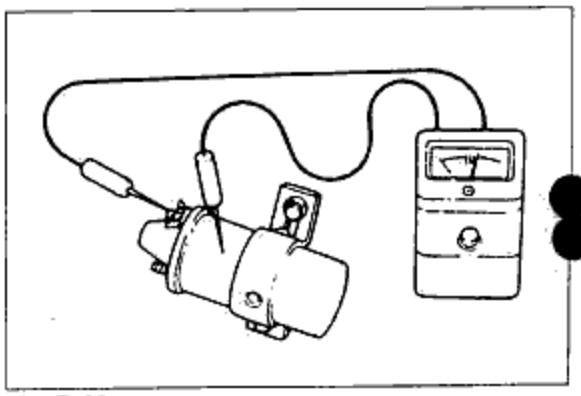

Fig. 5-92

DISTRIBUTOR

INSPECTION

SPARK TEST

1. Disconnect the distributor lead from distributor.
2. Hold it 5~10mm(0.20~0.39in) far from a ground.
3. Crank the engine and make sure the strong sparks fly.
4. If there is no spark, the ignition coil or pick-up coil may be bad.
   Check once again after replacing the ignition coil or pick-up coil.

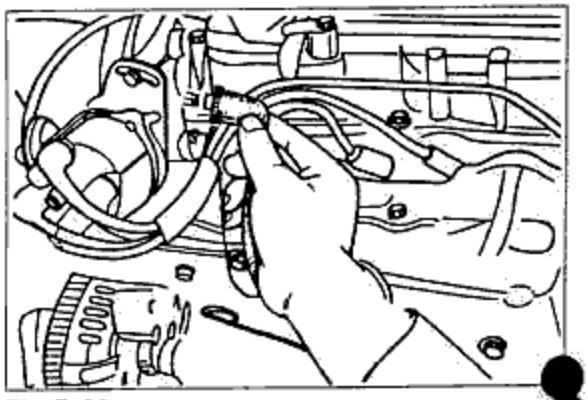

Fig. 5-93

IGNITION TIMING

1. Warm up the engine. Run it at idle.
2. Turn all electric loads OFF.
3. Disconnect the wiring connector to the engine cooling fan.
4. Connect a tachometer and timing light.
5. Check idle speed, adjust it if necessary.

Idle speed: 750$^{+50}_{0}$ (MTX)
900$^{+50}_{0}$ (ATX)

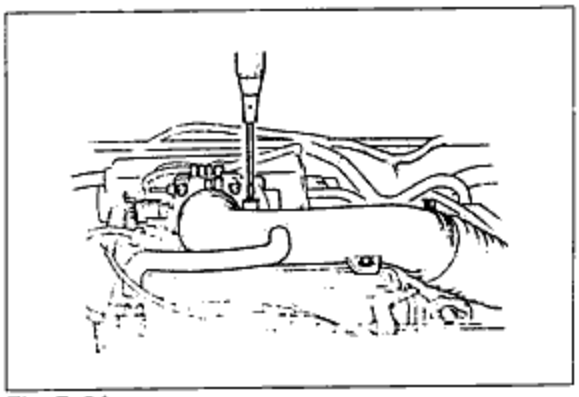

Fig. 5-94

6. Disconnect the vacuum hose(s) from the vacuum control, and plug the hose(s).

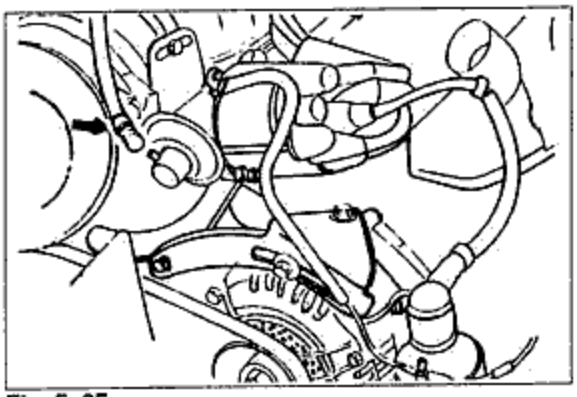

Fig. 5-95

7. With a timing light check the mark (yellow) on the crankshaft pully and the timing mark(6°) on the timing belt cover are aligned.

Initial ignition timing: 6° ± 1° BTDC

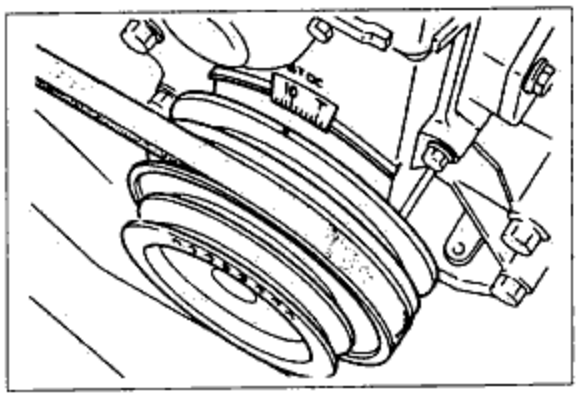

Fig. 5-96

8. If the marks aren't aligned, loosen the distributor body installation nut, and turn the body to make the adjustment. Set to specifications.
9. Remove the timing light and connect the wiring connector to the engine cooling fan.
10. Re-connect the vacuum hose(s).

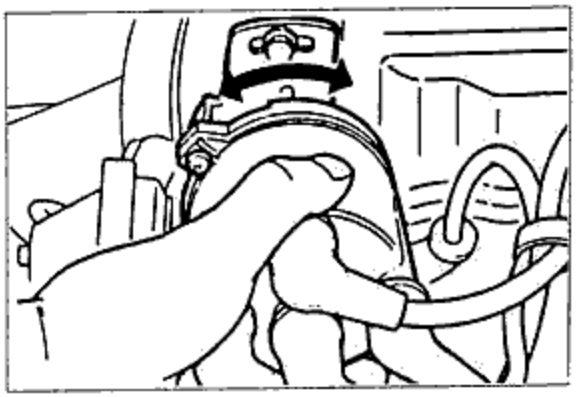

Fig. 5-97

CENTRIFUGAL SPARK ADVANCE CONTROL

1. Warm-up the engine.
2. Check to be sure that the idle speed and ignition timing are correct.
3. Disconnect the vacuum hose(s) to the vacuum control, and plug the end of the hose(s).

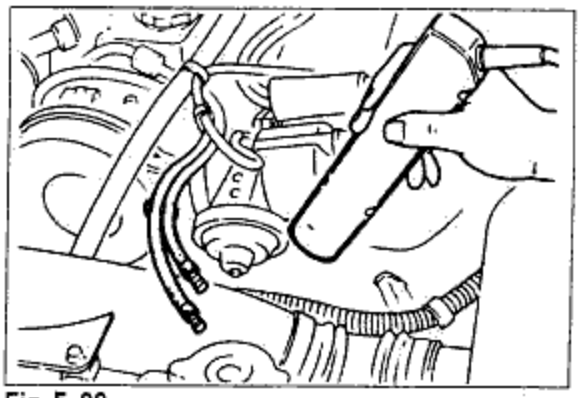

Fig. 5-98

4. While gradually increasing the engine speed, use a timing light to check the advance angle on the pulley.
   Excess advance;
   Weak governor spring (if the grovernor spring is broken, the advance will rise very high)
   Insufficient advance;
   Governor weight or cam malfunction

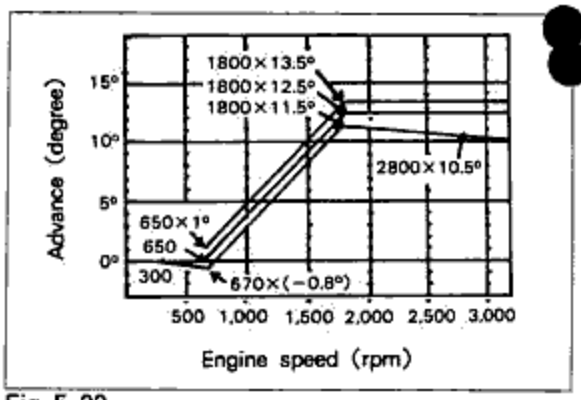

Fig. 5-99

VACUUM SPARK ADVANCE CONTROL (NORMALLY ASPIRATED ENGINE)

1. Warm up the engine.
2. Check to be sure that the idle speed and ignition timing are correct.
3. Disconnect the vacuum hose(s) to the vacuum control, and plug the end of the hose(s).
4. Attach a vacuum pump to the control A only and check by using a timing light while applying vacuum.

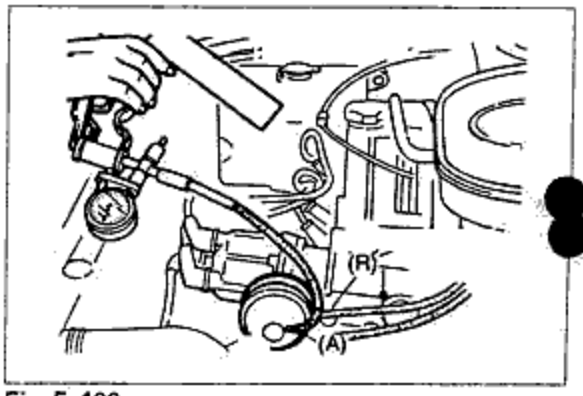

Fig. 5-100

5. Next, attach the vacuum pump to control R only, and check by using the timing light while applying vacuum.
6. Reconnect the vacuum hose(s).

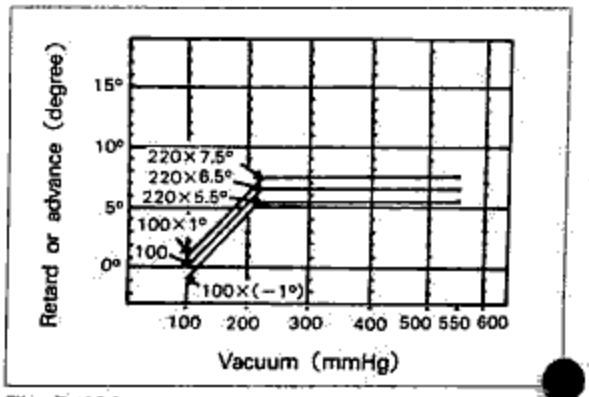

Fig. 5-101

OTHERS

1. Check corrosion, damage, cracks and stains on the rotor or distributor cap.
2. Check damage to the "O" ring or oil seal.

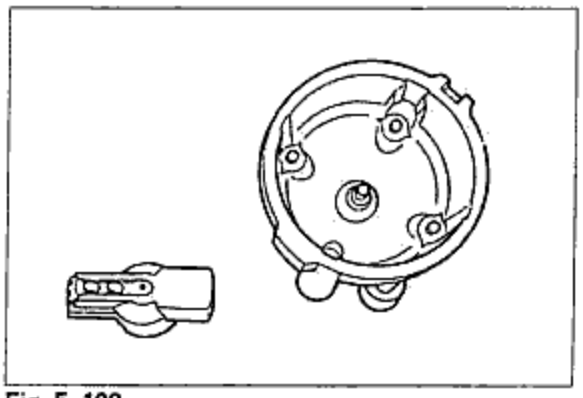

Fig. 5-102

◆ INSTALLATION

Installation is the reverse order of removal.

Note the following points.

1. **Coat the "O" ring with engine oil.**
2. **Check the No.1 cylinder is at top dead center.**
3. **Install after aligning the distributor matching marks.**
4. **Adjust the ignition timing after installation.**

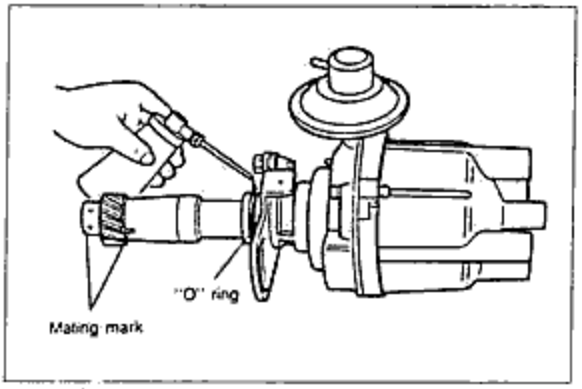

Fig. 5-103

◆ DISASSEMBLY AND ASSEMBLY

1. Disassemble in the numbered order shown in the figure.
2. Assembly is the reverse order of disassembly.

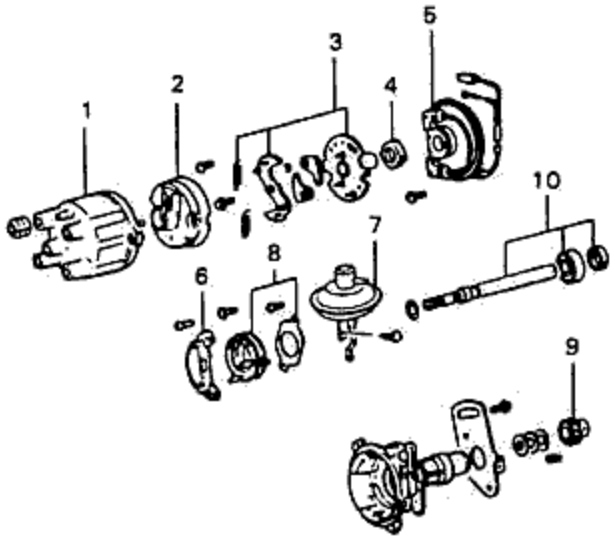

1. Cap
2. Rotor
3. Governor set
4. Reluctor
5. Pick-up coil
6. Igniter
7. Vacuum control unit
8. Breaker
9. Driven gear
10. Shaft

Fig. 5-104

MEMO

CLUTCH

6

- OUTLINE ..... 6—2
- SPECIFICATIONS ..... 6—3
- TROUBLESHOOTING GUIDE ..... 6—3
- ON-VEHICLE MAINTENANCE ..... 6—4
  - FLUID LEVEL ..... 6—4
- INSPECTION AND ADJUSTMENT ..... 6—4
  - CLUTCH PEDAL HEIGHT ..... 6—4
  - CLUTCH PEDAL PLAY ..... 6—4
- CLUTCH PEDAL ..... 6—5
  - STRUCTURAL VIEW ..... 6—5
  - INSPECTION ..... 6—6
  - INSTALLATION ..... 6—6
- MASTER CYLINDER ..... 6—7
  - REMOVAL ..... 6—7
  - DISASSEMBLY ..... 6—8
  - INSPECTION ..... 6—9
  - ASSEMBLY ..... 6—9
  - INSTALLATION ..... 6—9
- RELEASE CYLINDER ..... 6—10
  - DISASSEMBLY ..... 6—11
  - ASSEMBLY ..... 6—11
  - INSTALLATION ..... 6—11
- CLUTCH AND FLYWHEEL ..... 6—13
  - REMOVAL ..... 6—13
  - INSPECTION ..... 6—14
  - INSTALLATION ..... 6—16

OUTLINE

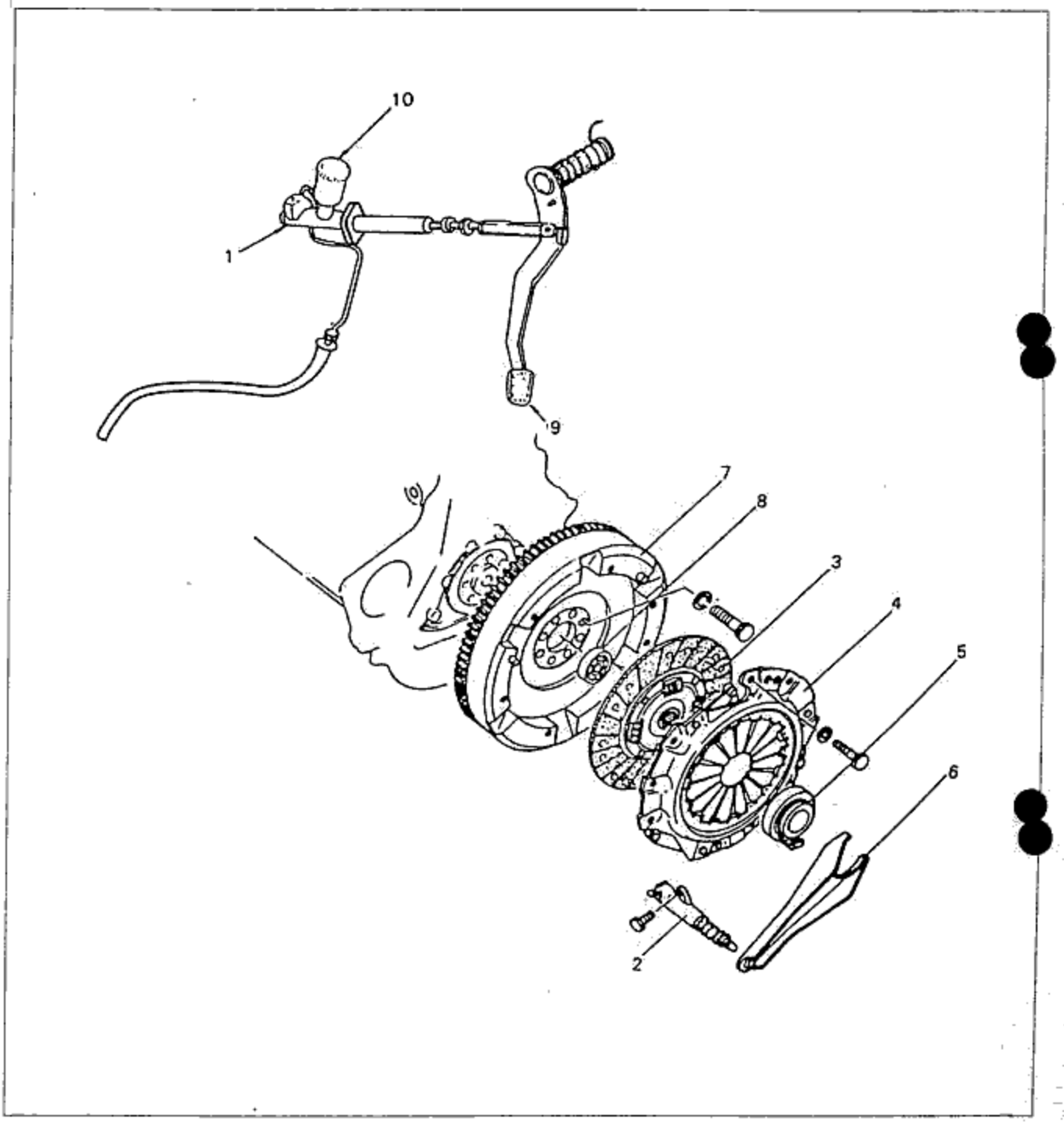

Fig. 6-1

1. Clutch master cylinder
2. Clutch release cylinder
3. Clutch disc
4. Clutch cover
5. Clutch release bearing
6. Clutch release fork
7. Flywheel
8. Pilot bearing
9. Clutch pedal
10. Reservoir

SPECIFICATIONS

Items		Specifications
Clutch control		Hydraulic type
Clutch cover	Type	Diaphragm spring
Clutch discs	Outer diameter × inner diameter × thickness mm(in)	225 × 150 × 3.5 (8.858 × 5.906 × 0.138)
Clutch pedal	Type	Hanger type
	Pedal ratio	6.3 : 1
	Full stroke mm(in)	144(5.67)
	Height mm(in)	200.5(7.89)
Master cylinder inner diameter mm(in)		15.87(5/8)
Release cylinder inner diameter mm(in)		19.05(3/4)
Clutch fluid		SAE J1703a or FMVSS 116, DOT-3 or DOT-4

TROUBLESHOOTING GUIDE

Problem	Possible cause	Correction
Slipping	Clutch disc facing worn excessively	Replace
	Clutch disc facing surface hardened, or oil on surface	Repair or replace
	Pressure plate damaged	Repair or replace
	Diaphragm spring damaged or weakened	Replace
	Insufficient clutch pedal play	Adjust
	Clutch pedal sticking	Repair or replace
	Flywheel damaged	Repair or replace
Faulty disengagement	Excessive run-out or damage of clutch disc	Replace
	Clutch disc splines rusted or worn	Remove rust, or replace
	Oil on facing	Repair or replace
	Diaphragm spring weakened	Replace
	Excessive clutch pedal play	Adjust
	Insufficient clutch fluid	Add fluid
	Leakage of clutch fluid	Repair or replace
Clutch vibrates when starting	Oil on facing	Repair or replace
	Torsion spring weakened	Replace
	Clutch disc facing hardened or damaged	Repair or replace
	Clutch disc facing rivets loose	Replace
	Pressure plate damaged or excessive run-out	Replace
	Flywheel surface hardened or damaged	Repair or replace
	Loose or worn engine mount	Tighten or replace
Clutch pedal sticking	Pedal shaft not properly lubricated	Lubricate or replace
Abnormal noise	Clutch release bearing damaged	Replace
	Poor lubrication of release bearing sleeve	Lubricate or replace
	Torsion spring weakened	Replace
	Excessive crankshaft end play	Repair
	Pilot bearing worn or damaged	Replace
	Worn pivot points of release fork	Repair or replace

ON-VEHICLE MAINTENANCE

FLUID LEVEL

1. Clean the area around the reservoir and the reservoir cap.
2. Check the fluid level. If the level is near or below the "MIN" mark, add brake fluid to the "MAX" mark.

Fluid specification :
DOT-3 or DOT-4
(FMVSS 116, or SAEJ 1703a)

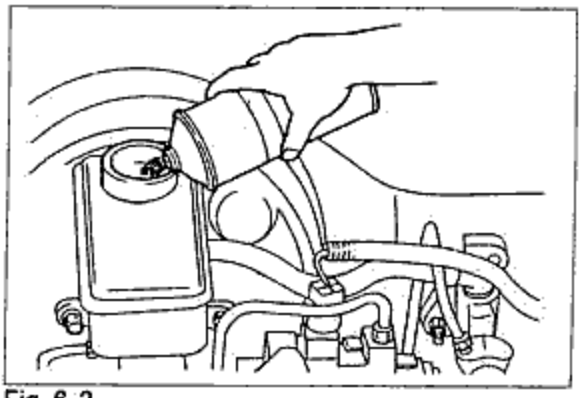

Fig. 6-2

INSPECTION AND ADJUSTMENT

CLUTCH PEDAL HEIGHT

Inspection

Remove the carpet and measure the distance from the upper surface of the pedal pad to the firewall.

Standard height : 144~154mm(5.67~6.06 in)

Adjustment

1. Adjust the clutch pedal height by loosening lock nut Ⓐ and turning stopper bolt Ⓑ.
2. After the adjustment, tighten lock nut Ⓐ.

Tightening torque :
14~18N·m(1.4~1.8kg·m, 10~13ft·lb)

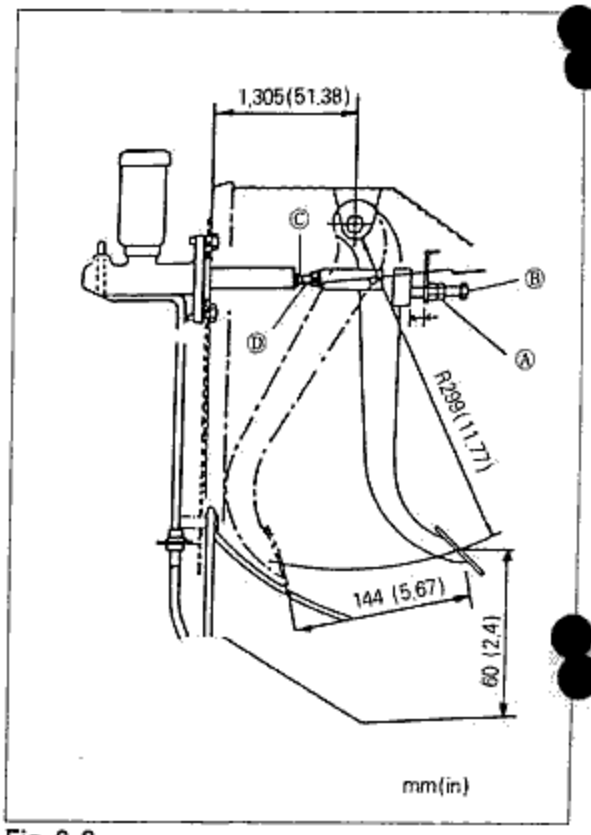

Fig. 6-3

CLUTCH PEDAL PLAY

Inspection

Depress the clutch pedal lightly by hand and measure the free play.

Standard play : 8~15mm(0.31~0.59 in)

Adjustment

1. Adjust the free play by loosening lock nutⒸ and turning push rodⒹ.
2. Check that the distance from the floor to the center of the upper surface of the pedal pad is correct when the pedal is fully depressed. If it is not within specification, readjust it.
3. After adjustment, tighten lock nutⒸ.

Disengagement height : 60mm(2.4 in) or more

CLUTCH PEDAL

STRUCTURAL VIEW

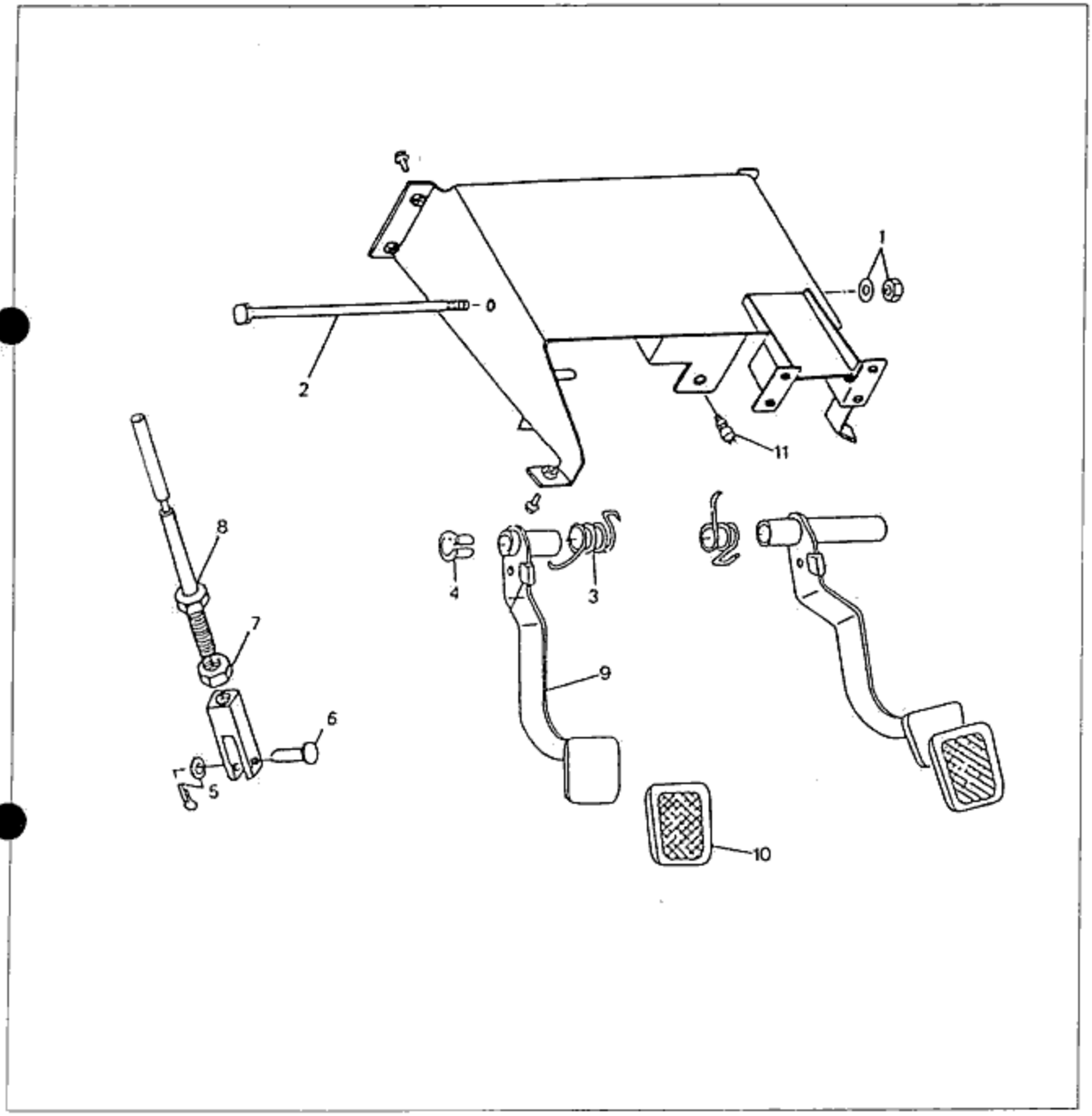

Fig. 6-4

1. Nut and washer
2. Shaft
3. Return spring
4. Bushing
5. Split pin and washer
6. Pin
7. Bolt
8. Clutch push rod
9. Clutch pedal
10. Pedal pad
11. Stop lamp switch

◆ INSPECTION

Check the following parts, replace if necessary.
1. Worn or damaged bushings.
2. Twisted or bent clutch pedal.
3. Worn or damaged pedal pad.

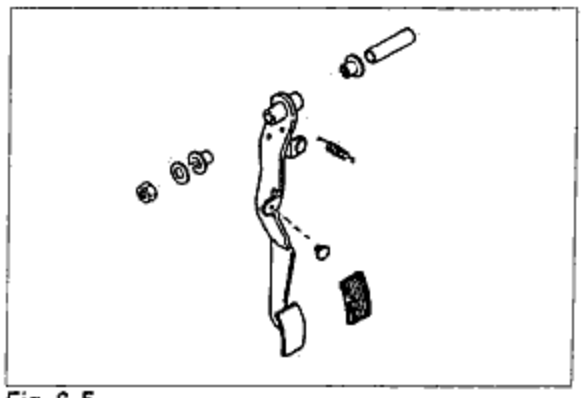

Fig. 6-5

4. Weakened assist spring.

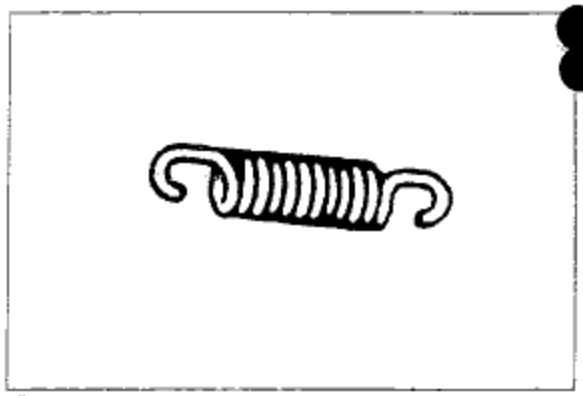

Fig. 6-6

◆ INSTALLATION

1. Install in the reverse order of removal.
2. Apply grease(lithium base, NLGI No. 2) to the bushings and pivot points.
3. Adjust the clutch pedal free play.

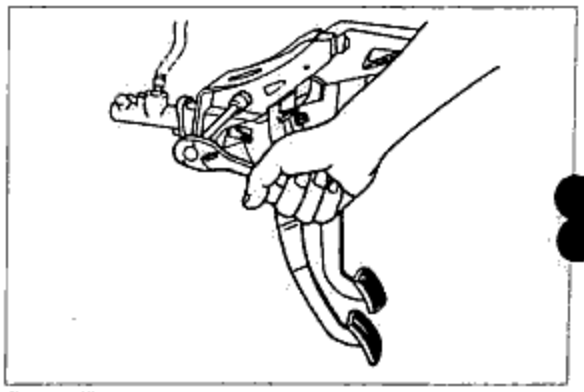

Fig. 6-7

Push rod

Install the push rod.

Tightening torque :
12~17N·m(1.2~1.7kg·m, 9~12ft·lb)

Clutch pedal

Install the clutch pedal.

Tightening torque :
20~34N·m(2.0~3.5kg·m, 14~25ft·lb)

MASTER CYLINDER

REMOVAL

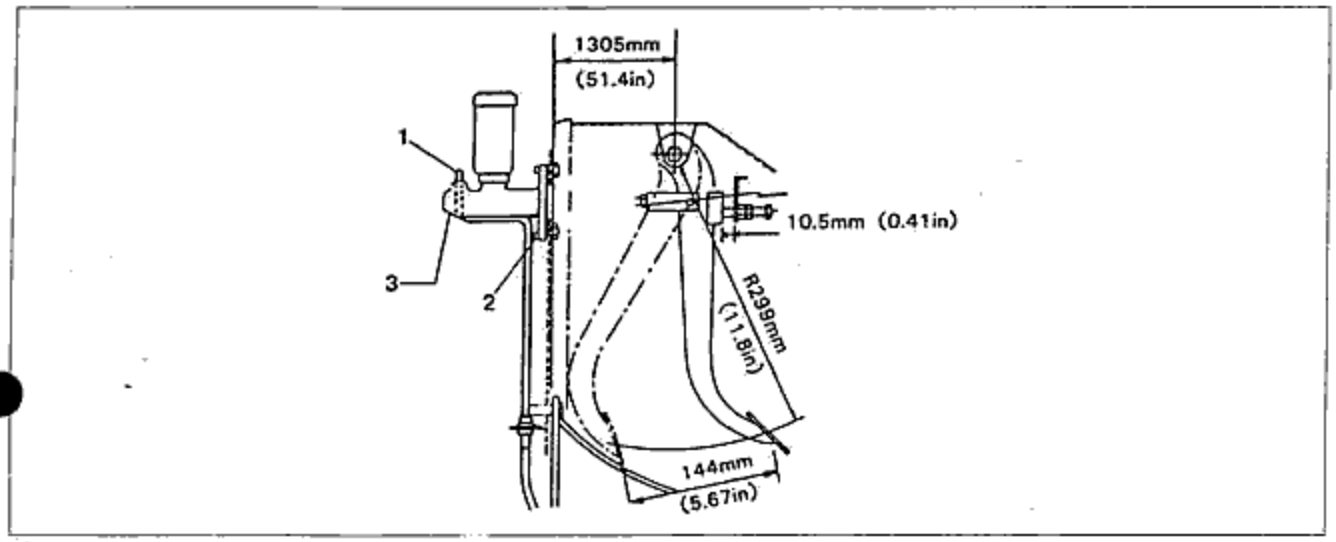

Fig. 6-8

1. Pipe
2. Nut
3. Clutch master cylinder

Clutch pipe

Use SST to disconnect the clutch pipe.

CAUTION

Clutch fluid will damage painted surfaces. Use a container or rags to collect the fluid.
If fluid does get on a painted surface, wipe it off immediately.

Clutch master cylinder

1. Remove the nuts.
2. Remove the clutch master cylinder and gasket.

Reservoir hose

1. Before disconnecting the reservoir hose, use a vessel to remove the fluid from the reservoir.
2. When disconnecting the reservoir hose, use a rag to prevent any remaining fluid from spilling.

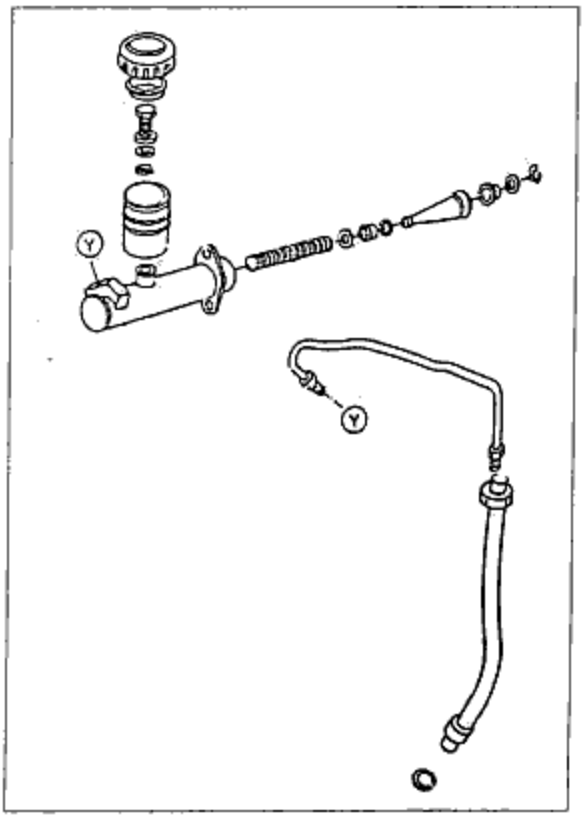

Fig. 6-9

◆ DISASSEMBLY

1. Disassemble in the sequence shown in the figure.
2. Disassemble and assemble in a clean location free from dirt and dust.
3. Use clutch fluid to wash the inner parts.

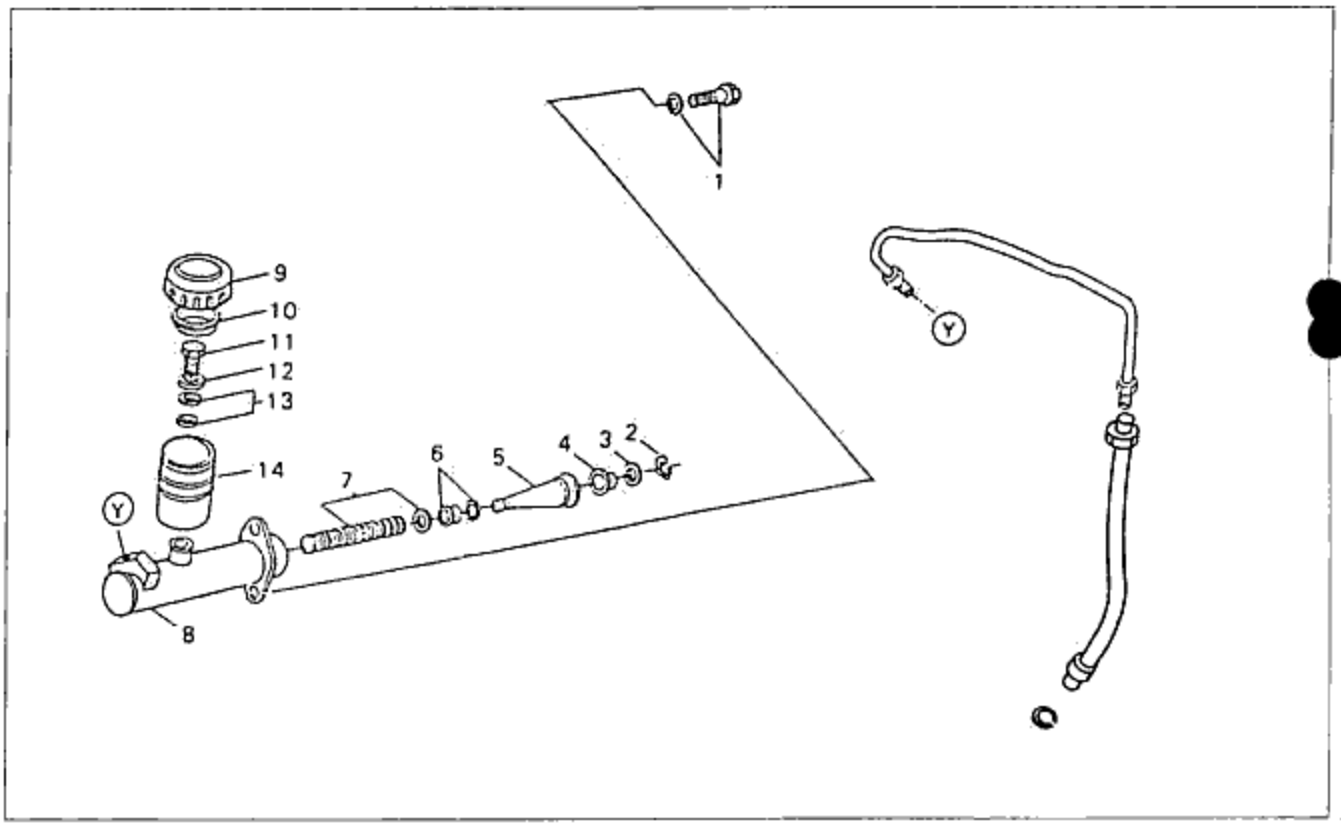

Fig. 6-10

1. Bolt and washer
2. Piston stop wire
3. Washer
4. Secondary piston cup
5. Piston
6. Spacer and primary piston cup
7. Spring Ass'y
8. Master cylinder body
9. Reservoir cap
10. Baffle
11. Plug
12. Washer
13. Spring
14. Reservoir

Snap ring

Press down on the piston and remove the snap ring with snap ring pliers.

NOTE

Do not damage the push rod contact surface of the piston.

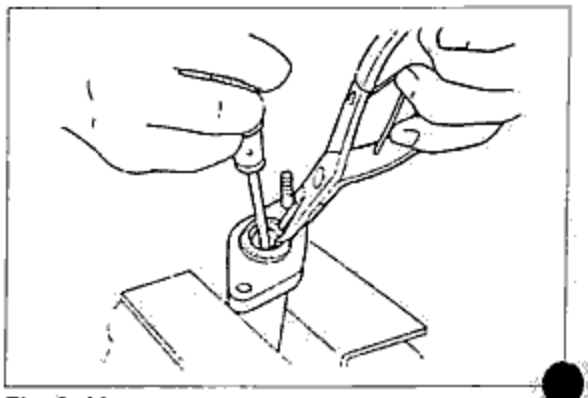

Fig. 6-11

Piston and secondary cup assembly

Remove the piston and secondary cup assembly, spacer, primary cup and return spring using compressed air.

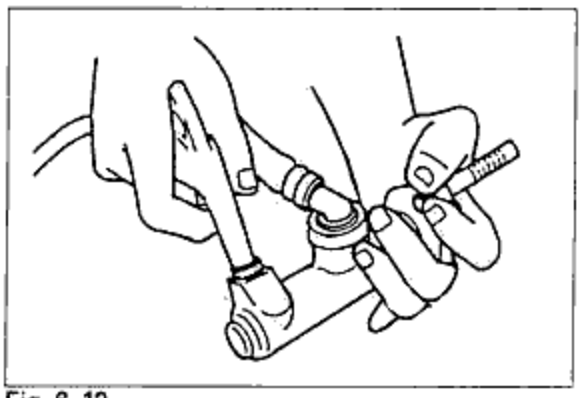

Fig. 6-12

◆ INSPECTION

After cleaning each part, check the following parts, and replace if necessary. Rubber parts should be cleaned with brake fluid.

1. Worn or damaged master cylinder bore and piston.
2. Weakened return spring.
3. Worn or damaged primary or secondary cups.
4. Damaged reservoir and distorted hose connector part.
5. Damaged hose.

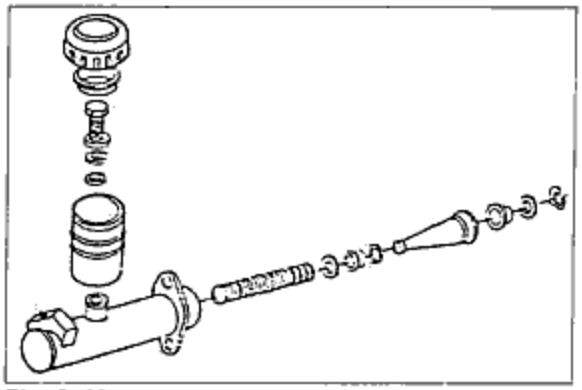

Fig. 6-13

◆ ASSEMBLY

NOTE

- **Before assembling, coat the edges of the piston and cups with clean brake fluid.**
- **After assembling, fill the cylinder with new brake fluid and operate the piston with a screwdriver until fluid is ejected from the outlet.**

1. Installation is the reverse order of removal.

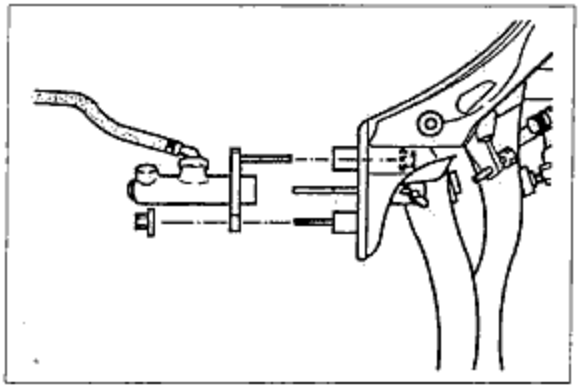

Fig. 6-14

◆ INSTALLATION

Master cylinder

Install a new gasket and the clutch master cylinder.

Tightening torque :
19~26N·m(1.9~2.6kg·m, 14~19ft·lb)

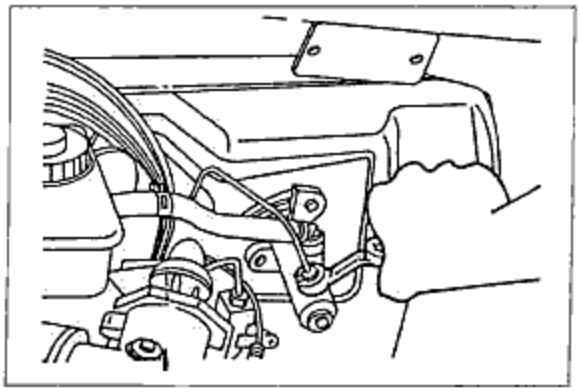

Fig. 6-15

Clutch pipe

Install the clutch pipe to the clutch master cylinder using SST.

Tightening torque :
13~22N·m(1.3~2.2kg·m, 9~16ft·lb)

⊠ RELEASE CYLINDER

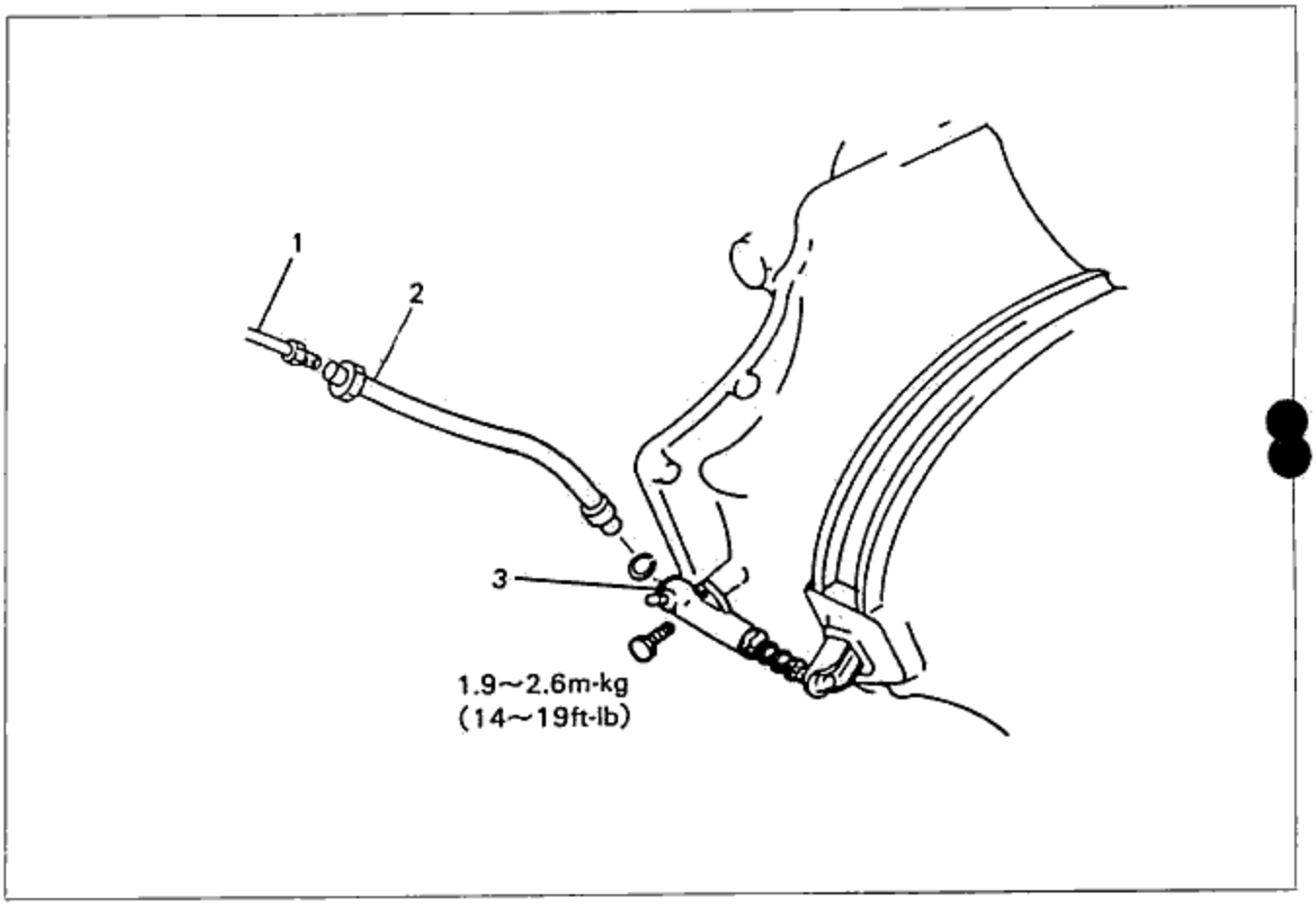

Fig. 6-16

1. Clutch pipe
2. Hose
3. Clutch release cylinder

Flare nut

Use SST(flare nut wrench) to loosen and tighten the flare nut of the clutch pipe.

NOTE

- After disconnecting the clutch pipe, plug it to avoid fluid leakage.
- Clutch fluid will damage painted surfaces.
  Use a container or rags to collect the fluid.
  If fluid does get on a painted surface, wipe it off immediately.
- The flexible hose must not be twisted.

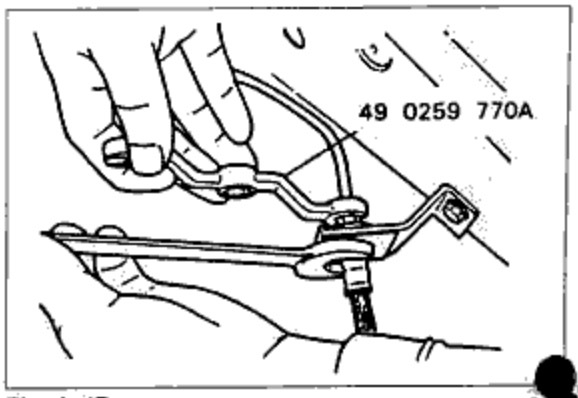

Fig. 6-17

◆ DISASSEMBLY

1. Disassemble in the sequence shown in the figure.
2. Assemble in the reverse order of disassembly.
3. Disassemble and assemble in a clean location free from dirt and dust.
4. Use brake fluid to wash the inner parts.
5. To inspect, refer to master cylinder section.

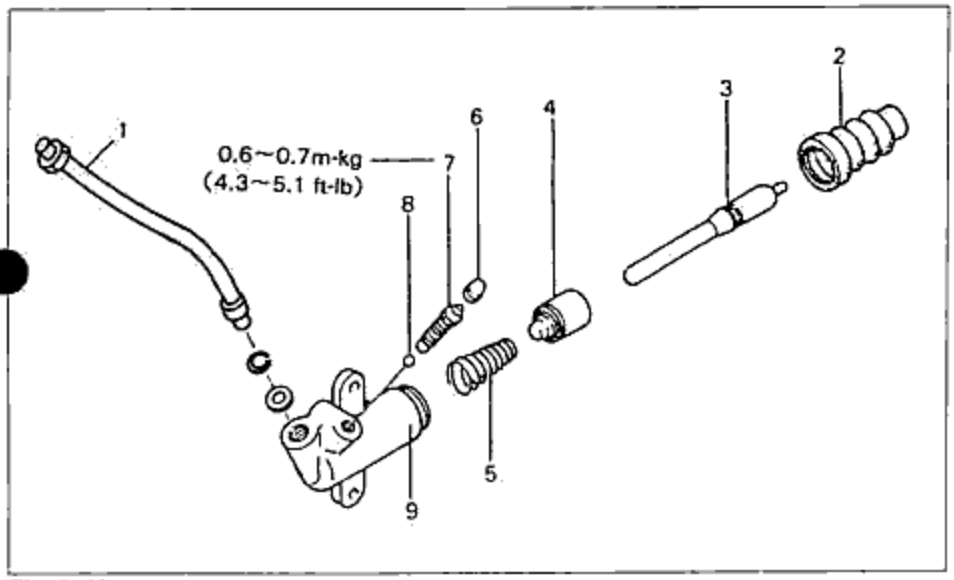

1. Flexible hose
2. Boot
3. Push rod
4. Piston and cap assembly
5. Return spring cylinder
6. Bleeder cap
7. Bleeder screw
8. Steel ball
9. Release cylinder

Fig. 6-18

◆ ASSEMBLY

Flexible hose

Install the flexible hose to the cylinder body.

Tightening torque :
16~23N·m(1.6~2.5kg·m, 12~17ft·lb)

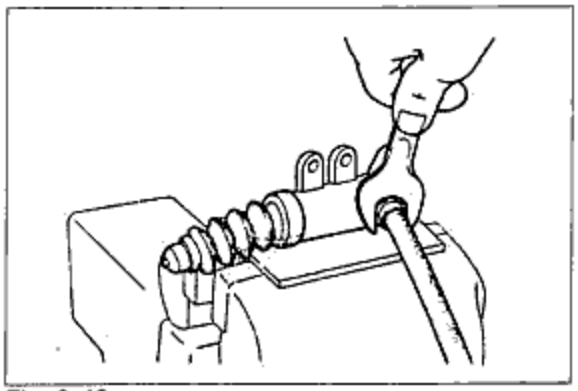

Fig. 6-19

◆ INSTALLATION

Install in the reverse order of removal.

Release cylinder

Install the clutch release cylinder to the transmission case.

Tightening torque :
19~26N·m(1.9~2.6kg·m, 14~19ft·lb)

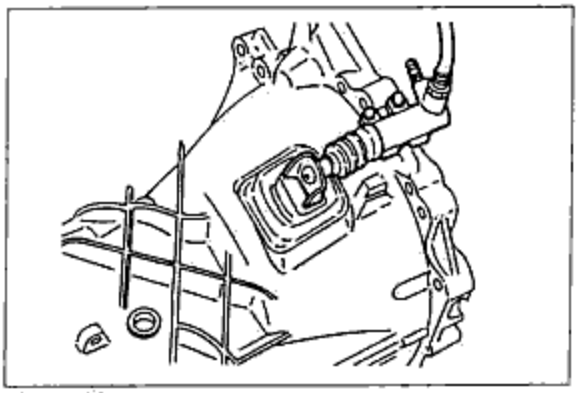

Fig. 6-20

Flare nut

Use SST to tighten the flare nut to the flexible hose.

Tightening torque :
13~22N·m(1.3~2.2kg·m, 9~16ft·lb)

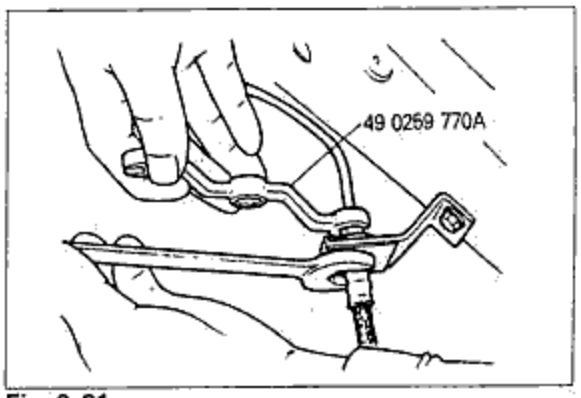

Fig. 6-21

Clip

Insert the clip between the bracket and flare nut of clutch pipe.

CAUTION
- **The hexagon nut must correctly fit into the hexagonal groove of the bracket.**
- **The flexible hose must not be abnormally twisted.**

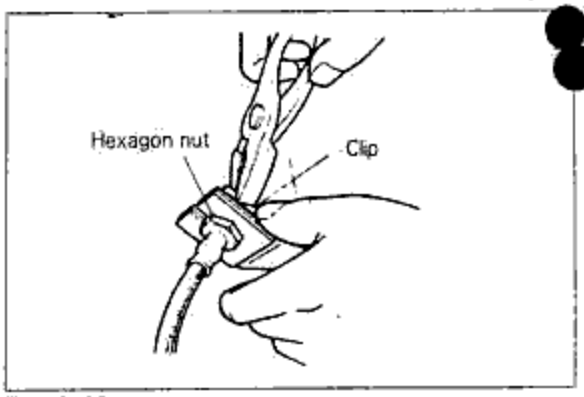

Fig. 6-22

Air bleeding

The clutch hydraulic system must be bled to remove air which enters when the pipes are disconnected for repairs, etc. This bleeding is done as described below.

NOTE
- **The fluid in the reservoir must be maintained at the 3/4 level or higher during air bleeding.**
- **Be careful not to spill clutch fluid on a painted surface.**

1. Remove the bleeder cap and attach a vinyl hose to the bleeder plug.
2. Place the other end of the vinyl hose in a container.
3. Slowly pump the clutch pedal several times.
4. While the clutch pedal is pressed, loosen the bleeder screw using a suitable tool to let fluid and air escape.
   Then tighten the bleeder screw using a suitable tool.
5. Repeat steps 3 and 4 until there are no more air bubbles in the fluid.

   Tightening torque :
   5.8~7.5N·m(0.6~0.9kg·m, 4.3~6.5ft·lb)
6. Check for correct clutch operation.

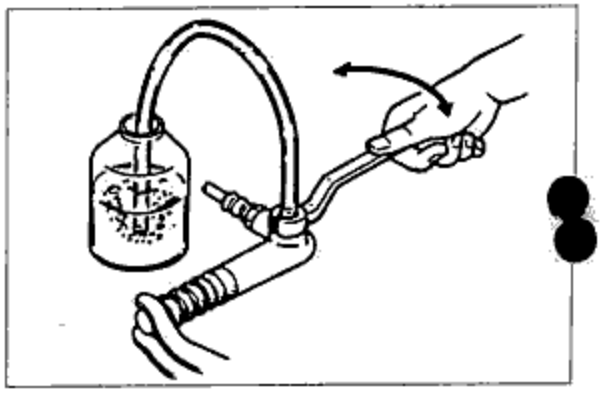
Fig. 6-23

⊠ CLUTCH AND FLYWHEEL

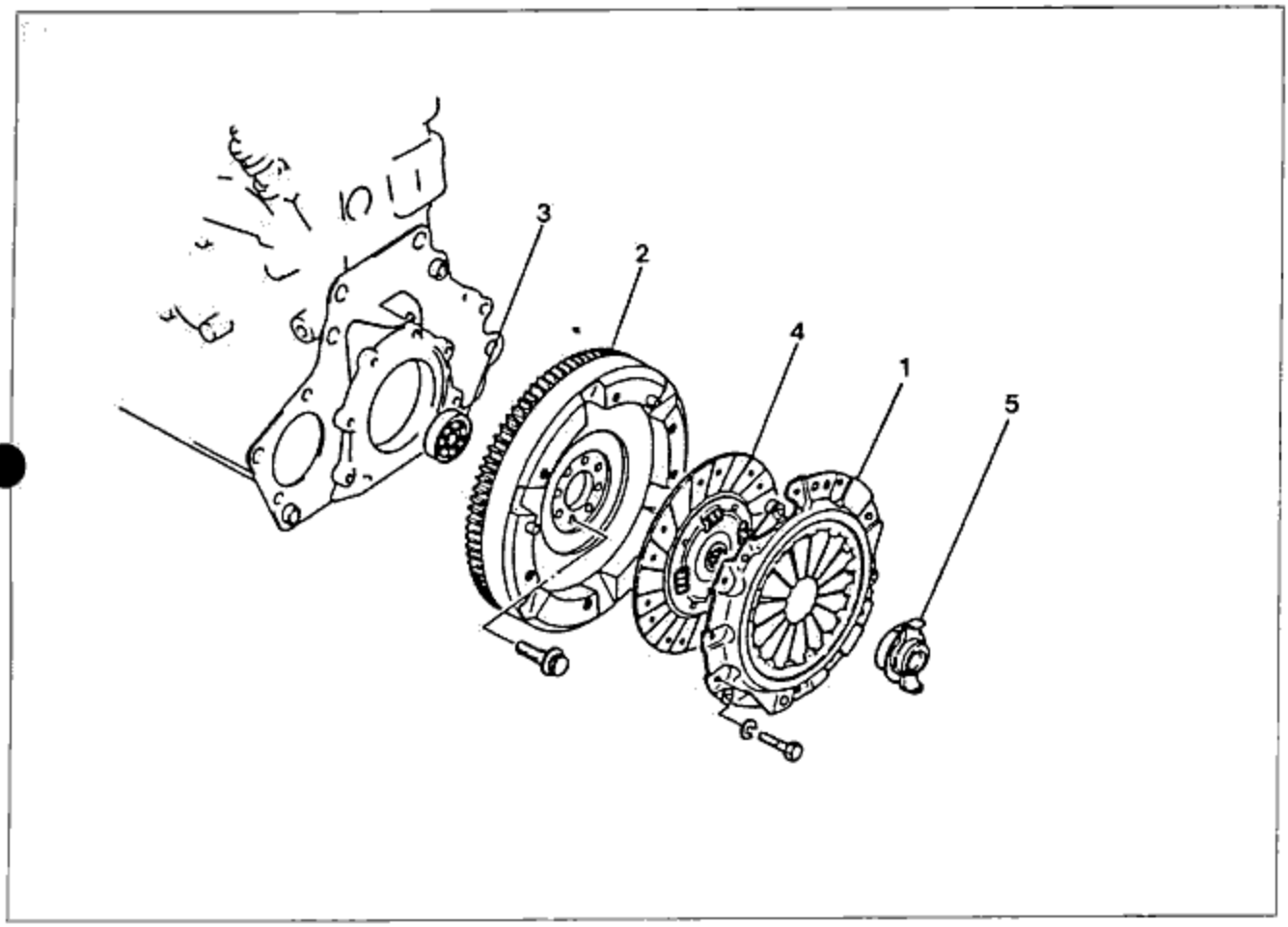

Fig. 6-24

1. Clutch cover
2. Flywheel
3. Pilot bearing
4. Clutch disc
5. Clutch release bearing

◆ REMOVAL

Clutch cover

Attaching the clutch disc center tool(49 SE01 310) and the ring gear brake(49 V101 060) loosen the clutch cover mounting bolts.

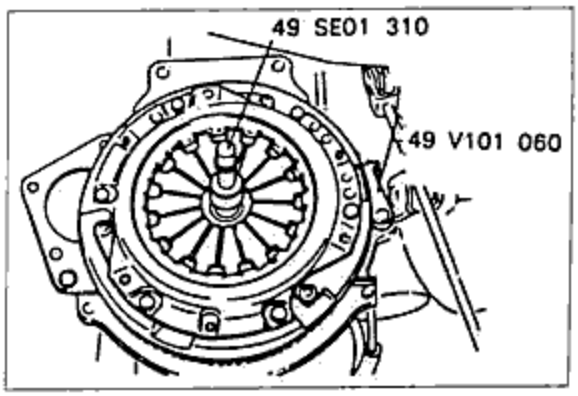

Fig. 6-25

Flywheel

Remove the flywheel using SST.

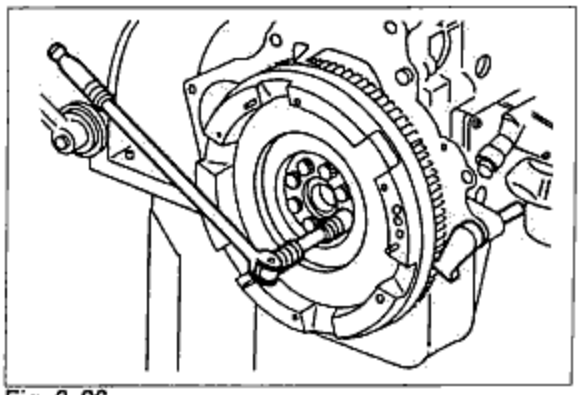

Fig. 6-26

Pilot bearing

Remove the pilot bearing from the crankshaft by using the needle bearing puller (49 1285 071).

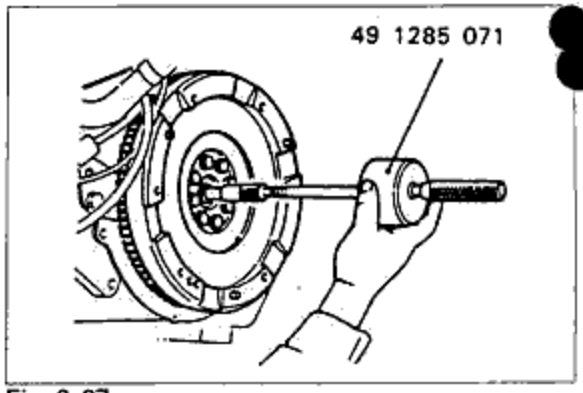

Fig. 6-27

◆ INSPECTION

Check the following parts, repair or replace if necessary.

Clutch cover

1. Contact surface of the clutch disc for scoring, cracks, or discoloration.

NOTE

- **Minor scoring or discoloration should be removed with emery paper.**

2. Diaphragm spring for damage, or damage to the cover.

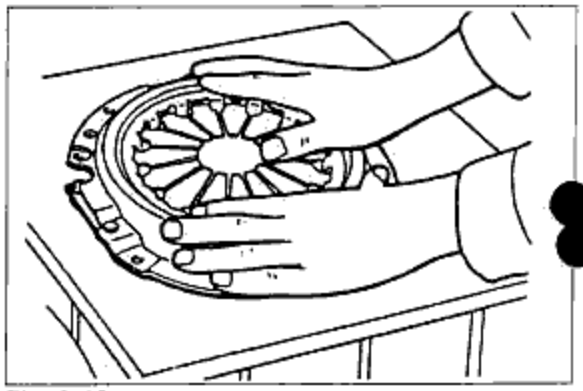

Fig. 6-28

Clutch disc

1. Facing surface for hardening or oil contamination.

NOTE

- **Use sandpaper if the trouble is minor.**

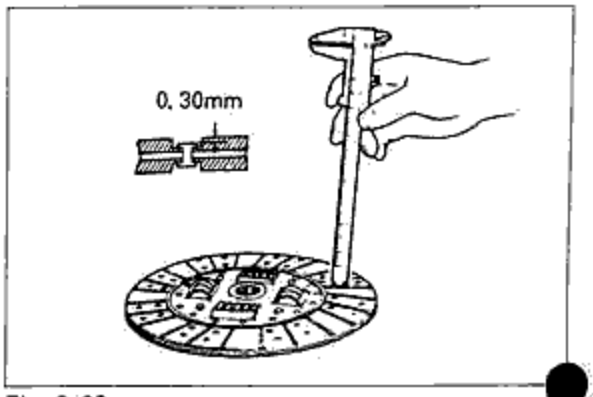

Fig. 6-29

2. Loose facing rivets.
3. Worn clutch disc.
   Measure the depth to the rivet heads with a slide caliper.

   Minimum : 0.3mm(0.012 in)

4. Runout of clutch disc.

   Lateral runout maximum : 0.7mm(0.027 in)
   Vertical runout maximum : 1.0mm(0.039 in)

5. Wear or rust on the splines.
   Remove any minor rust.

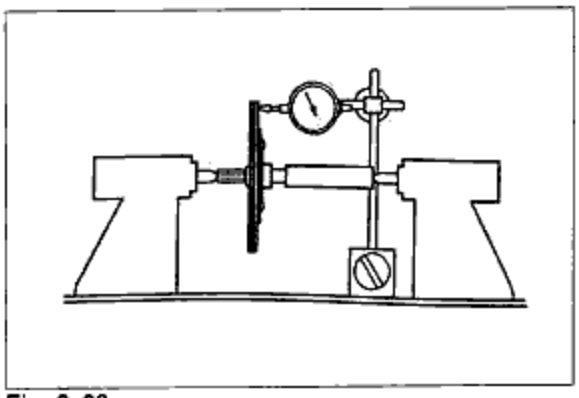

Fig. 6-30

Clutch release bearing

1. Turn the bearing both directions and check for any binding or abnormal noise.
2. Worn or damaged diaphragm spring or release fork contact surface.

NOTE

- **The clutch release bearing is a sealed bearing and must not be washed.**

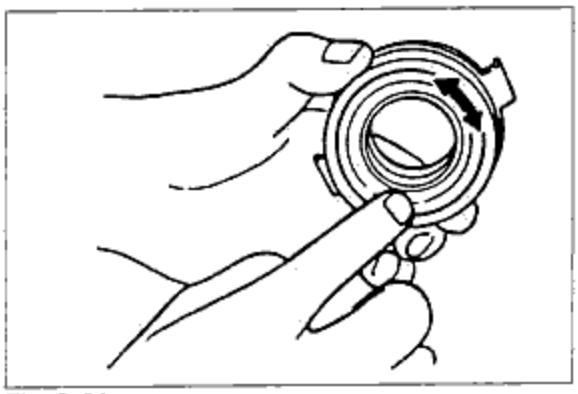

Fig. 6-31

3. Sliding condition of bearing
   Install the bearing on the clutch housing extension and check for smooth movement.

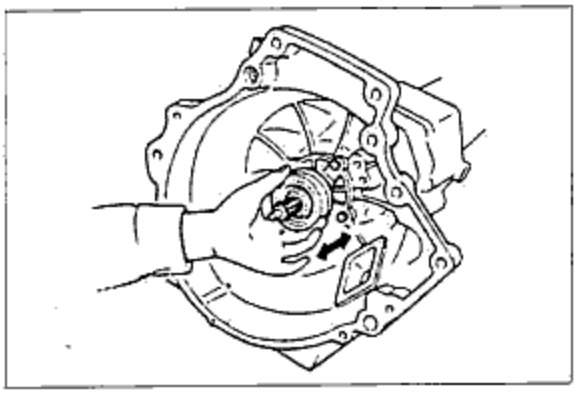

Fig. 6-32

Flywheel

1. Surface cracks scoring or discoloration of clutch contact surface.

NOTE

- **If the problem is minor, repairs can be made by cleaning with emery paper.**

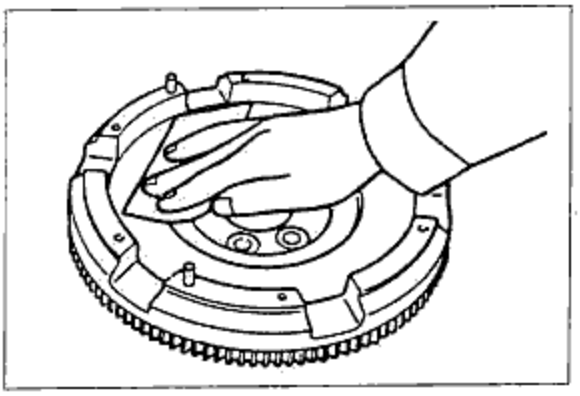

Fig. 6-33

2. Damaged or worn ring gear teeth.
   If necessary, replace the ring gear as follows.
   (1) Heat the ring gear with a blowtorch, then tap around the gear to remove it from the flywheel.
   (2) Heat the new ring gear to 250~300℃(480~570°F), then fit it onto the flywheel.

NOTE
- **The bevelled side of the ring gear must face toward the engine side.**

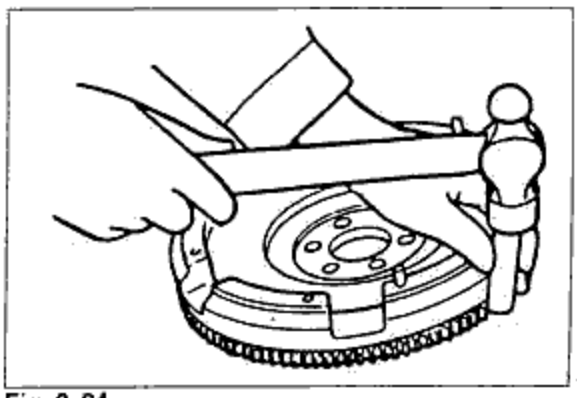
Fig. 6-34

3. Runout of flywheel.
   (1) To measure, position the dial gauge feeler on the clutch disc contact surface, then turn the flywheel.

   Runout maximum : 0.2mm(0.008 in)

   (2) If the runout exceeds specification, repair by grinding.

   Grinding limit : 0.5mm(0.020 in)

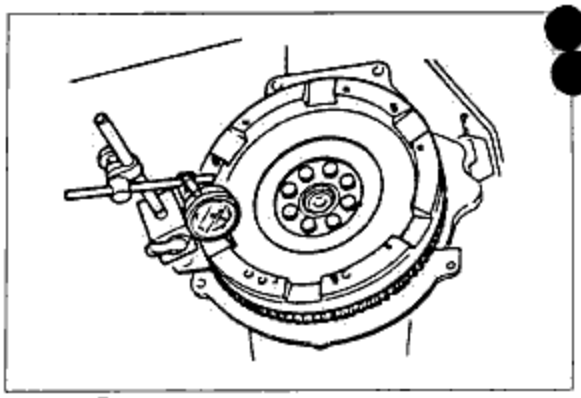
Fig. 6-35

Pilot bearing

Turn the bearing by hand while applying force in the rotating direction. Replace the pilot bearing if necessary.

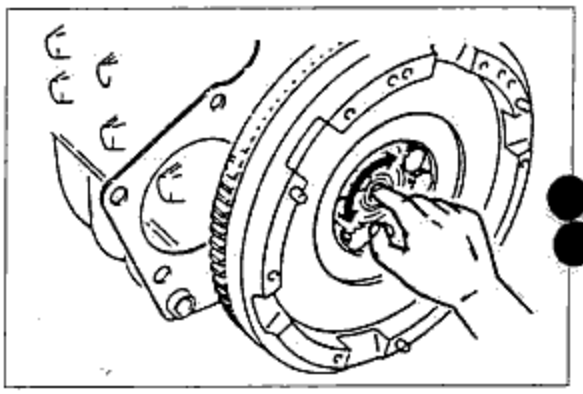
Fig. 6-36

◆ INSTALLATION

Install in the reverse order of removal.

Pilot bearing

1. Coat the bearing with grease(lithium base, NLGI No. 2).
2. Install the pilot bearing using SST.
3. Install the clutch cover and the clutch disc.

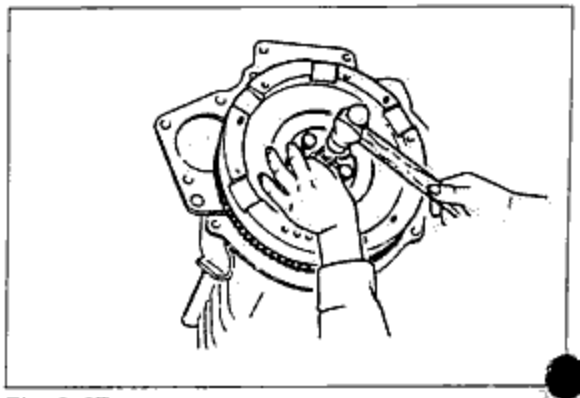
Fig. 6-37

Flywheel

1. Install the flywheel using SST.

   Tightening torque :
   176~186N·m(18.0~19.0kg·m, 130~137ft·lb)

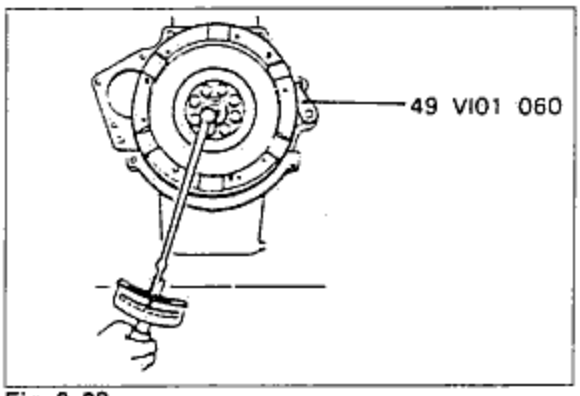

Fig. 6-38

Clutch disc

- Clean the clutch disc splines and primary shaft splines, then apply clutch grease(Mori White TA No. 2 or equivalent organic molybdenum grease).

2. Install the clutch disc using SST.

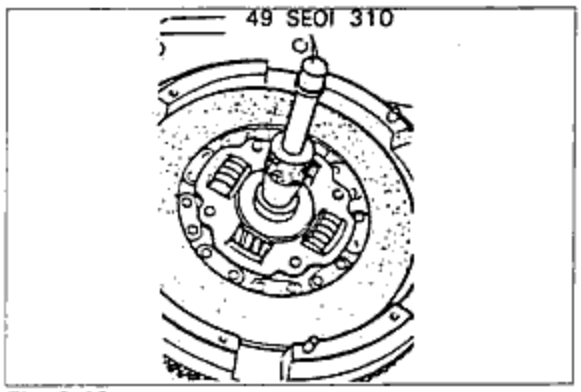

Fig. 6-39

Clutch cover

Install the clutch cover using SST.

Tightening torque :
18~26N·m(1.8~2.7kg·m, 13~20ft·lb)

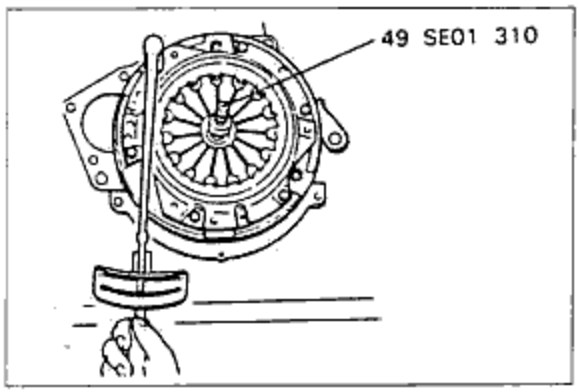

Fig. 6-40

Release bearing

Apply clutch grease(Mori White TA No. 2 or equivalent organic molybdenum grease) to the shaded areas of the release bearing.

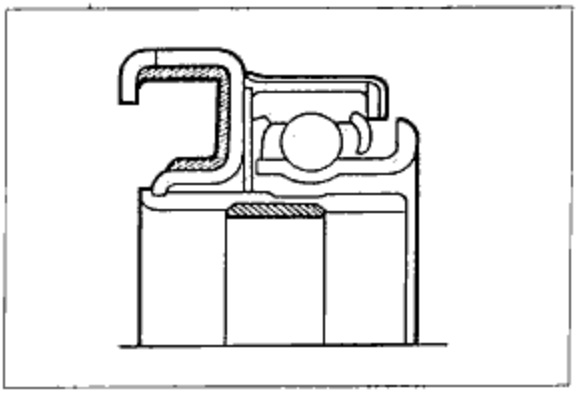

Fig. 6-41

TRANSMISSION 7

OUTLINE ..... 7—2
- CONSTRUCTION ..... 7—2

SPECIFICATIONS ..... 7—3

TROUBLESHOOTING GUIDE ..... 7—3

INSPECTION ..... 7—4

REMOVAL OF TRANSMISSION ASSEMBLY ..... 7—5

INSTALLATION OF TRANSMISSION ASSEMBLY ..... 7—6

CLUTCH HOUSING ASSEMBLY ..... 7—7
- DISASSEMBLY ..... 7—7
- INSPECTION ..... 7—7
- ASSEMBLY ..... 7—7

CONTROL CASE ASSEMBLY ..... 7—8
- DISASSEMBLY ..... 7—8
- INSPECTION ..... 7—8
- ASSEMBLY ..... 7—8

EXTENSION HOUSING ASSEMBLY ..... 7—9
- DISASSEMBLY ..... 7—9
- INSPECTION ..... 7—9
- ASSEMBLY ..... 7—9

TRANSMISSION CASE ASSEMBLY 7—10
- DISASSEMBLY ..... 7—10
- INSPECTION ..... 7—11

MAIN DRIVE SHAFT ASSEMBLY ..... 7—12
- DISASSEMBLY ..... 7—12
- INSPECTION ..... 7—13

ASSEMBLY OF TRANSMISSION ASSEMBLY ..... 7—14

TRANSFER ASSEMBLY ..... 7—18
- REMOVAL ..... 7—18

FRONT & REAR COVER (ONLY INDIRECT TYPE TRANSFER) ..... 7—19
- REMOVAL AND DISASSEMBLY ..... 7—19
- INSPECTION ..... 7—19
- ASSEMBLY ..... 7—19

REAR CASE ASSEMBLY ..... 7—20
- DISASSEMBLY ..... 7—20
- INSPECTION ..... 7—20
- ASSEMBLY ..... 7—20

FRONT CASE, MAIN SHAFT AND IDLE GEAR ASSEMBLY ..... 7—21
- REMOVAL AND DISASSEMBLY ..... 7—21
- INSPECTION ..... 7—21
- ASSEMBLY ..... 7—21

ASSEMBLY OF TRANSFER ASSEMBLY ..... 7—22

◇ OUTLINE

◆ CONSTRUCTION

1. This is the floor type of forward 5th and reverse 1st.
2. The shift mesh of three rail being selected, so this is the advanced gear shift system.
3. The reverse locker is selected to prevent the wrong operation of reverse gear during the gear shifting.

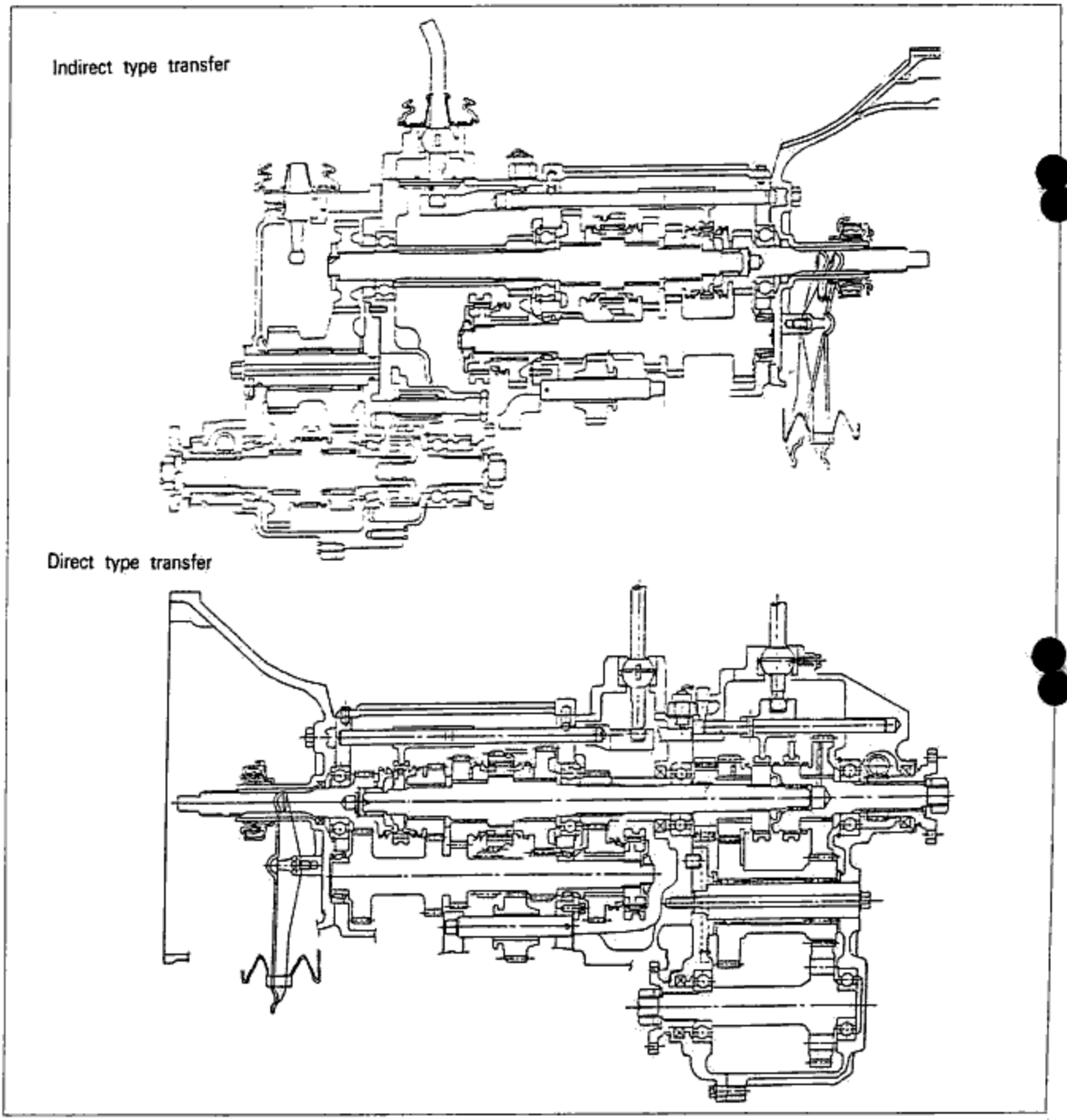

Fig. 7-1

SPECIFICATIONS

Transmission	Number of speed		Forward : 5th, Reverse : 1st
	Type		Forward : synchromesh, Reverse : slidingmesh
	Shift type		Floor type
	Gear ratio	1st	3.565
		2nd	2.212
		3nd	1.435
		4th	1.000
		5th	0.894
		Rev.	3.854
Transfer	Gear ratio	High	1.000
		Low	2.203
Oil		Type	API service GL-4 All season type : SAE80W-90
		Capacity	Transmission : 1.9 ℓ, Transfer : 1.3 ℓ
Grease			SAE #80
Sealant			SILASTIC RTV732 SEALER, TB1104 THREE BOND, SILMATE RTV #1473

TROUBLESHOOTING GUIDE

Problem	Possible cause	Correction
Abnormal noise The noise can be considered to be from the transmission if the noise is heard with the vehicle stopped and the engine idling, and then disappears when the clutch pedal is depressed, or if the noise is heard when the transmission is shifted.	· Insufficient oil	· Add oil
	· Deterioration of oil quality	· Replace with oil of specified quality
	· Worn bearing	· Adjust or replace
	· Wear of sliding surfaces of counter shaft gear	· Replace
	· Wear of sliding surfaces of gears	· Replace
	· Excessive gear backlash	· Replace
	· Damaged gear teeth	· Replace
Difficult to shift Check by shifting up and shifting down while driving. Then stop the engine and check and shifting. If a gear cannot be shifted into, the problem can be considered to be a malfunction related to transmission control.	· Bent control rod	· Replace
	· No grease in transmission control system	· Lubricate with grease
	· Insufficient oil	· Add oil
	· Deterioration of oil quality	· Replace with oil of specified quality
	· Wear or play of shift fork or shift rod	· Replace
	· Wear of synchronizer ring	· Replace
	· Wear of synchronizer cone of gear	· Replace
	· Bad contact of synchronizer ring and cone of gear	· Replace
	· Excessive longitudinal play of gears	· Replace
	· Wear of bearing	· Adjust or replace
	· Wear of synchronizer key spring	· Replace
	· Improper disengagement of clutch	· Refer to Section 6

Problem	Possible cause	Correction
Jumps out of gear (to neutral) After determining which gear returns to neutral, first check the parts related to transmission control. Then remove the transmission from the vehicle and check the inside of the transmission.	· Bent control rod · Weak or broken lock ball spring · Wear of shift fork · Wear of clutch hub · Wear of clutch hub sleeve · Wear of gear sliding parts · Excessive gear backlash · Wear of bearing · Incorrect (loose) installation of engine mounts or transmission mounts	· Replace · Replace · Replace · Replace · Replace · Replace · Replace · Adjust or replace · Tighten
Rough or difficult operation of gear-shift lever	· Sticking of control rod · Malfunction of ball joint of change rod · Bent control rod	· Replace · Replace · Replace

⊠ INSPECTION

Checking transmission and transfer oil level.

1. Remove the plug of oil supply port.
2. Check whether the oil level is near the port.
3. If the level is low, add oil of the specified quality.

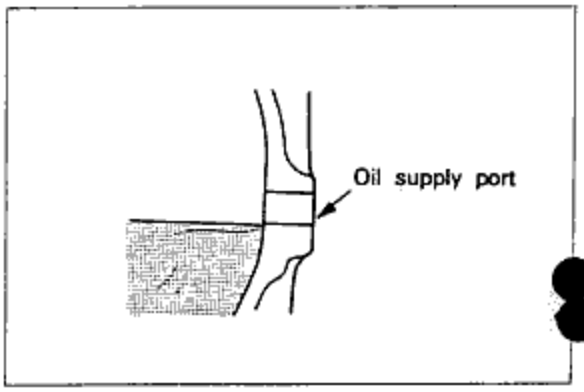

Fig. 7-2

⊠ REMOVAL OF TRANSMISSION ASSEMBLY

1. Raise the vehicle and support it with safety stand.
2. Drain the transmission oil to the suitable container from the transmission and transfer, and then support the transmission with jack.
3. Remove the clutch release cylinder, starter motor and propeller shaft.
4. Remove the speedometer cable, 4×4 switch and back up lamp switch.
5. Remove the cross member, transmission mounting rubber, gear shift knob and boot.
6. Remove the mounting bolt, nut and spring washer of the clutch housing and engine.

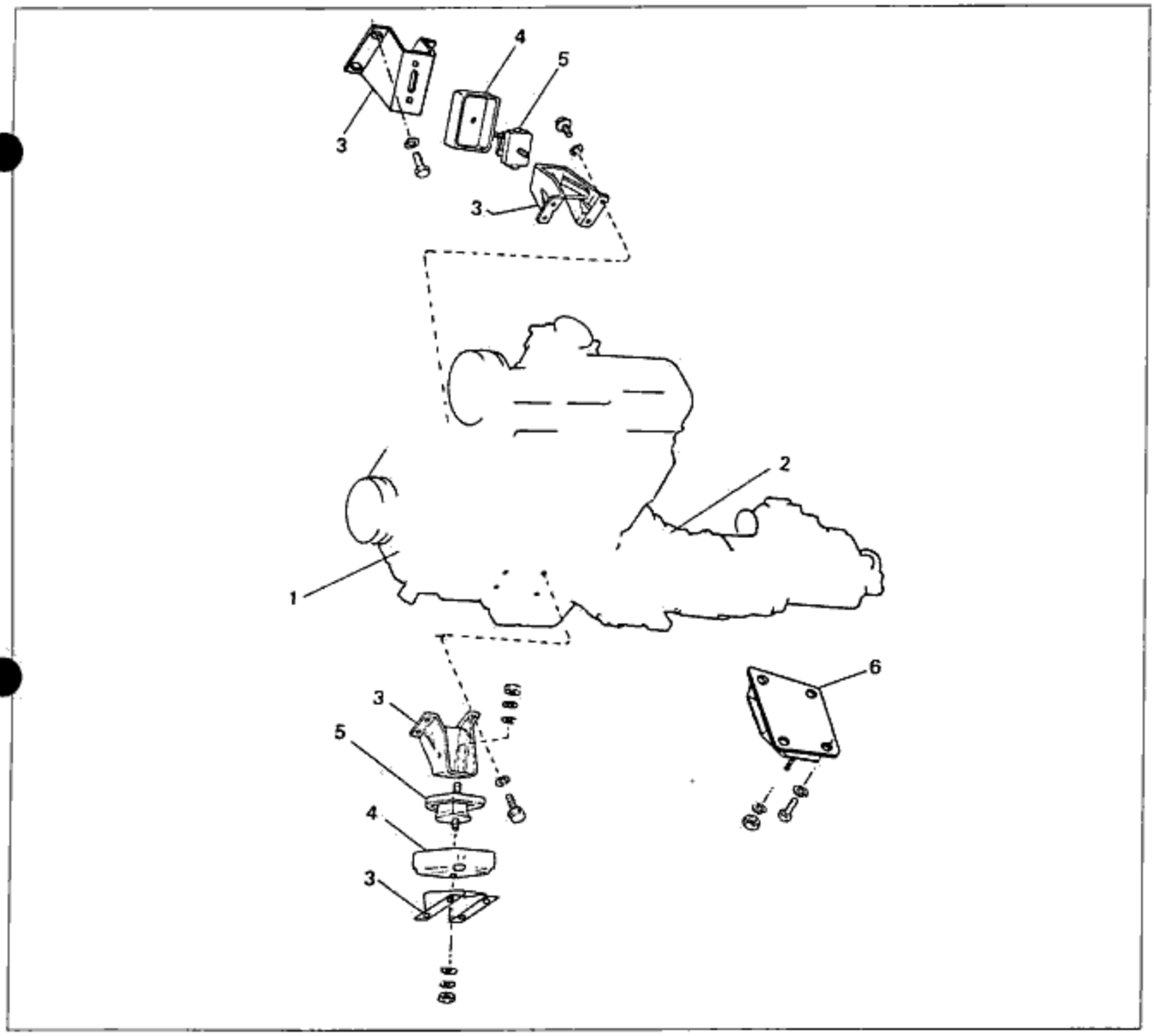

Fig. 7-3

1. Engine ASS'Y
2. Transmission and transfer ASS'Y
3. Engine mounting bracket
4. Stopper case
5. Engine mounting rubber
6. Transmission mounting rubber

⊠ INSTALLATION OF TRANSMISSION ASSEMBLY

Installation is the reverse order of removal and use the suitable bolt while the clutch housing is installed to the engine.

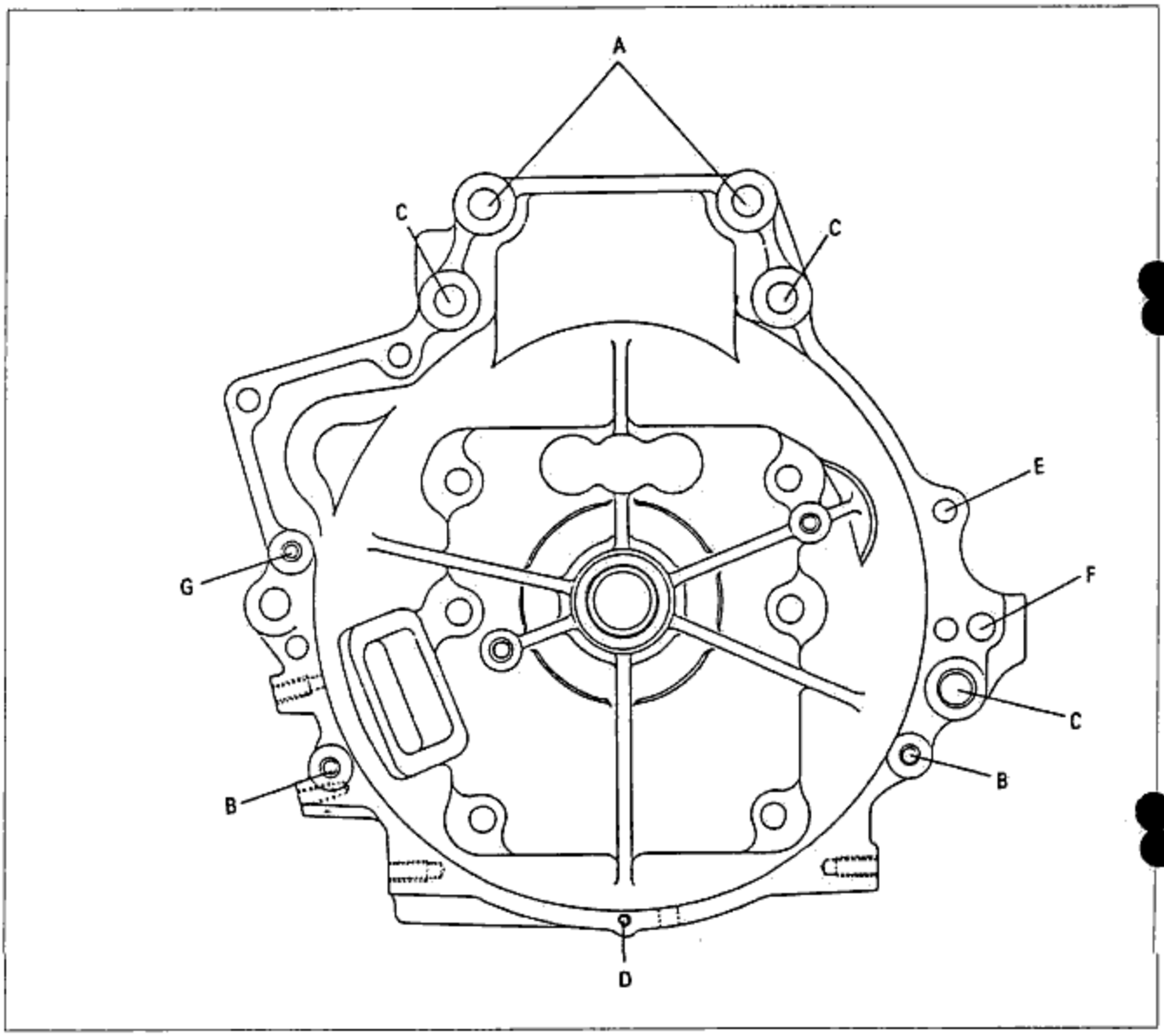

Fig. 7-4

Position	Tightening bolt	Tightening torque m·kg(ft·lb)
A	Bolt(M14), L:50mm(1.969in)	11~15(80~108)
B	Bolt(M10), L:20mm(0.787in)	3.8~5(27.5~36)
C	Bolt(M14), L:15mm(0.591in)	11~15(80~108)
D	Bolt(M6), L:10mm(0.394in)	0.83~1.1(2.7~8)
E	Bolt(M14), L:85mm(3.346in)	11~15(80~108)
F	Bolt(M10), L:50mm(1.969in)	3.8~5(27.5~36)
G	Bolt(M14), L:75mm(2.953in)	11~15(80~108)

CLUTCH HOUSING ASSEMBLY

DISASSEMBLY

Disassemble each part in the numbered order shown in the figure.

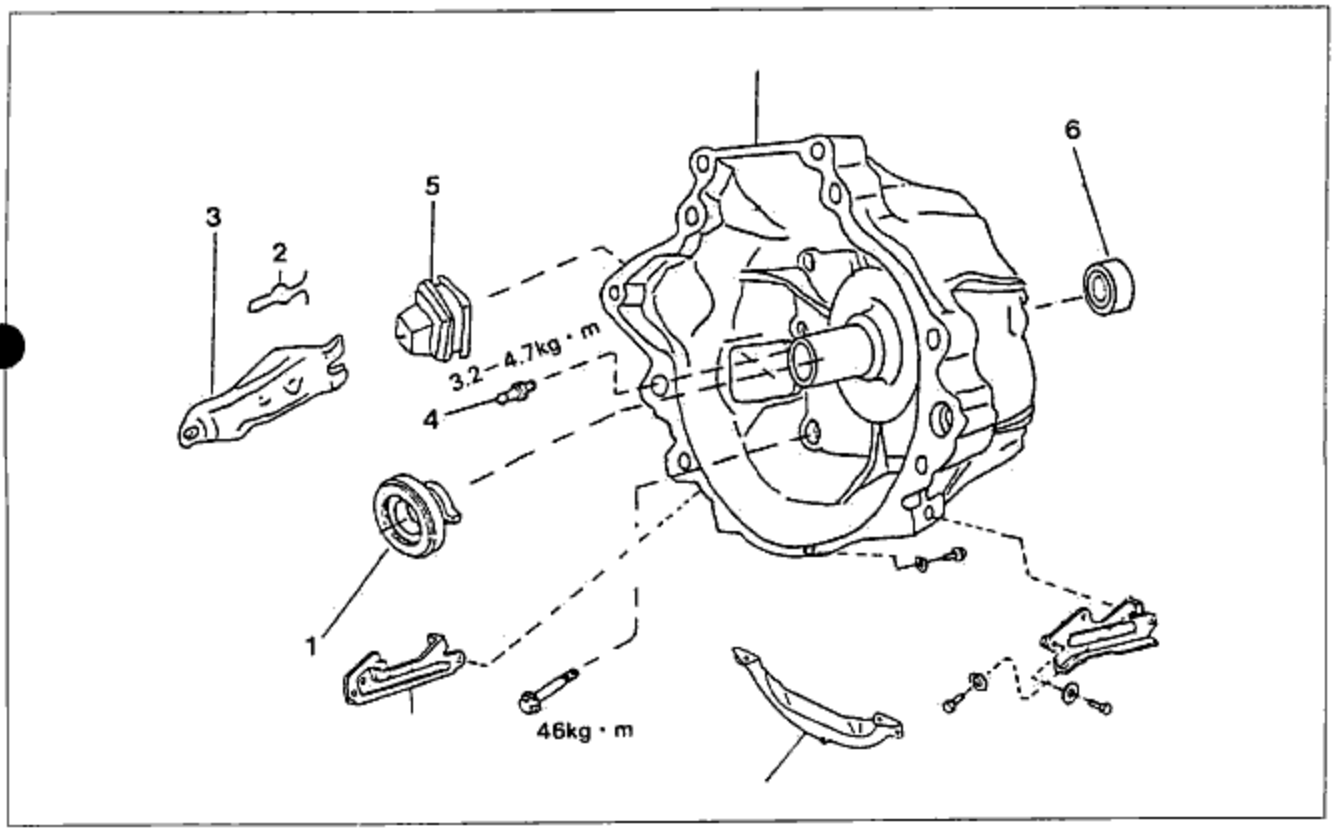

Fig. 7-5

1. Clutch release collar
2. Support fork
3. Clutch release fork
4. Pivot pin
5. Dust cover
6. Oil seal
7. Plate gusset
8. Undercover
9. Clutch housing

INSPECTION

1. Cracks or damage of the oil seal and dust cover.
2. Cracks or damage of the clutch housing.

ASSEMBLY

1. Assembly is in the reverse order of removal.
2. When replacing the oil seal, attend to the direction of the oil seal and install to the clutch housing, and then apply the oil onto the oil seal rib.

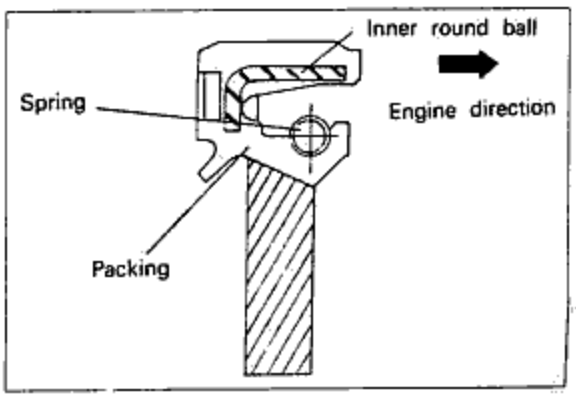

Fig. 7-6

⊠ CONTROL CASE ASSEMBLY

◈ DISASSEMBLY

Disassemble each part in the numbered order shown in the figure.

CAUTION

- Don't disassemble the reverse locker assembly.

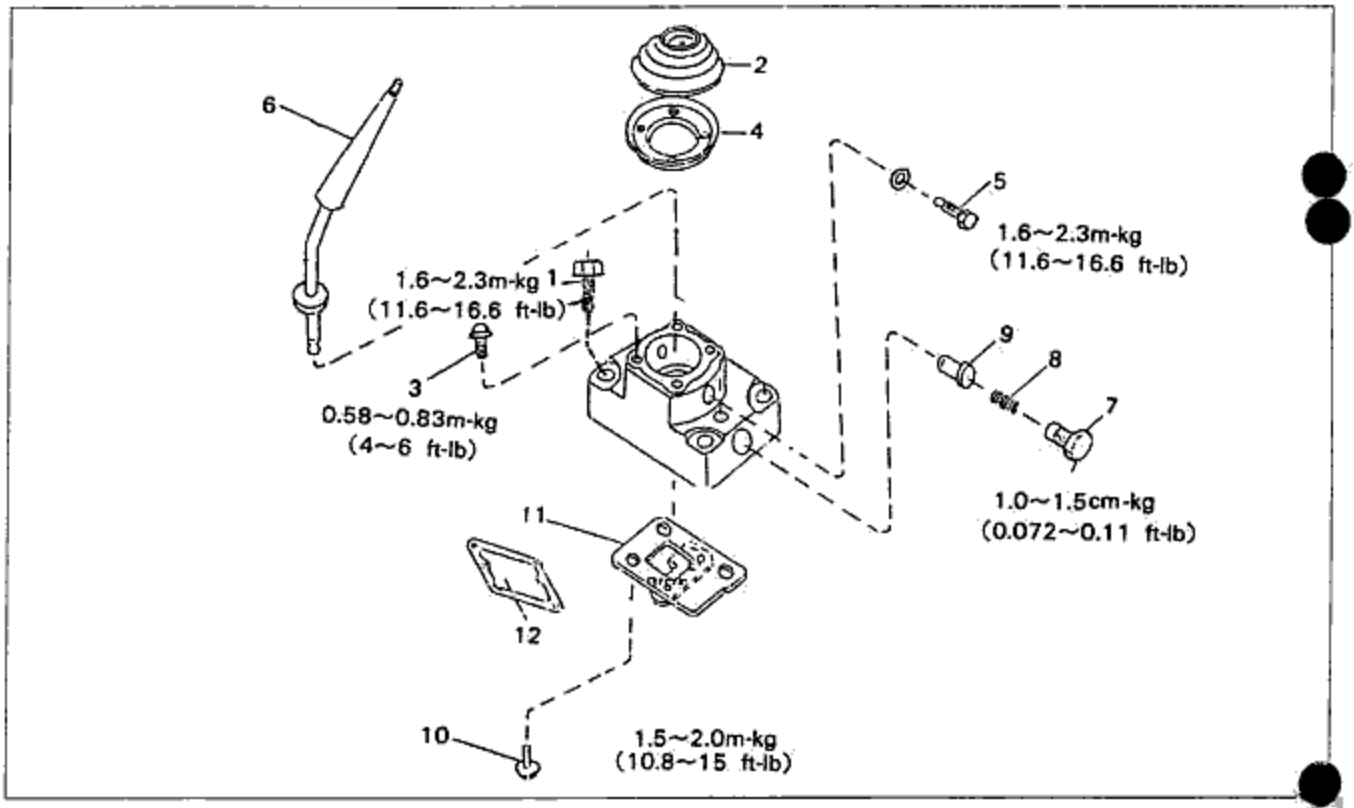

Fig. 7-7

1. Bolt
2. Boot
3. Bolt
4. Cover plate
5. Bolt
6. Change lever
7. Spring cap
8. Spring
9. Select spindle
10. Bolt
11. Reverse locker ASS'Y
12. Gasket

◈ INSPECTION

1. Cracks or damage of the boot
2. Crush of the cover plate
3. Bend of the change lever

◈ ASSEMBLY

1. Assembly is the reverse order of removal, and tighten the bolt to specified torque.

EXTENSION HOUSING ASSEMBLY

DISASSEMBLY

Disassemble each part in the numbered order shown in the figure, be careful about the following items.

1. Raise and stand caulking before removing the lock nut.
2. Don't reuse the removed lock nut.
3. When clamp by vice, use metalic pieces.
4. When removing the top cover, a spring shouldn't be put into the transmission case.
5. When removing the bearing, use the bearing puller set(49 0839 425C).

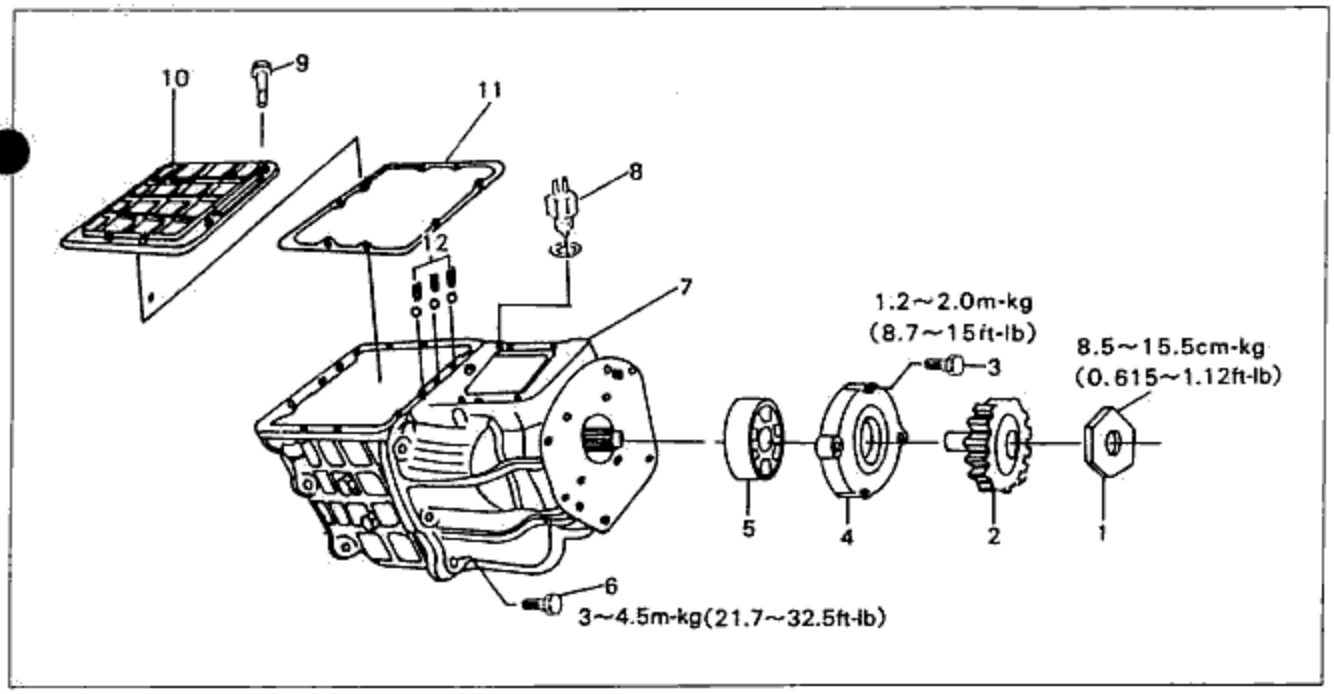

Fig. 7-8

1. Lock nut	4. Bearing cover	7. Extension housing	10. Top cover
2. Transfer drive gear	5. Bearing	8. Back up lamp switch	11. Gasket
3. Bolt	6. Bolt	9. Bolt	12. Steel ball & spring

INSPECTION

1. Noise, damage and wear during turning the bearing
2. Damage or cracks of the extension housing

ASSEMBLY

1. Assembly is the reverse order of removal, be careful about the direction when assembling the oil seal set on the transfer driver gear and bearing cover.
2. After assembling the oil seal on the bearing cover, and apply oil.

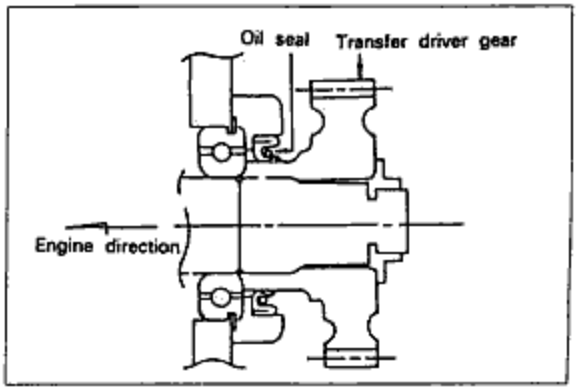

Fig. 7-9

⊠ TRANSMISSION CASE ASSEMBLY

◈ DISASSEMBLY

Disassemble each part in the numbered order shown in the figure, be careful about the following items;

(1) Raise and stand caulking before removing the lock nut.
(2) Don't reuse the removed lock nut.
(3) When clamp with vice, use metallic pieces.
(4) Remove at the center position when removing each stage shift rod.

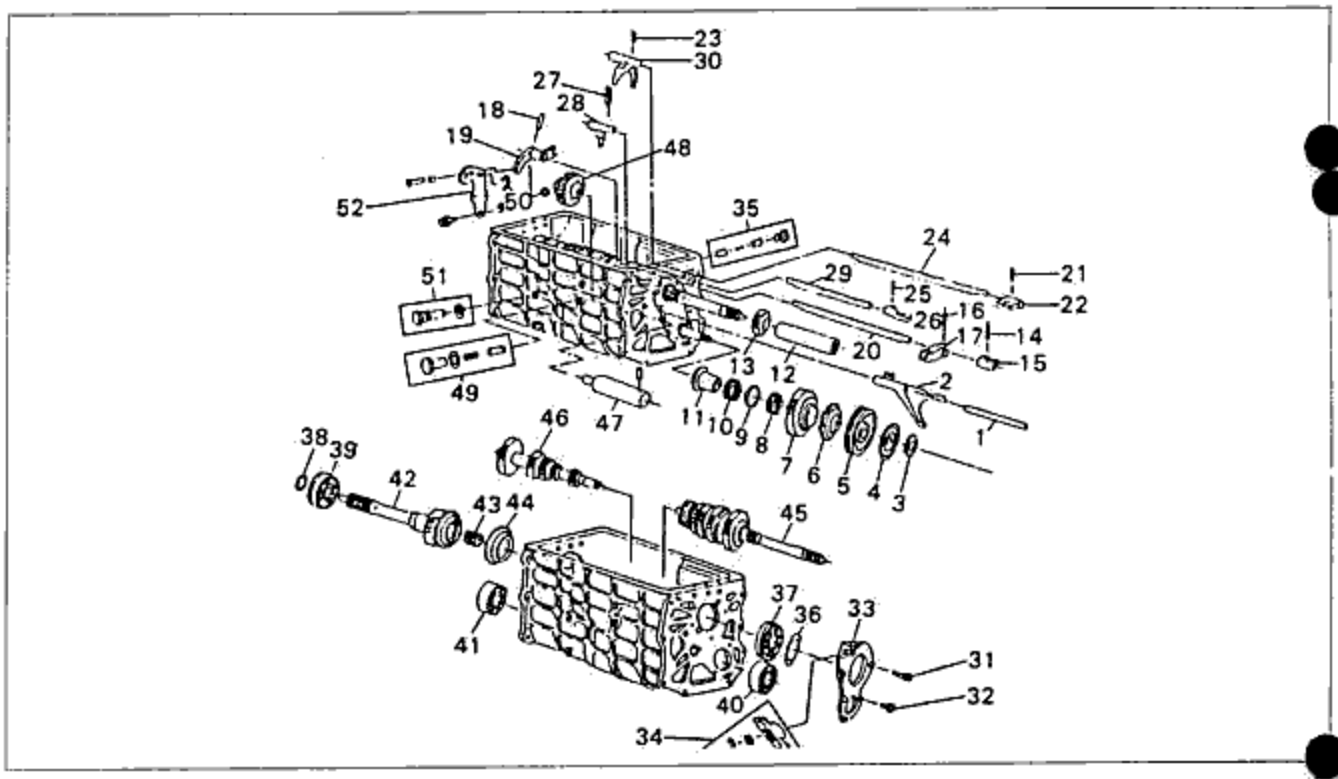

Fig. 7-10

1. 5th shift rod
2. 5th shift fork
3. Lock nut
4. Lock plate
5. Sleeve hub ASS'Y
6. 5th synchronizer ring
7. Counter 5th gear
8. Needle bearing
9. Spacer
10. Needle bearing
11. Gear sleeve
12. Spacer
13. 5th gear
14. Spring pin
15. 5th shift end
16. Spring pin
17. Crank shift end
18. Spring pin
19. Reverse fork ASS'Y
20. 5th, reverse shift rod
21. Spring pin
22. 1st, 2nd shift end
23. Spring pin
24. 1st, 2nd shift rod
25. Spring pin
26. 3rd, 4th shift end
27. Spring pin
28. 3rd, 4th fork
29. 3rd, 4th shift rod
30. 1st, 2nd shift fork
31. Bolt
32. Bolt
33. Bearing cover
34. Crank lever ASS'Y
35. Inter lock pin & plug
36. Shim
37. Bearing
38. Snap ring
39. Bearing
40. Bearing
41. Bearing
42. Main drive gear
43. Needle bearing
44. 4th synchronizer ring
45. Main shaft ASS'Y
46. Counter shaft
47. Reverse idle shaft & pin
48. Reverse idle gear
49. Reverse stopper ASS'Y
50. Snap ring
51. Bolt & washer
52. Reverse lever ASS'Y

◆ INSPECTION

Check each part for the items listed below. Repair or replace if necessary.

Transmission case and housing

1. Cracks or damage
2. Rough contact surfaces or damage
3. Wear or damage of extension housing bushing and oil seal

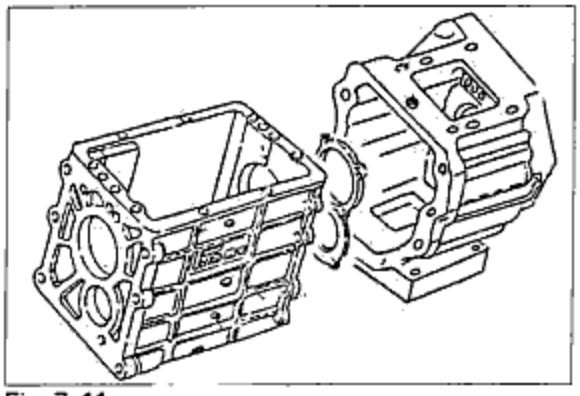

Fig. 7-11

Each gear and main drive shaft

1. Worn or damaged synchronizer cone
2. Wear or damage of parts coupled to hub sleeve
3. Worn or damaged teeth
4. Worn or damaged gear inner surface or gear edge surface
5. Worn or damaged spline of main drive shaft

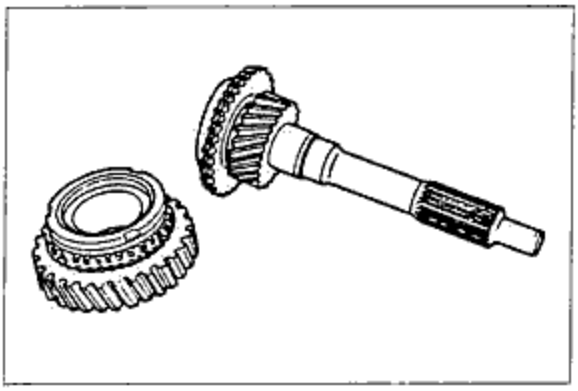

Fig. 7-12

Bearings

1. Roughness or noise while turning
2. Damaged bearing
3. Worn bearing

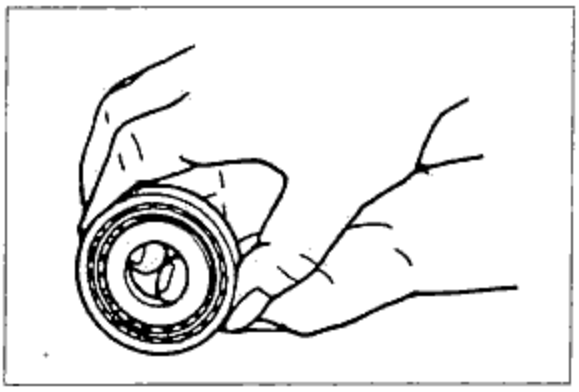

Fig. 7-13

Counter shaft

1. Worn or damaged teeth
2. Worn or damaged spline

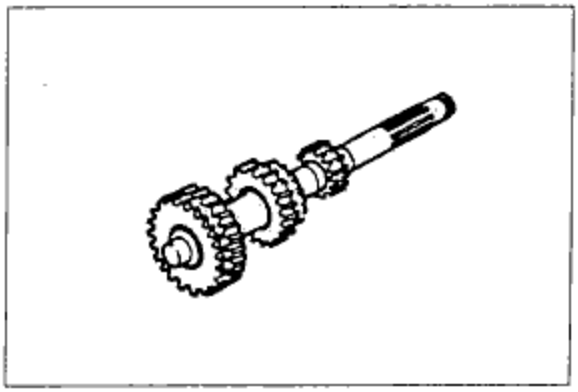

Fig. 7-14

⊠ MAIN DRIVE SHAFT ASSEMBLY

◈ DISASSEMBLY

Disassemble each part in the numbered order shown in the figure, be careful about the following items.

1. When disassembling the steel ball set on the thrust washer bottom, be careful about losing.
2. Be careful about the spring of synchronizer key and spring from the sleeve hub assembly.

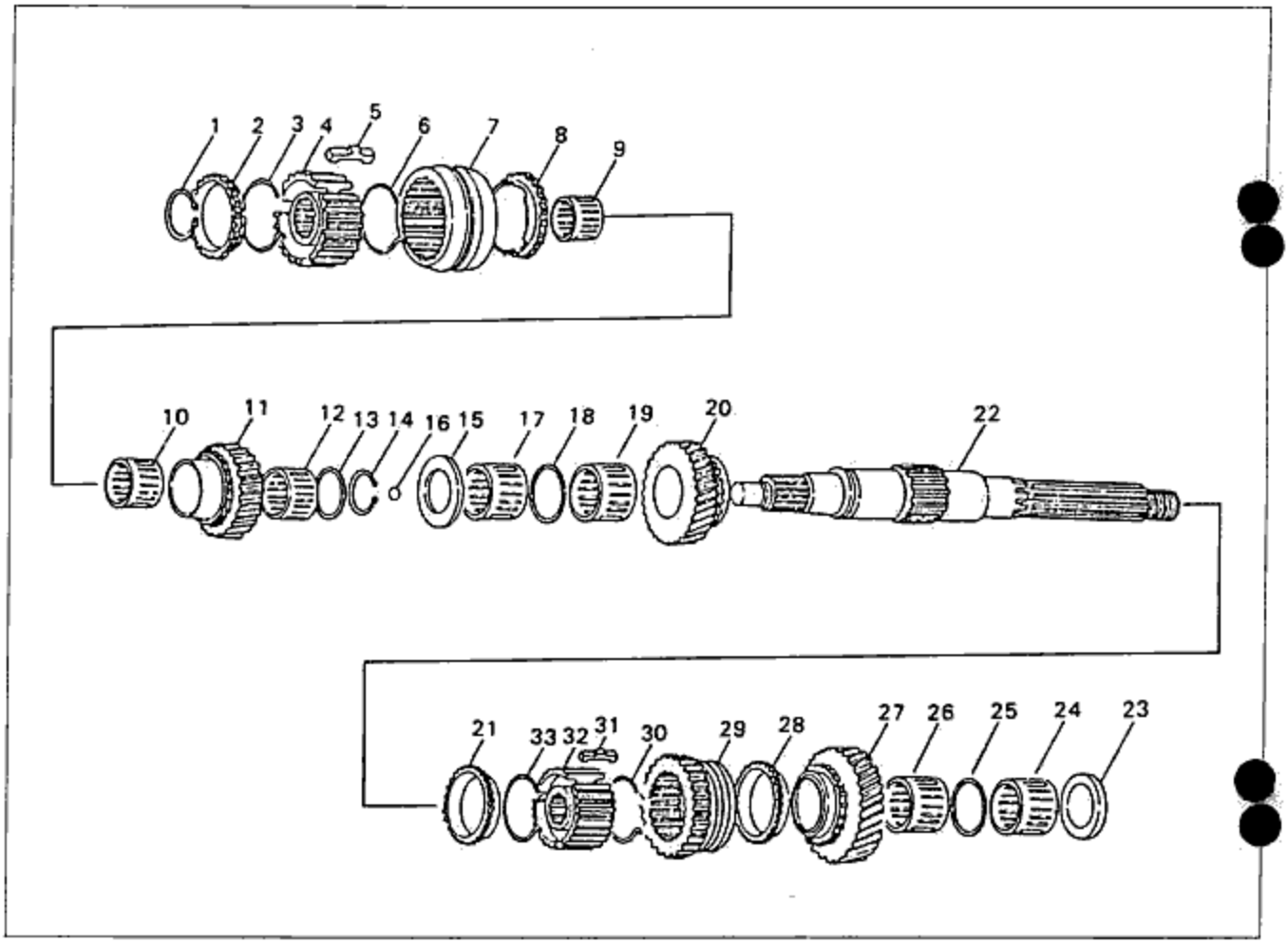

Fig. 7-15

1. Snap ring
2. 4th synchronizer ring
3. Synchronizer spring
4. 3rd, 4th hub
5. Synchronizer key
6. Synchronizer spring
7. 3rd, 4th sleeve
8. 3rd synchronizer
9. Needle bearing
10. Needle bearing
11. 3rd gear
12. Needle bearing
13. Spacer (T=1.5mm, 0.06in)
14. Snap ring
15. Thrust washer
16. Steel ball
17. Needle bearing
18. Spacer (T=3mm, 0.12 in)
19. Needle bearing
20. 2nd gear
21. 2nd synchronizer ring
22. Main shaft
23. Spacer (T=5mm, 0.20in)
24. Needle bearing
25. Spacer (T=6mm, 0.24in)
26. Needle bearing
27. 1st gear
28. 1st synchronizer ring
29. Reverse gear
30. Synchronizer spring
31. Synchronizer key
32. 1st, 2nd hub
33. Synchronizer spring

◈ INSPECTION

Synchronizer ring

1. Condition of mesh with gear

NOTE

- If the meshing is not good, apply a thin coating of compound to the gear-to-ring contact surfaces, and correct by lapping.

2. Worn or damaged spline
3. Worn or damaged taper surface

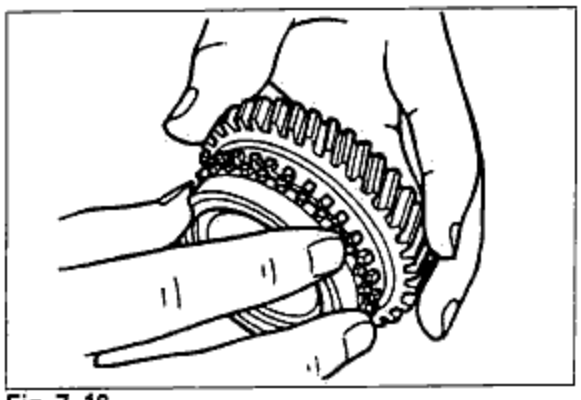

Fig. 7-16

4. Clearance between synchronizer ring and flank surface of gear

Standard value : 1.5mm(0.059 in)
Limit : 0.8mm(0.031 in)

NOTE

- Press-fit the synchronizer ring uniformly into the gear, and measure all around.

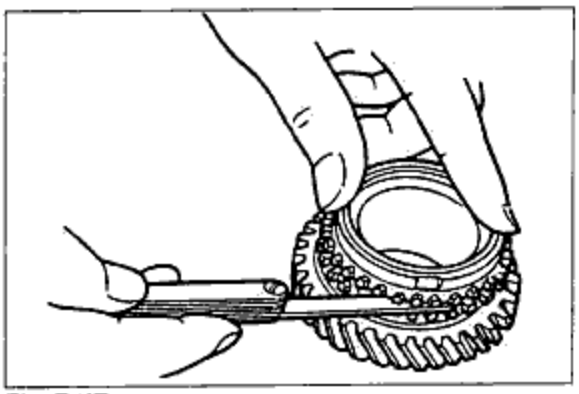

Fig. 7-17

Clutch hub sleeve

1. Wear or damage to clutch hub sliding surfaces
2. Clearance between hub sleeve and release fork

Standard value : 0.2~0.3mm(0.008~0.012 in)
Limit : 0.8mm(0.031 in)

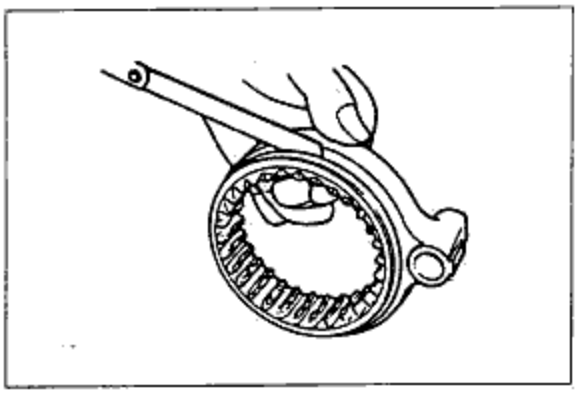

Fig. 7-18

3. Worn or damaged clutch hub sleeve

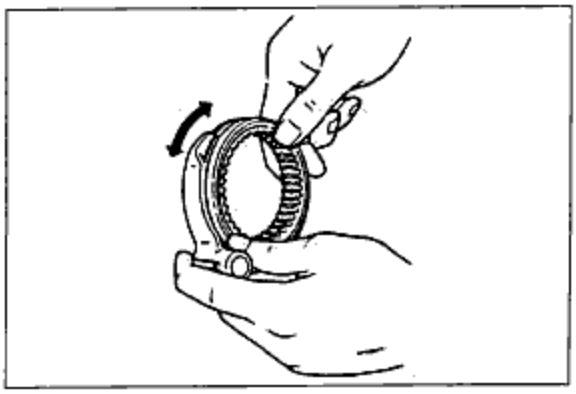

Fig. 7-19

Synchronizer key and key spring

1. Worn key
2. Fatigue or deformation of spring

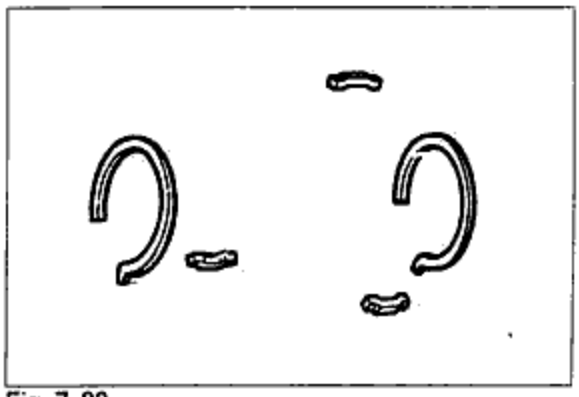

Fig. 7-20

Main shaft

1. Deflection

   Deflection limit : 0.03mm(0.001 in)

2. Wear or damage of each spline
3. Wear or damage of meshed part of each gear
4. Wear or damage of coupled part of the main drive shaft

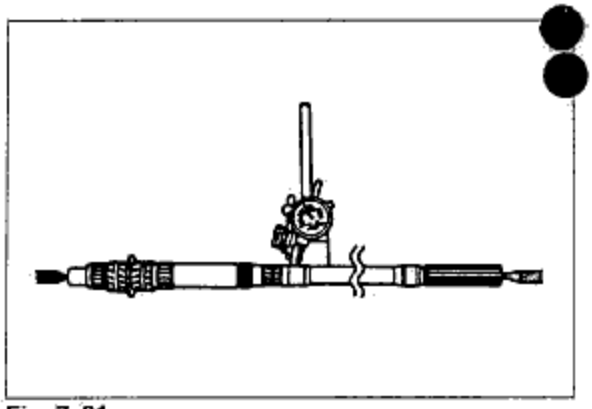

Fig. 7-21

◇ ASSEMBLY OF TRANSMISSION ASSEMBLY

1. Assembly of the main shaft assembly is the reverse order of the disassembly and refer to the following figure. Be careful about the direction of gear, sleeve hub and washer.

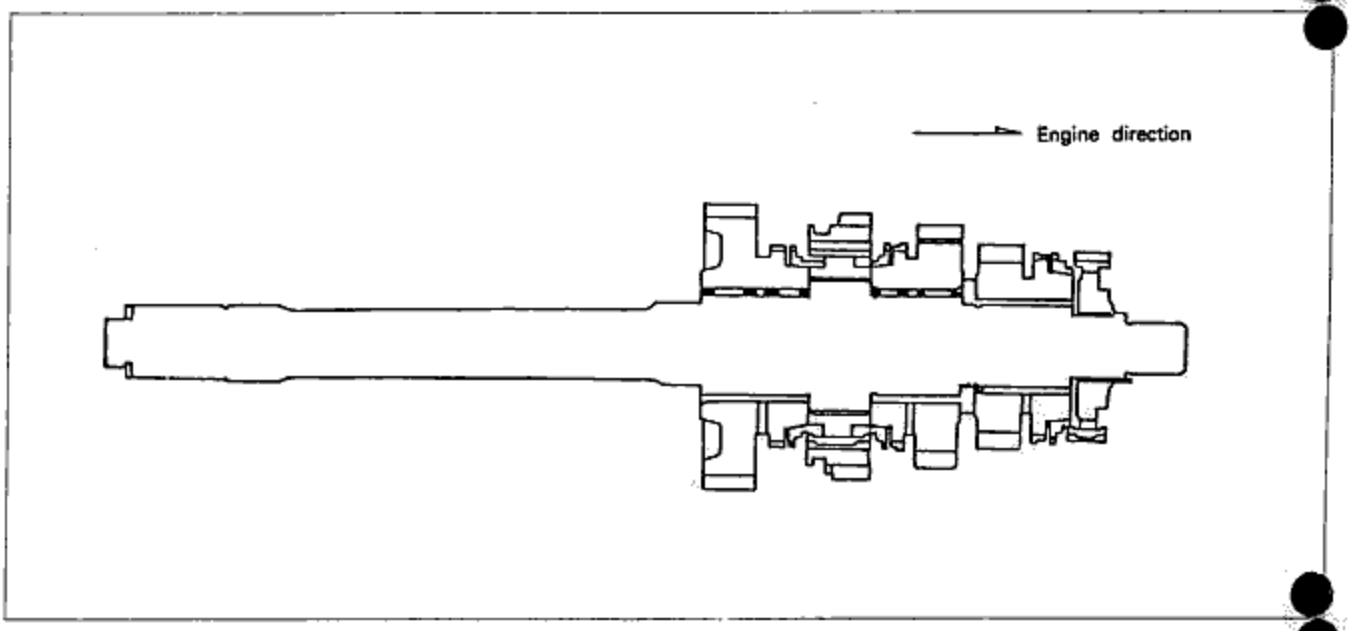

Fig. 7-22

2. Assemble the counter shaft on the transmission case inside.

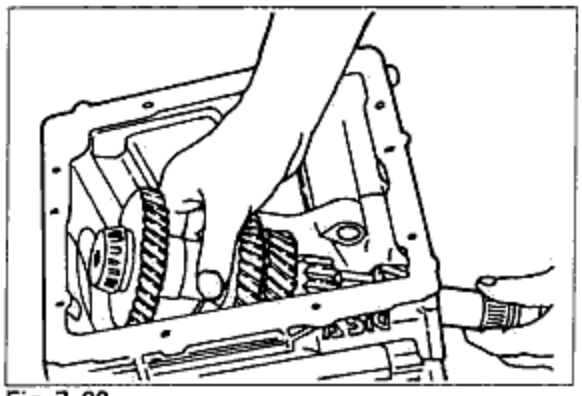

Fig. 7-23

3. Assemble the reverse idle gear and reverse idle shaft and pin on the transmission case inside.

CAUTION

- Be careful about reverse idle gear direction.

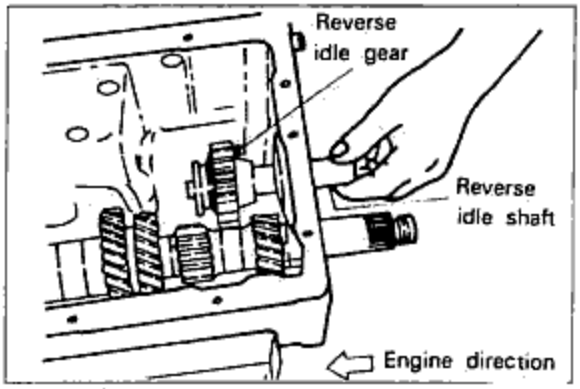

Fig. 7-24

4. After assembling the main shaft assembly on the transmission case, then assembling the main drive gear.

CAUTION

- Check whether 3rd, 4th synchronizer ring is assembled on the main shaft front side or not.
- Check whether the needle bearing is assembled on the main drive gear inside.

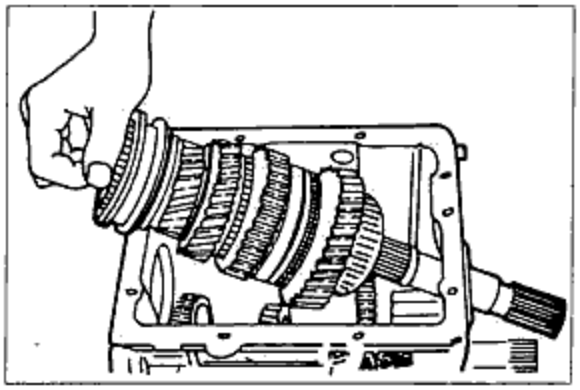

Fig. 7-25

5. Press in the bearing of the main drive side and the main shaft side.

(1) Press in the bearing cautiously, synchronizer ring doesn't operate if there's shock under press in it.
(2) Check if 1st, 2nd and 3rd, 4th synchronizer ring operates well after press in it(Arrow part of the figure).

6. Press in the counter shaft both sides bearing.

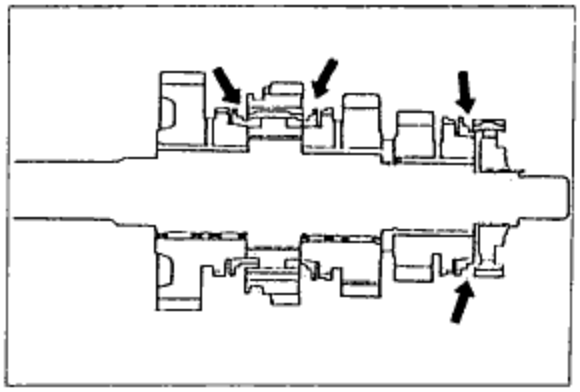

Fig. 7-26

7. Assemble the 1st-2nd, 3rd-4th shift fork on the each sleeve groove.

CAUTION

- **Keep the direction as shown in the figure during assembling.**

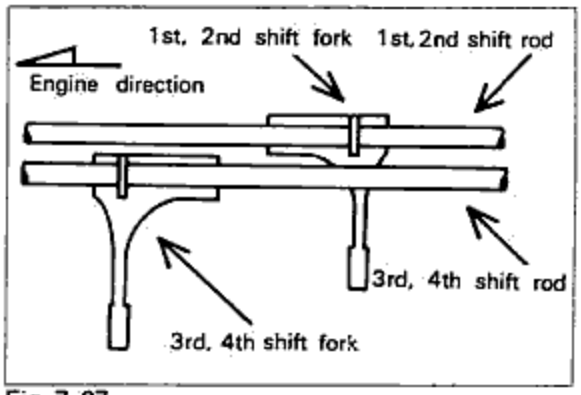

Fig. 7-27

8. Assemble the 5th shift rod on the reverse fork when reverse fork is assembled on the reverse lever.
9. Assemble the interlock pin between the 5th shift rod and the 3rd-4th shift rod.
10. Assemble the 3rd-4th shift rod on the 3rd-4th shift fork.

CAUTION

- **Assemble when double interlock pin is assembled on the 3rd-4th shift rod.**

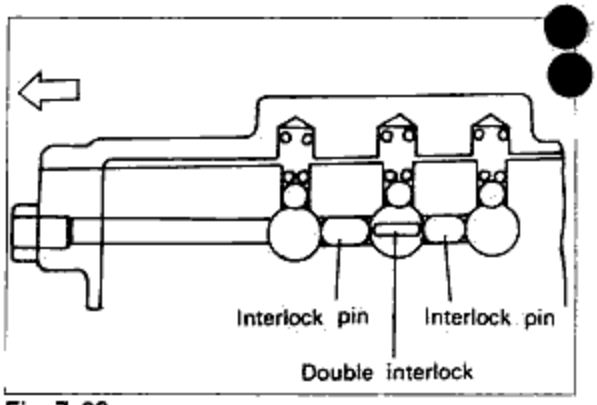

Fig. 7-28

11. After assembling the interlock pin between the 1st-2nd shift rod and the 3rd-4th shift rod, assemble the 1st-2nd shift rod on the shift fork.
12. Assemble the 1st-2nd plug after assembling each stage interlock pin.
13. Assemble the each stage shift rod and shift fork with spring pin.
14. Assemble each stage shift end with spring pin as the figure.
15. Assemble the bearing cover on the transmission case.

CAUTION

- **Measure clearance between bearing cover and bearing of the main shaft bearing portion by thickness gauge as the figure.**
  If the clearance is not within the standard, adjust with shim(specified value of clearance : 0~0.1mm 〈0.004in〉).

Type of shims	Part No.	Thickness mm(in)
	99963 6610	0.1 (0.004)
	99963 6615	0.15(0.006)

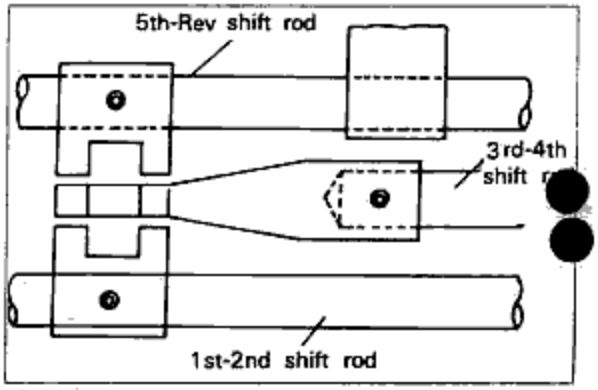

Fig. 7-29

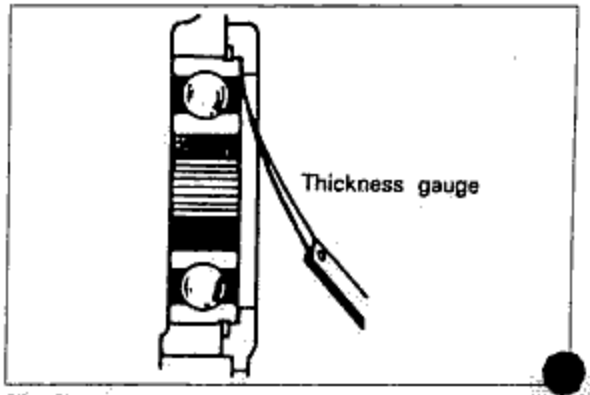

Fig. 7-30

16. Assemble in the order of sleeve, needle bearing (two), spacer, counter 5th gear, synchronizer ring sleeve hub assembly and lock plate on the counter shaft, and then tighten the locknut to the specified torque.

Tightening torque : 12±3.5kg·m
(87±25.3ft·lb)

CAUTION

- Have to do caulking after tightening the locknut. Be careful about the direction during the sleeve hub assembly assembling.

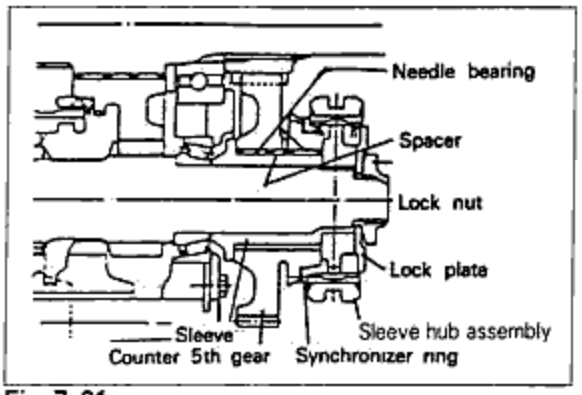

Fig. 7-31

17. When assembling 5th gear on the main shaft, be careful of its direction.

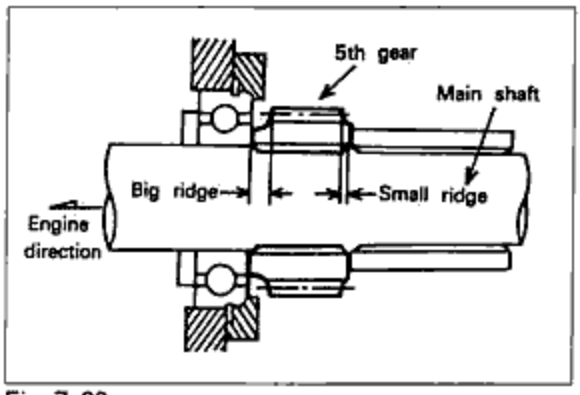

Fig. 7-32

18. Assemble 5th shift fork and shift rod. Be careful about the direction.

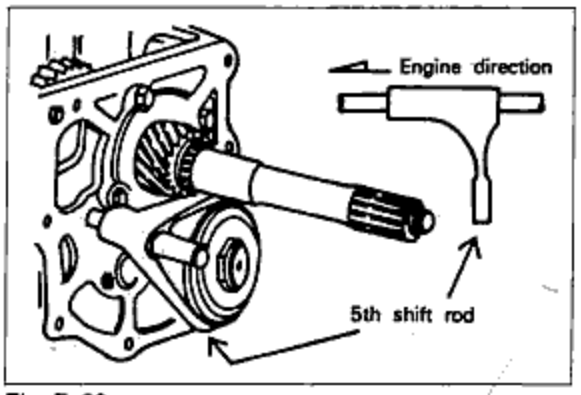

Fig. 7-33

19. Apply a coating of sealant on the extension housing and assemble it on the transmission case.

Tightening torque : 3~4kg·m(21.7~28.9ft·lb)

20. Assemble the spacer, bearing and bearing cover on the main shaft.

Bearing cover tightening torque : 1.2~2kg·m(8.7~14.4ft·lb)

21. Assemble the transfer drive gear on the main shaft and tighten the lock nut then do caulking.

Tightening torque : 12±3.5kg·m(87±25.3ft·lb)

CAUTION

- Be careful about the direction when assembling the transfer drive gear.

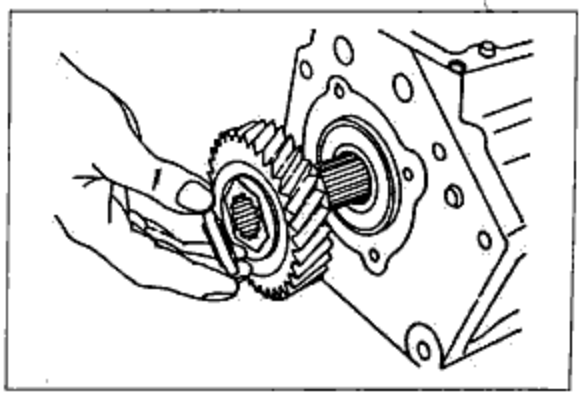
Fig. 7-34

22. After assembling the steel ball(3) and spring(3) on the transmission case, and then apply a coating of sealant then put gasket on the bolt mounting hole.
23. Apply a coating of sealant on the gasket again, and assemble the top cover.

Tightening torque : 1.6~2.3kg·m(11.6~16.6ft·lb)

CAUTION

- Sealant shouldn't be inserted into the transmission case inside.

24. Apply a coating of sealant on the clutch housing contact surface of the transmission case and attach the gasket and apply a coating of sealant on the gasket then assemble the clutch housing.

Tightening torque : 4~6kg·m(29~43.3ft·lb)

CAUTION

- Apply a coating of grease on the oil seal set on the clutch housing.
  After adjusting with shim between main drive gear side bearing of clutch housing and contact surface of counter shaft gear side bearing, and then assemble it.

Types of shimes	Main shaft side		Counter shaft side	
	Part No.	Thickness	Part No.	Thickness
	99963 6610	0.10mm (0.004in)	99963 4310	0.10mm (0.004in)
			99963 4315	0.15mm (0.006in)
	99963 6615	0.15mm (0.006in)	99963 4330	0.30mm (0.012in)

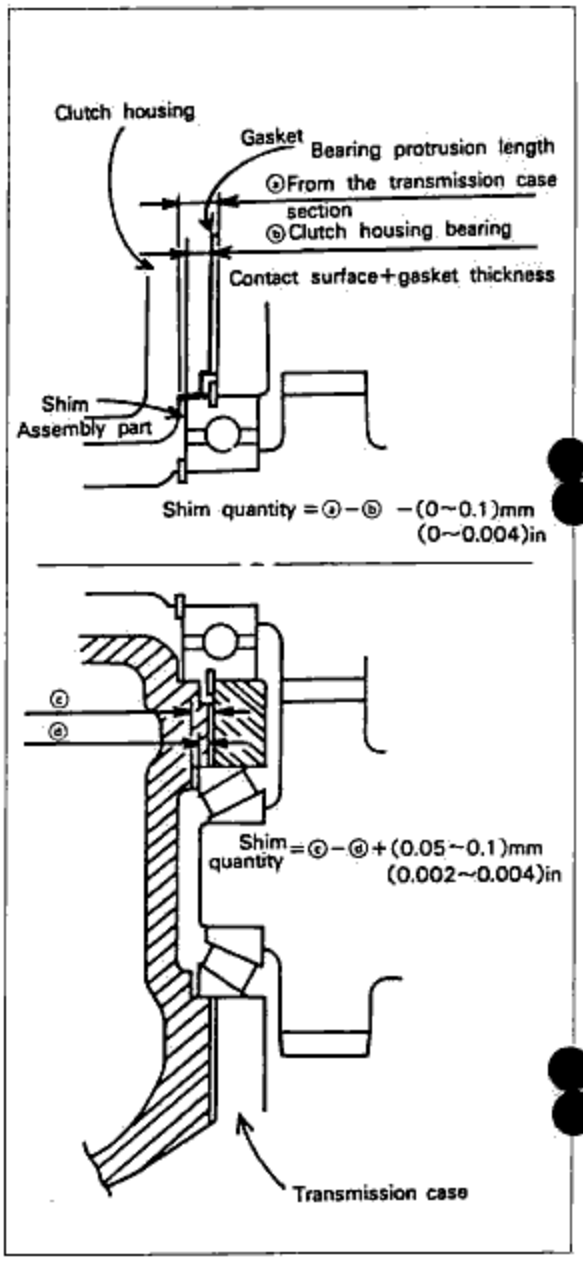

Fig. 7-35

25. Apply a coating of sealant on the control case contact surface of the extension housing, and assemble the gasket and control case assembly.

Tightening torque : 1.6~2.3kg·m(11.6~16.6ft·lb)

⊠ TRANSFER ASSEMBLY

◆ REMOVAL

Remove the transfer assembly from the transmission by using a rubber hammer.

⊠ FRONT & REAR COVER(ONLY INDIRECT TYPE TRANSFER)

◈ REMOVAL AND DISASSEMBLY

Disassembly is in the numbered order shown in the figure.

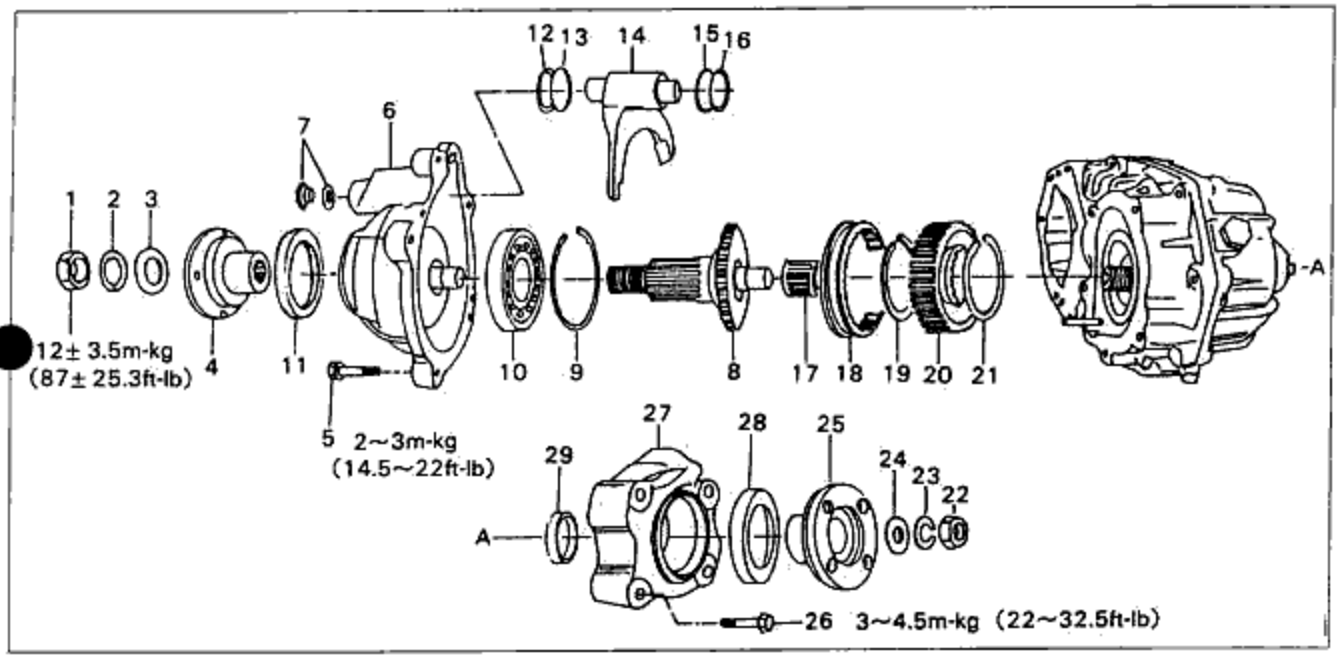

Fig. 7-36

1. Lock nut
2. Spring washer
3. Plain washer
4. Flange companion
5. Bolt
6. Front cover
7. Plug & washer
8. Front drive shaft
9. Snap ring
10. Ball bearing
11. Oil seal
12. Snap ring
13. Washer
14. 2nd-4th shift fork ASS'Y
15. Washer
16. Snap ring
17. Needle bearing
18. Sleeve
19. Snap ring
20. Front drive hub
21. Snap ring
22. Lock nut
23. Spring washer
24. Plain washer
25. Flange companion
26. Bolt
27. Rear cover
28. Oil seal
29. Shim

CAUTION

- **Don't disassemble the 2nd-4th shift fork.**
- **Disassemble the front cover and rear cover by using a rubber hammer.**

◈ INSPECTION

1. Damage of the oil seal
2. Cracks or damage of the front & rear cover
3. Wear of the fork

◈ ASSEMBLY

1. Assembly is in the reverse order of disassembly.
   Before assembling, apply a coating of oil on the oil seal attaching the front cover and rear cover.

REAR CASE ASSEMBLY

DISASSEMBLY

Disassembly is in the numbered order shown in the figure.

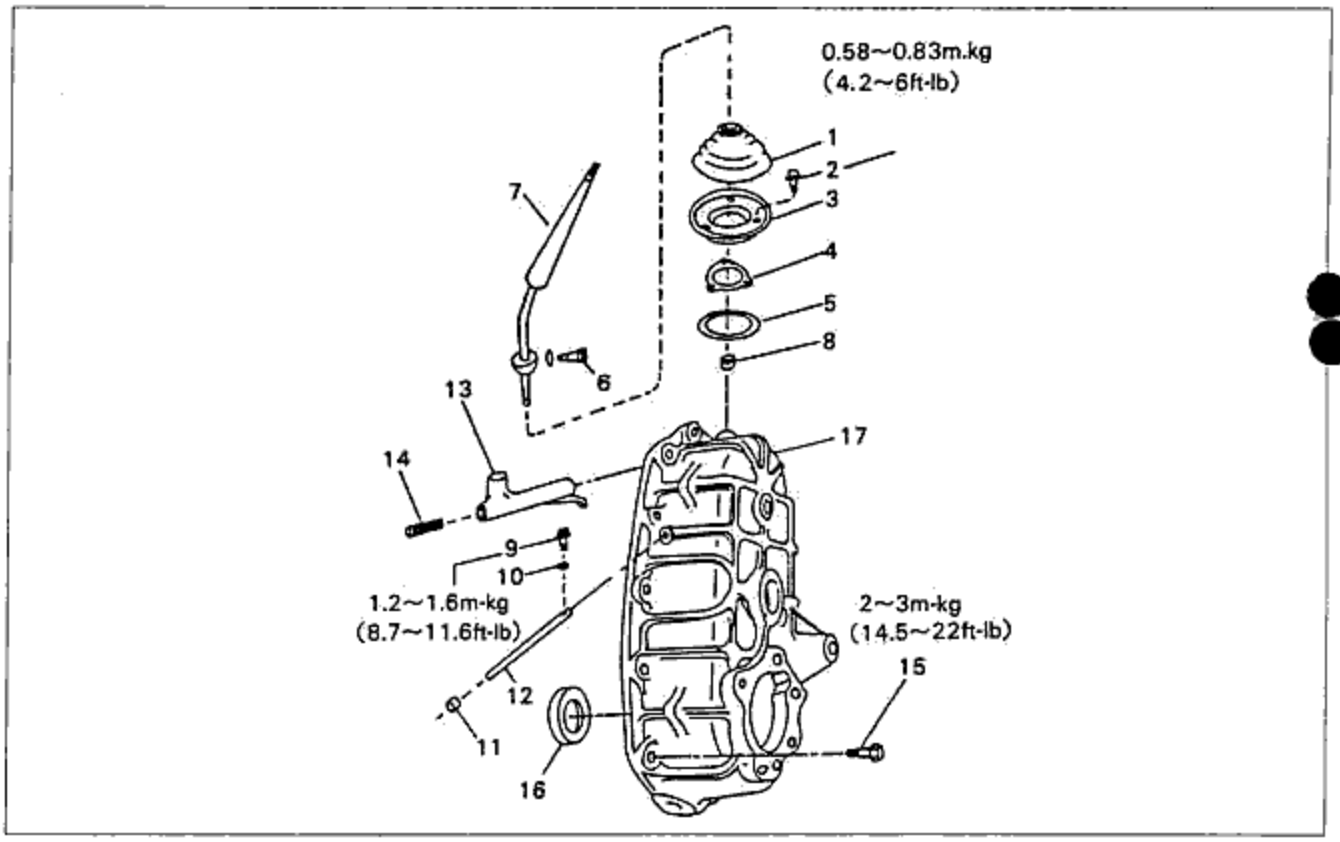

Fig. 7-37

1. Boot
2. Bolt
3. Cover plate
4. Gasket
5. Spring washer
6. Bolt
7. Change lever ASS'Y
8. Change seat
9. Bolt
10. Spring washer
11. Sealing cap
12. Shift rod
13. Crank lever
14. Spring
15. Bolt
16. Bearing outer race
17. Rear case

INSPECTION

1. Crack or damage of the bearing outer race
2. Damage of the boot

CAUTION

- When disassembling the rear case, put the change lever on 4H position.

ASSEMBLY

1. Assembly is in the reverse order of disassembly.

FRONT CASE, MAIN SHAFT AND IDLE GEAR ASSEMBLY

REMOVAL AND DISASSEMBLY

Disassembly is in the numbered order shown in the figure.

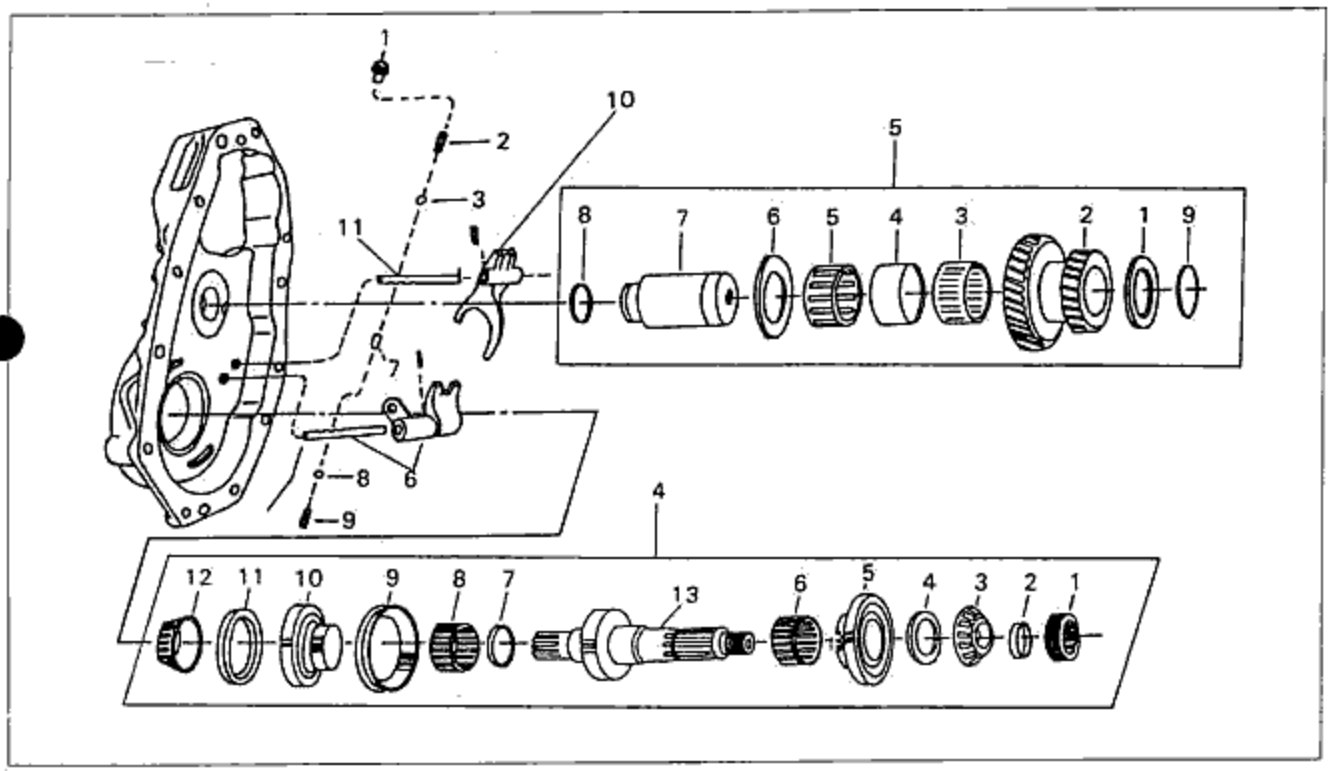

Fig. 7-38

1. Plug
2. Spring
3. Steel ball
4. Main shaft ASS'Y
5. Idle gear ASS'Y
6. 2nd-4th shift end & rod
7. Interlock pin
8. Steel ball
9. Spring
10. H·L shift fork
11. H·L shift rod

① Speedo drive gear	⑥ Needle bearing	⑪ Spacer
② Spacer	⑦ Spacer	⑫ Bearing
③ Bearing inner race	⑧ Needle bearing	⑬ Main shaft
④ Spacer(t=6mm)	⑨ Sleeve	
⑤ Low gear	⑩ High gear	

① Thrust washer	④ Spacer	⑦ Idle shaft
② Ilde gear	⑤ Needle bearing	⑧ O-ring
③ Needle bearing	⑥ Spacer	⑨ O-ring

INSPECTION

1. Damage or wear of the bearing outer race and inner race.
2. Wear or damage of the shift fork.

ASSEMBLY

Assembly is in the reverse order of disassembly.

ASSEMBLY OF TRANSFER ASSEMBLY

1. Assemble the transfer main shaft with the reverse of disassembly.

CAUTION
- Be careful for the direction of the gear and bearing.
- When pressing in the bearing, give even power to the bearing whole circle.

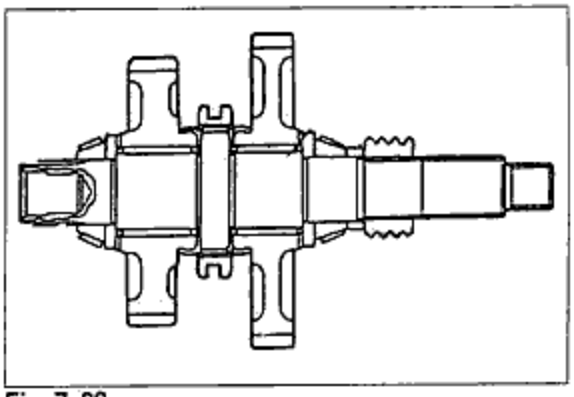

Fig. 7-39

2. Assemble the main shaft assembly idle gear, shift fork and rod on the front case.

CAUTION
- Replace outer race & inner race at the same time when replacing the bearing.
- After assembling, put shift rod & fork on the 4H position for next rear case assembling.

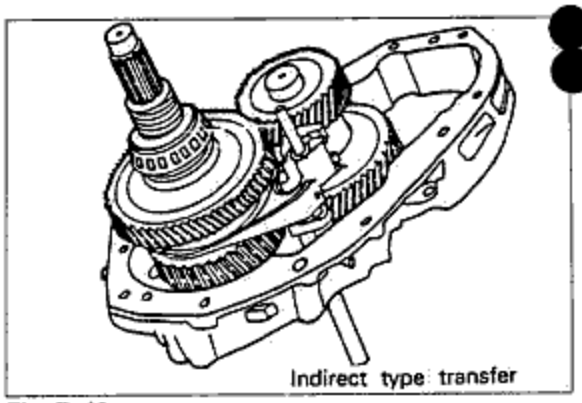

Fig. 7-40

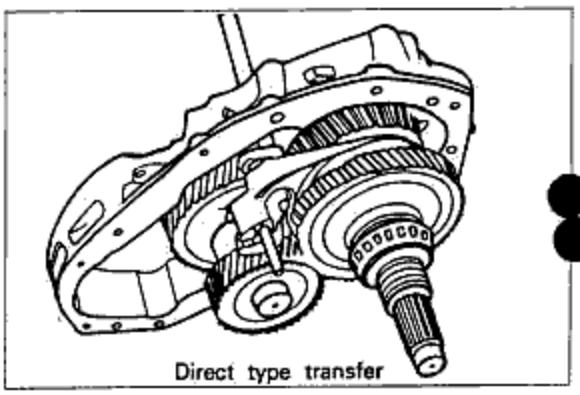

Fig. 7-41

3. Assemble the crank lever and rod, shift lever assembly with the rear case being reversed order of disassembling.

CAUTION
- The thrust washer is attached on rear case side among its to be attached on the idle gear side apply grease to the rear case inside and assemble it.

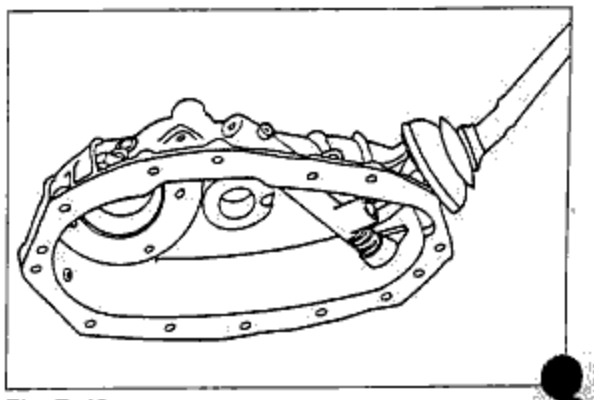

Fig. 7-42

4. Assemble the front cover with the reverse order of disassembling and assemble on the transfer front case.

CAUTION

- Be careful for the direction when assembling the front drive hub and 2nd-4th shift fork.

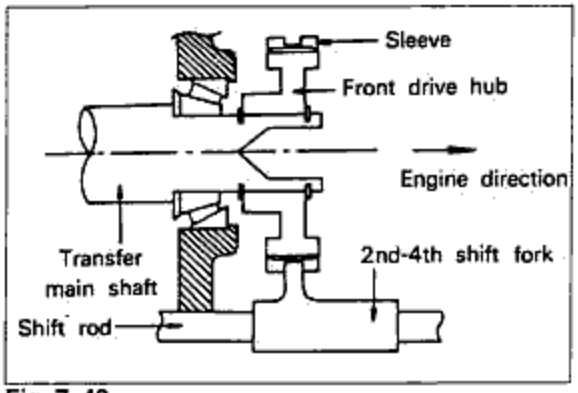

Fig. 7-43

5. Assemble the rear cover with the reverse order of disassembling and assemble on the transfer rear case.

CAUTION

- When assembling the rear cover, adjust with shim. Refer to the figure 7-44.

	Part No.	Thickness
Types of shims	99963 6310	0.10mm(0.004in)
	99963 6315	0.15mm(0.006in)
	99963 6330	0.30mm(0.012in)

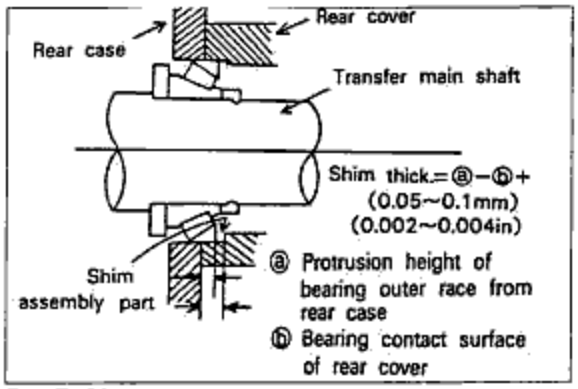

Fig. 7-44

6. Tighten the front cover and rear cover lock nut.

CAUTION

- When tightening, let the large side of chamber be put outward.

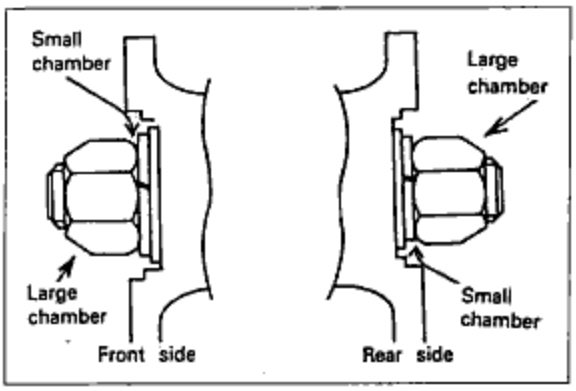

Fig. 7-45

PROPELLER SHAFT 8

- OUTLINE ..... 8—2
  - STRUCTURAL VIEW ..... 8—2
- SPECIFICATIONS ..... 8—2
- TROUBLESHOOTING GUIDE ..... 8—3
- ON-VEHICLE INSPECTION ..... 8—3
- REMOVAL ..... 8—4
- DISASSEMBLY ..... 8—5
- ASSEMBLY ..... 8—6
- INSPECTION ..... 8—7
- INSTALLATION ..... 8—7

◇ OUTLINE

For use of 4-wheel drive, a front propeller shaft is used.

◈ STRUCTURAL VIEW

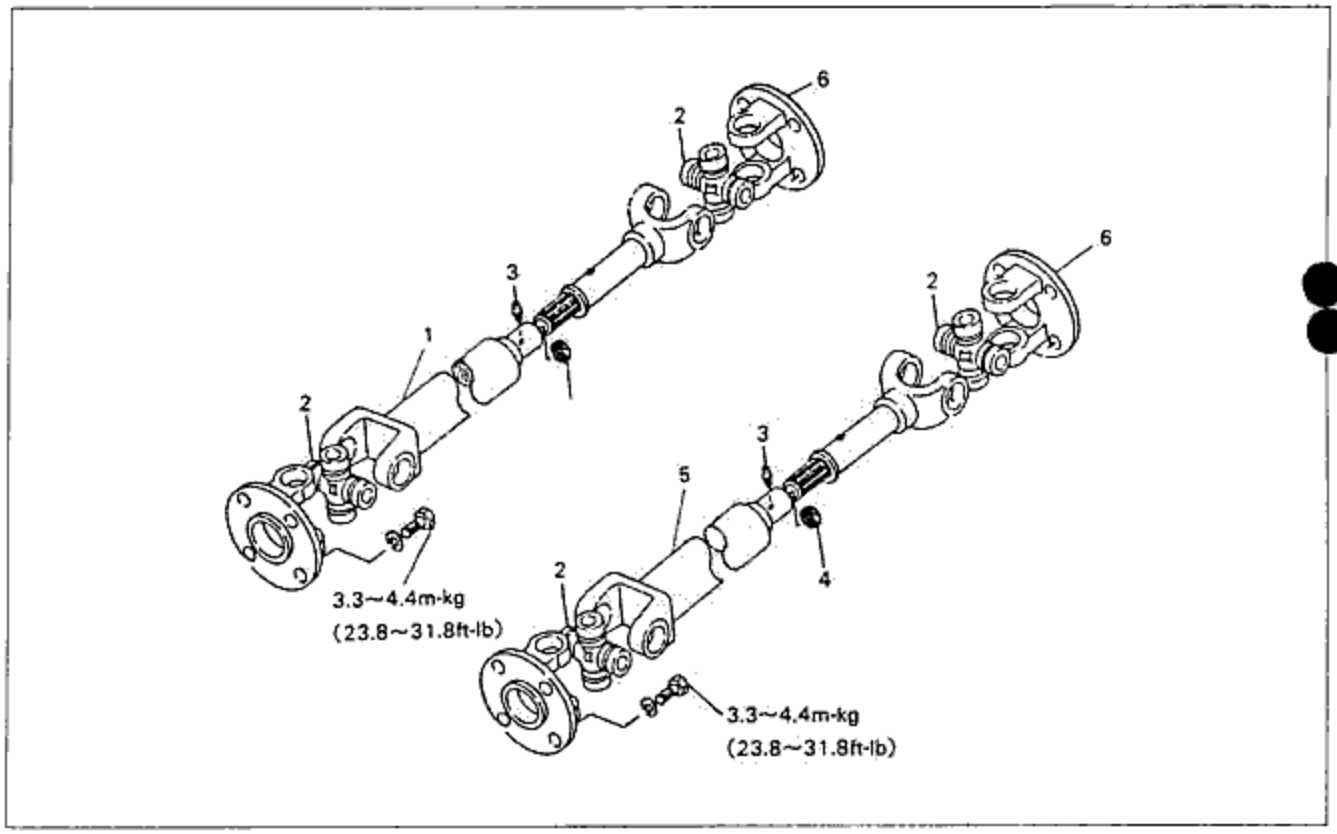

Fig. 8-1

1. Front propeller shaft
2. Universal joint ASS'Y
3. Nipple
4. Dust seal
5. Rear propeller shaft
6. Flange yoke

◇ SPECIFICATIONS

	A mm(in)	B mm(in)	Number of universal joint
Front shaft	621~626(24.4~24.6)	42(1.65)	2
Rear shaft	647~659(25.5~25.9)	42(1.65)	2

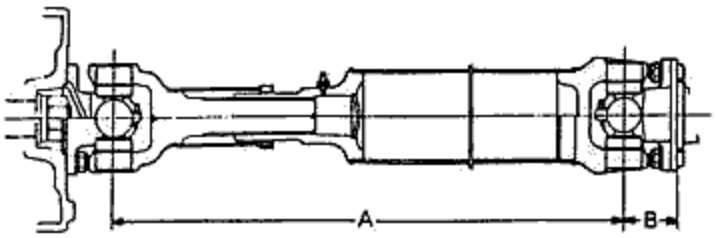

⊠ TROUBLESHOOTING GUIDE

Problem	Possible cause	Correction
Vibration	· Bent propeller shaft · Left/right universal joint snap rings are not symmetrical. · Loose yoke installation	· Replace · Adjust · Tighten
Noise	· Worn or damage universal joint bearing · Universal joint snap ring missing · Loose yoke installation	· Replace · Repair · Tighten

⊠ ON-VEHICLE INSPECTION

Spline backlash

Check for backlash by shaking each part.

Looseness

Check for looseness in the yoke installation bolts and nuts, and tighten if necessary.

Propeller shaft deflection

After jacking up the vehicle and supporting the vehicle by means of safety stands, turn the wheel by hand and check the deflection in the propeller shaft. Take measurements at three points(front, center and rear) of the propeller shaft.

Deflection limit : 0.4mm(0.0157 in)

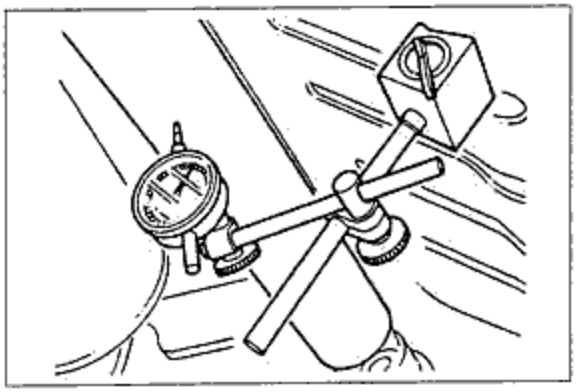

Fig. 8-2

⊠ REMOVAL

Front propeller shaft

1. Disconnect propeller shaft flange from companion flange on front.

   Differential
   (1) Put matchmarks on the flanges.
   (2) Remove the four bolts and nuts.

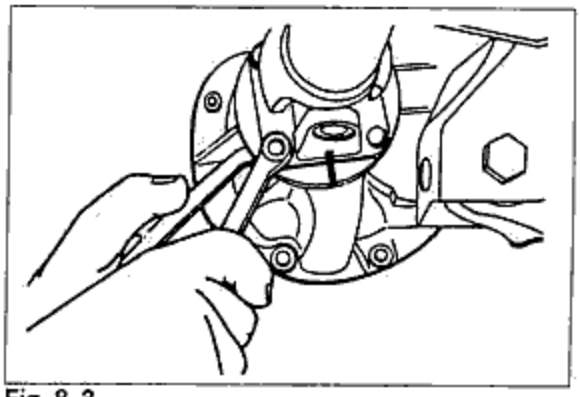

Fig. 8-3

2. Remove front propeller shaft.
   (1) Suspend the front side of the propeller shaft.
   (2) Put matchmarks on the flanges.
   (3) Remove the four nuts.
   (4) Remove the front propeller shaft.

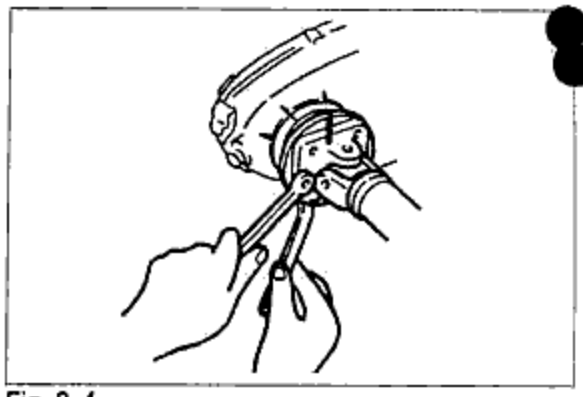

Fig. 8-4

Rear propeller shaft

1. Disconnect propeller shaft flange from companion flange on transfer.
   (1) Put matchmarks on the flanges.
   (2) Remove the four bolts and nuts.

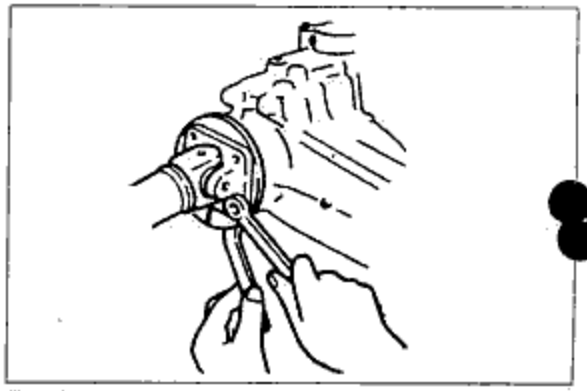

Fig. 8-5

2. Remove rear propeller shaft.
   (1) Put matchmarks on the flanges.
   (2) Remove the four bolts and nuts.
   (3) Remove the rear propeller shaft.

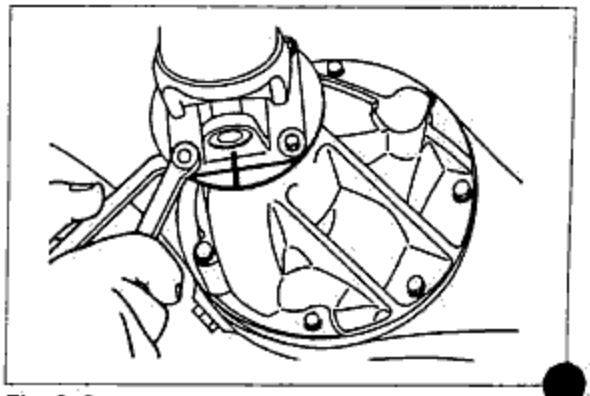

Fig. 8-6

⊠ DISASSEMBLY

1. Clean the universal joint.
2. Place the propeller shaft in a vise.

CAUTION

- **Use pads in the vise so as not to damage the propeller shaft.**

3. Place matchmarks on the propeller shaft, spider and yoke.

CAUTION

- **If the propeller shaft, spider and yoke are not correctly combined when assembled, vibration may result.**

4. Remove all snap rings by using a flat-tip screwdriver.

CAUTION

The snap rings cannot be re-used.

5. Remove the bearings by lightly tapping the yoke with a hammer as shown in the figure.

6. Remove the yoke.

7. Remove the bearings by using a suitable rod and a hammer as shown in the figure.
8. Remove the spider.

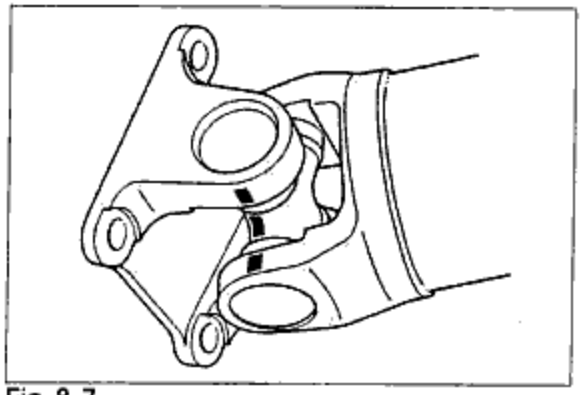

Fig. 8-7

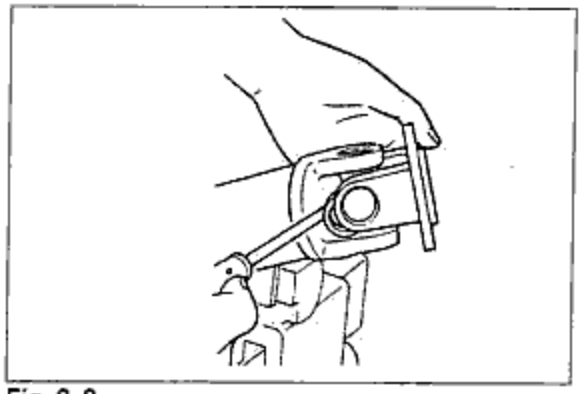

Fig. 8-8

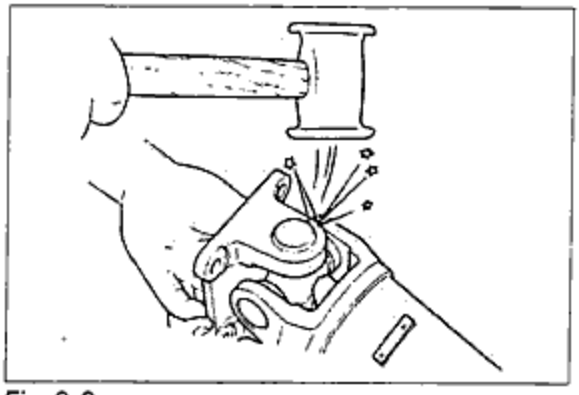

Fig. 8-9

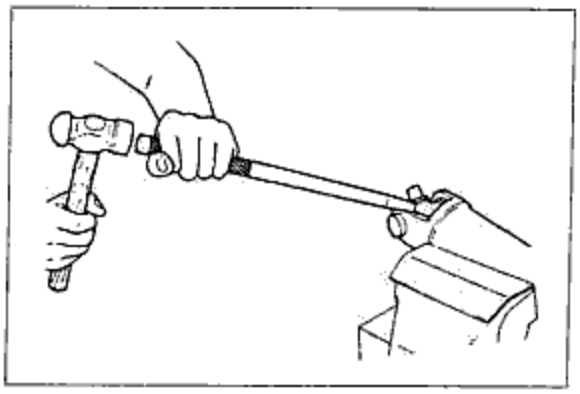

Fig. 8-10

ASSEMBLY

1. Before assembly, coat the inside of the bearing cap and roller and the grease groove hole of the spider with grease(lithium base, NLGI No. 2)

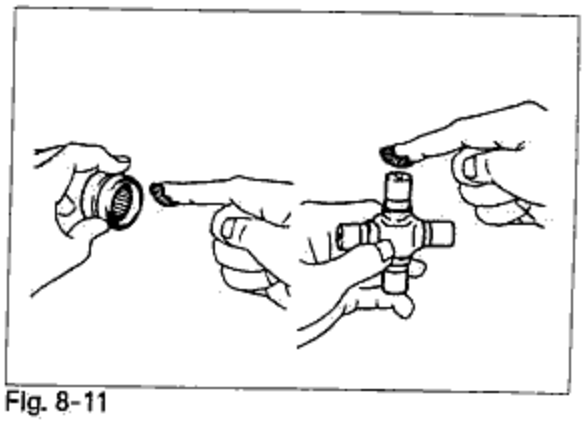

Fig. 8-11

2. While in a vise, set 2 bearings in the propeller shaft, and tap them in by using a plastic hammer.

CAUTION

- Align the propeller shaft and spider mating marks.

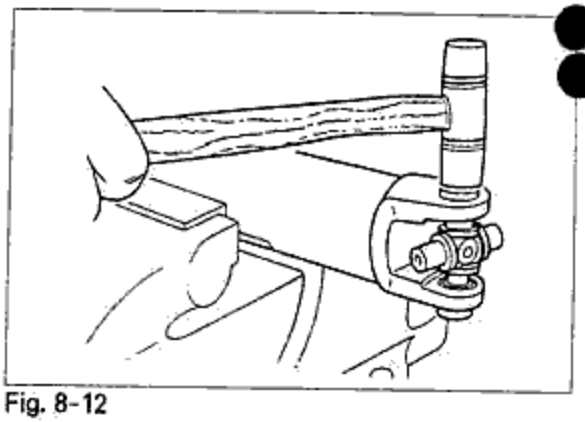

Fig. 8-12

3. Place the yoke on the propeller shaft and spider installed in step 2, and tap the bearing into the yoke by using a plastic hammer.

CAUTION

- Align the spider and yoke mating marks.

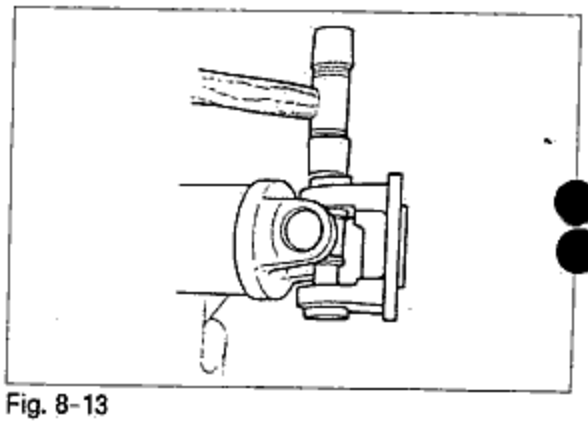

Fig. 8-13

4. Install new snap rings.

CAUTION

- The snap rings cannot be re-used.
- Select the snap rings so that the universal joint starting torque will be as specified.
- All 4 snap rings must be the same thickness.
- Check to be sure that each snap ring fits correctly into the groove.

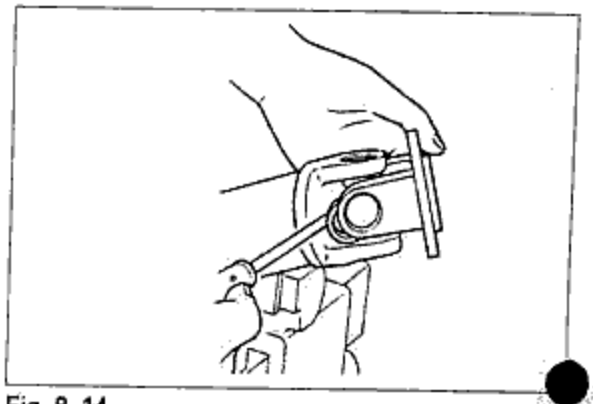

Fig. 8-14

INSPECTION

Check the following points, and if a problem exists, either repair or replace the appropriate part.

1. Universal joint starting torque.

Starting torque :
Front:3~8kg·cm(0.22~0.58ft·lb)
Rear :5~14kg·cm(0.36~1.01ft·lb)

CAUTION
- If the starting torque is not within the specified range, adjust by changing the snap rings.

Thickness of snap rings(9 kinds) : Unit mm(in)
1.22(0.0480), 1.24(0.0488), 1.26(0.0496)
1.28(0.0504), 1.30(0.0512), 1.32(0.0520)
1.34(0.0528), 1.36(0.0535), 1.38(0.0543)

2. Deflection of front and rear propeller shaft.

NOTE
- Measure the deflection at the center of the shaft.

Deflection limit : 0.4mm(0.016 in)

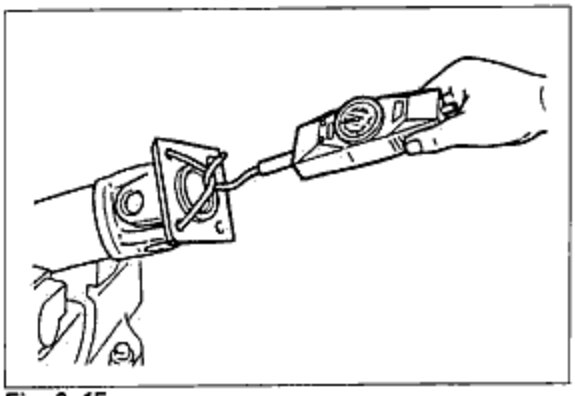
Fig. 8-15

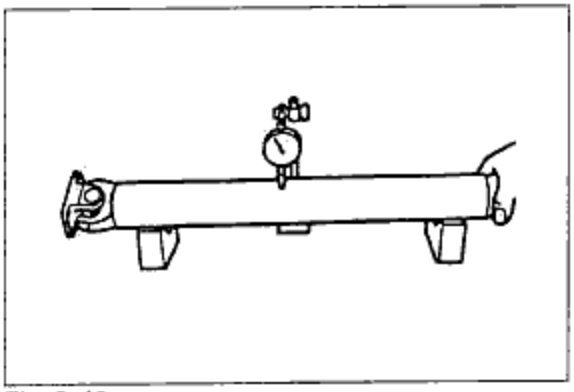
Fig. 8-16

INSTALLATION

1. Align the match marks on the propeller shaft.

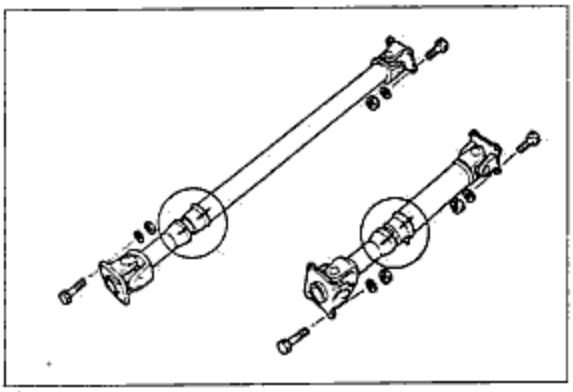
Fig. 8-17

2. Connect front propeller shaft flange to companion flange on transfer.
   (1) Align the matchmarks on the flanges and connect the flanges with four bolts and nuts.
   (2) Tighten the bolts and nuts.

Tightening torque : 49~59N·m
(5~6kg·m, 36~43ft·lb)

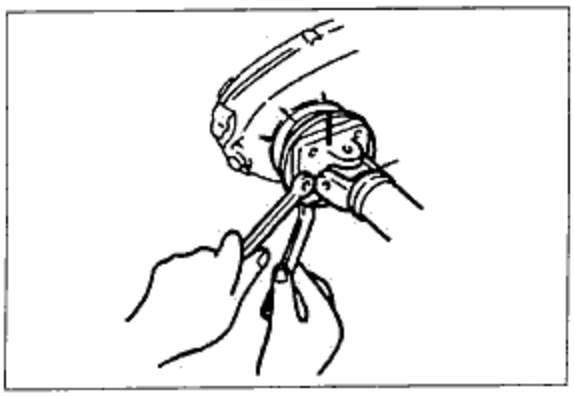
Fig. 8-18

3. Connect propeller shaft flange to companion flange on front differential.
   (1) Align the matchmarks on the flanges and connect the flanges with four bolts and nuts.
   (2) Tighten the bolts and nuts.

   Tightening torque :
   34.3~37.3N·m(3.5~3.8kg·m, 25.3~27.5ft·lb)

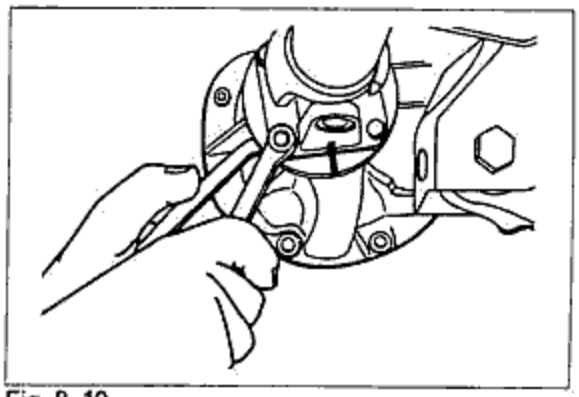

Fig. 8-19

4. Connect rear propeller shaft flange to companion flange on transfer.
   (1) Align the matchmarks on the flanges and connect the flanges with four bolts and nuts.
   (2) Tighten the bolts and nuts.

   Tightening torque :
   49~59N·m(5~6kg·m, 36~43ft·lb)

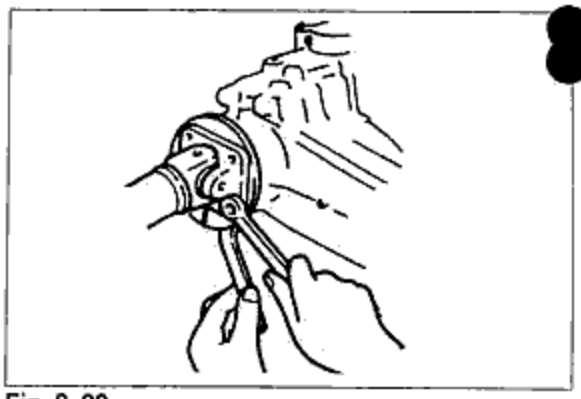

Fig. 8-20

5. Connect propeller shaft flange to companion flange on rear differential.
   (1) Align the matchmarks on the flanges and connect the flanges with for bolts and nuts.
   (2) Tighten the bolts and nuts.

   Tightening torque :
   34.3~37.3N·m(3.5~3.8kg·m, 25.3~27.5ft·lb)

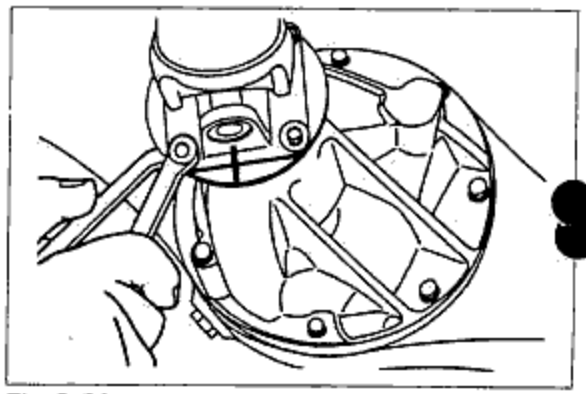

Fig. 8-21

FRONT AND REAR AXLES

9

- OUTLINE ..... 9—2
  - CROSS SECTION ..... 9—2
- SPECIFICATIONS ..... 9—3
- TROUBLESHOOTING GUIDE ..... 9—4
- FRONT AXLE ..... 9—5
  - STRUCTURAL VIEW ..... 9—5
  - DISASSEMBLY ..... 9—6
  - INSPECTION ..... 9—8
  - ASSEMBLY ..... 9—8
- REAR AXLE ..... 9—12
  - STRUCTURAL VIEW ..... 9—12
  - DISASSEMBLY ..... 9—13
  - INSPECTION ..... 9—15
  - ASSEMBLY ..... 9—15
- DIFFERENTIAL ..... 9—17
  - STRUCTURAL ..... 9—17
  - DISASSEMBLY ..... 9—19
  - INSPECTION ..... 9—22
  - ASSEMBLY ..... 9—22
  - INSTALLATION ..... 9—29

⊠ OUTLINE

Front axle

1. Both inner and outer wheel bearings are taper roller bearings.
2. Wheel nuts of left-sided wheel are all right-handed screws.

Rear axle

1. Rear axle is a semi-floating axle.
2. Wheel bearing which is taper roller bearing needs preload adjustment.
3. Differential is 7.15°.

◈ CROSS SECTION

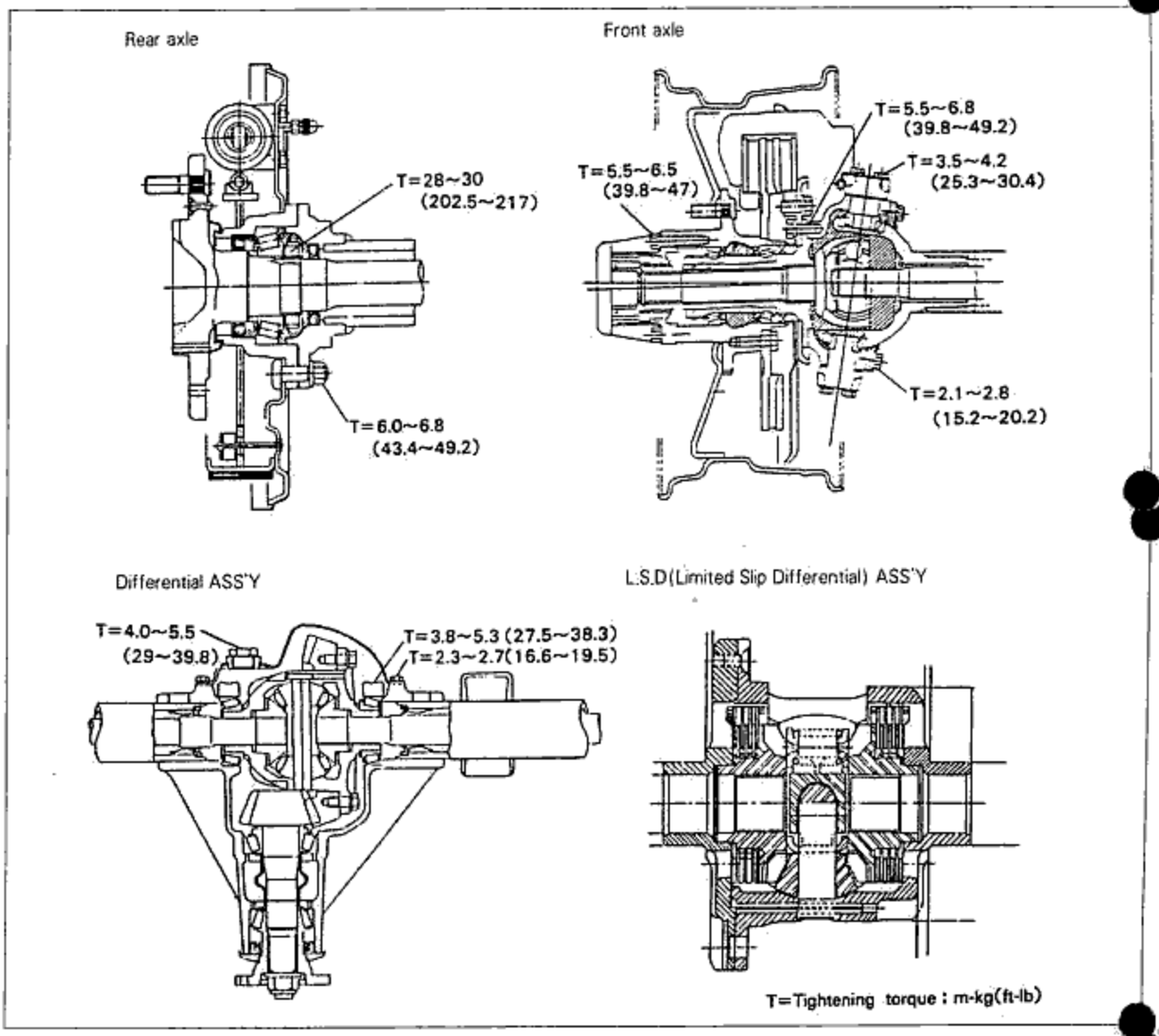

Fig. 9-1

◇ SPECIFICATIONS

Items			Specifications	Remarks
Type of axle	Front		Build-up type	
	Rear		Semi-floating type	
Axle casing	Type		Build-up type	
	Thickness		7mm(0.28in)	
Axle shaft	Length		Right side : 565.2mm(22.27 in) Left side : 760.4mm(29.94 in)	
	Diameter		ϕ30mm(1.1811 in)	
Differential	Type		Build-up	
	Reduction gear		Hypoid gear	
	Differential gear		Straight bevel gear	
	Final reduction ratio		4.875	
	Number of	Ring gear	39	
		Drive pinion	8	
Oil	Capacity		0.8 ℓ (Keep on the horizontal of oil plug)	
	Class		GL-5, SAE 80W	
Class of grease			Lithium Grease or MOS_2-added Grease	
Wheel alignment	Toe-in		1~2mm(0.039~0.08 in)	
	Camber		30′ ±30′	
	Caster		Power steering : 7°30′ Manual steering : 6°	
	Kingpin angle		8°30′ ±30′	

⊠ TROUBLESHOOTING GUIDE

Problem	Possible cause	Correction
Steering wheel "Pulls" Steering wheel pulls to left or right on flat road	· Incorrect preload of front wheel bearings, or worn wheel bearings	· Replace
	· Deformed steering linkage	· Replace
	· Deformed knuckle arm	· Replace
	· Improperly adjusted wheel alignment(toe-in)	· Adjust
	· Uneven tire pressure	· Adjust
	· Abnormal tire wear(left/right different)	· Replace
	· Severe brake drag	· Repair
Unstable driving	· Incorrect preload of wheel bearings, or worn wheel bearings	· Replace
	· Deformed steering linkage	· Replace
	· Worn or damaged steering joints	· Replace
	· Improperly adjusted steering pinion preload	· Adjust
	· Shock absorber malfunction	· Replace
	· Improperly adjusted wheel alignment(toe-in)	· Adjust
	· Uneven tire pressure	· Adjust
	· Deformed or unbalanced wheel	· Repair or replace
Steering wheel vibrates	· Incorrect preload of front wheel bearings or worn wheel bearings	· Replace
	· Deformed steering linkage	· Replace
	· Worn or damaged steering joints	· Replace
	· Improperly adjusted steering pinion preload	· Adjust
	· Loose gear box installation	· Tighten
	· Worn steering gear bushing	· Replace
	· Loose installation or malfunction of shock absorber	· Replace or tighten
	· Improperly adjusted wheel alignment(toe-in)	· Adjust
	· Uneven tire pressure	· Adjust
	· Abnormal tire wear	· Replace
	· Tire tread depth different(left/right)	· Replace
	· Deformed or unbalanced wheel	· Replace or balance
Excessive steering wheel play	· Incorrect front wheel bearing preload	· Replace
	· Improperly adjusted steering pinion preload	· Adjust
	· Worn steering rack and pinion	· Replace
	· Worn or damaged steering joints	· Replace
	· Improperly adjusted bevel gear preload	· Adjust
Excessive or uneven tire wear	· Incorrect wheel bearing preload(excessive play)	· Replace
	· Improperly adjusted wheel alignment(toe-in)	· Adjust
	· Incorrect tire pressure	· Adjust
	· Unbalanced wheel	· Balance
Abnormal noise from axle	· Faulty wheel bearing	· Replace

FRONT AXLE

STRUCTURAL VIEW

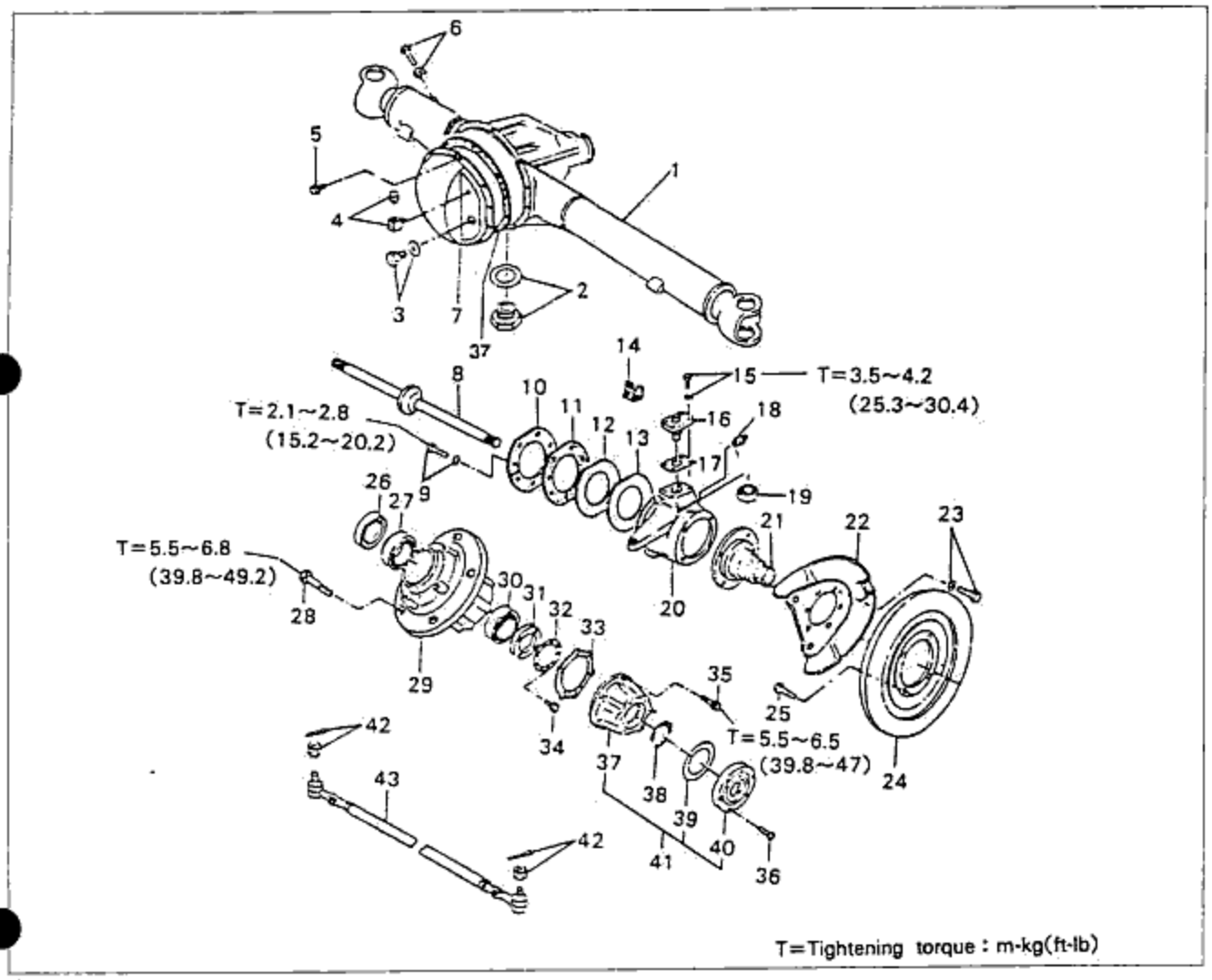

Fig. 9-2

1. Front axle casing
2. Magnet plug, packing
3. Bolt & packing
4. Air bleeder & elbow
5. Bolt & washer
6. Stop-bolt & nut
7. Cover ASS'Y
8. Shaft ASS'Y
9. Knuckle bolt & washer
10. Seal retainer plate
11. Seal
12. Knuckle oil seal
13. Seal packing ring
14. Holder ASS'Y
15. Kingpin bolt & washer
16. Kingpin
17. Shim
18. Grease nipple
19. Thrust bearing
20. Knuckle & arm
21. Spindle ASS'Y
22. Adapter ASS'Y
23. Spindle bolt & washer
24. Disc plate
25. Bolt
26. Oil seal
27. Wheel bearing
28. Hub bolt
29. Front wheel hub
30. Wheel bearing
31. Lock nut
32. Set plate
33. Gasket
34. Bolt & washer
35. Bolt
36. Screw
37. Free-wheel hub body ASS'Y
38. Ring
39. Packing
40. Free-wheel hub cover ASS'Y
41. Free-wheel hub
42. Nut & pin
43. Tie-rod ASS'Y

◈ DISASSEMBLY

1. Jack up the rear of the vehicle and support it with safety stands at the specified positions.
2. Remove the wheel and the tire.
3. Loosen the connector bolt and remove the flexible hose from the caliper assembly.

CAUTION

- **After removing the caliper assembly, don't move between pads.**

Fig. 9-3

4. Loosen the screw and remove the free-wheel hub cover assembly.

CAUTION

- **When disassembling and assembling, work it in the state of 4×2.**

Fig. 9-4

5. By pulling out ring pin and loosening the freewheel hub bolt, remove the freewheel hub body assembly.
6. While loosening the bolt and taking the set plate and lock nut by hand, remove the hub and plate.
7. By loosening the spindle bolt, remove the adapter assembly.

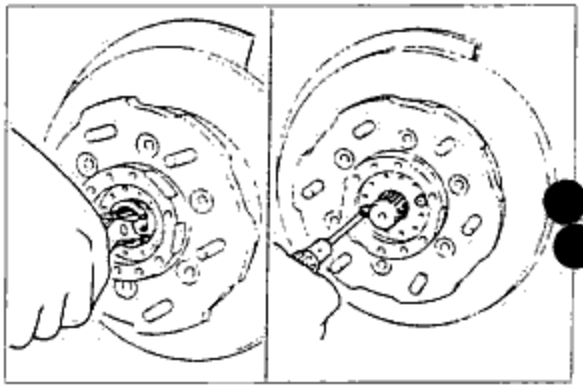

Fig. 9-5

8. After loosening pins and nuts of the tie-rod end, remove the tie-rod assembly from the knuckle by using a ball joint puller.

NOTE

- **When having some trouble in removing, tap the ball joint connection part of the knuckle with a hammer.**

Fig. 9-6

9. Remove the birfield joint assembly.

10. Loosen the knuckle bolt and remove the seal and packing.

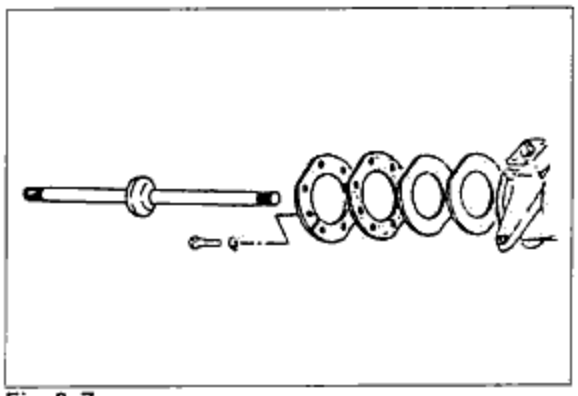

Fig. 9-7

11. After loosening the kingpin bolt and removing the holder assembly, remove the flexible hose from the hose clip.

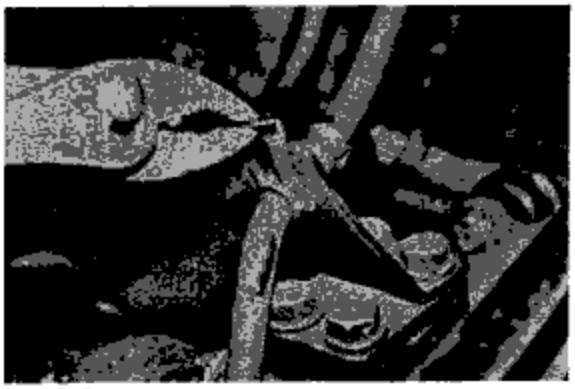

Fig. 9-8

12. After loosening the rest of kingpin bolts, and fixing bolts(M8 × 1.25) into the kingpins, remove the kingpin and adjusting shim.

Fig. 9-9

13. Disassembling the knuckle and arm, remove the stop-bolts and nuts from the casing assembly.

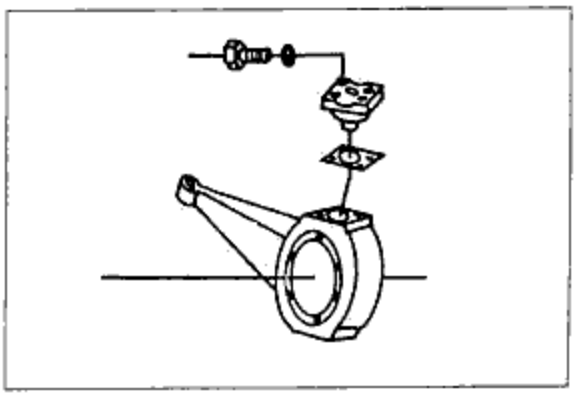

Fig. 9-10

14. Remove the bearing inner race from the yoke and pull out the outer race by putting a suitable round rod on it and by tapping the rod with a hammer.

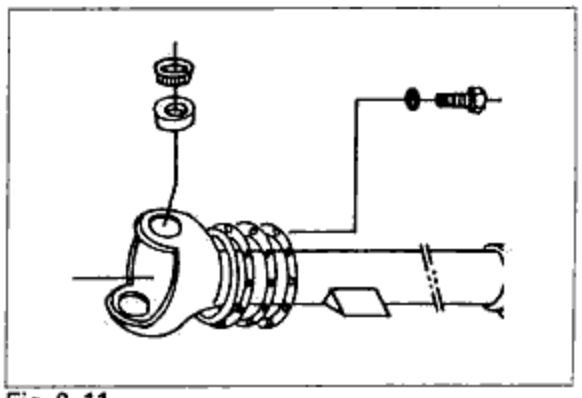

Fig. 9-11

◈ INSPECTION

Check the following items and if you find any defect, replace it.

1. Rotation state and damage of the bearing.

CAUTION

- As for bearing, replace the inner and outer race with set.
- Damage of oil seal
- Crack or damage of the hub, adherence and rust of connecting part of the bearing
- Crack or damage of the knuckle spindle, damage and rust of moving surface of oil seal
- Deformation or damage of wheel set bolt
- Crack or damage of freewheel hub

◈ ASSEMBLY

Assemble in the reverse order of disassembly.

1. Assemble the thrust bearing to the yoke.

NOTE

- After cleaning the bearing completely, apply it with grease.

2. After tightening the knuckle arm and kingpin to casing assembly(seal and packing excluded) with the specified torque, choose a suitable shim in consideration of turning torque and fix it.

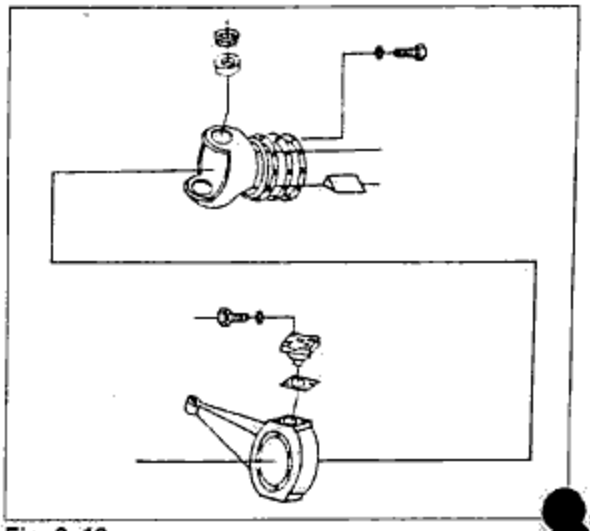

Fig. 9-12

Tightening torque:
King pin bolt : 3.5~4.2kg·m(25.3~30.4ft·lb)
Turning bolt : 41.5~61kg·cm(3~4.4ft·lb)

Shim set

Class of shim	Thickness
1	0.706mm(0.0278 in)
2	0.25mm(0.01 in)
3	0.13mm(0.005 in)

3. Fit the seal and packing, tighten the knuckle bolt to the specified torque.

Tightening torque : 2.1~2.8kg·m(15.2~20.2ft·lb)

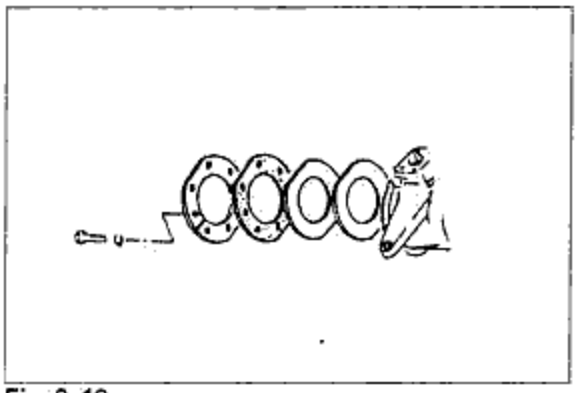

Fig. 9-13

4. Apply sufficient lithium grease to the knuckle inside, fasten the nipple grease.
5. Install the birfield joint assembly into knuckle.

CAUTION
- Be careful not to damage the oil seal.

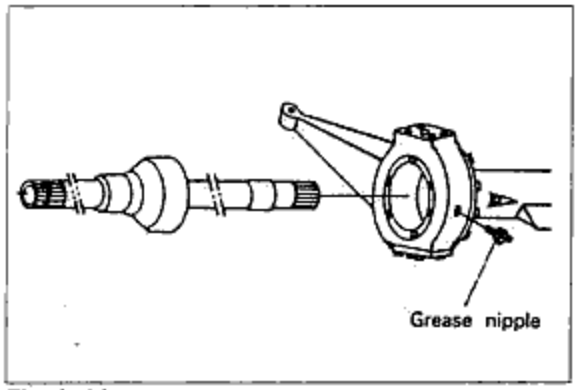

Fig. 9-14

6. Install the spindle assembly and adapter assembly, and then tighten the bolt through washer to specified torque.

Tightening torque : 3.5~5.5kg·m(25.3~39.8ft·lb)

7. After fixing the outer race into both side of the wheel hub and assembling the inner race, assemble the oil seal.

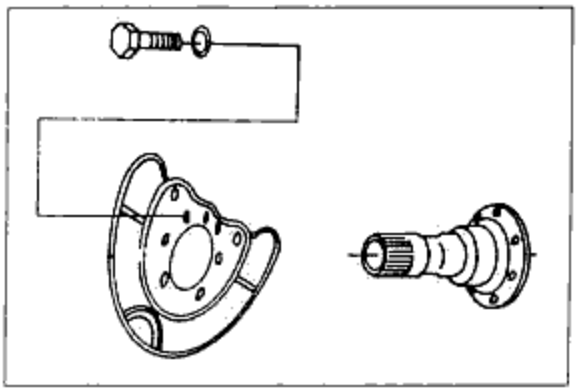

Fig. 9-15

CAUTION

- Apply the lithium grease to the lip part of oil seal and bearing.
- Oil seal should be pressed in until it contacts hub section.

8. After fixing the hub bolt to wheel hub and assembling the disc plate, tighten the bolt to the specified torque.

   Tightening torque : 5.5~6.8kg·m(39.8~49.2ft·lb)

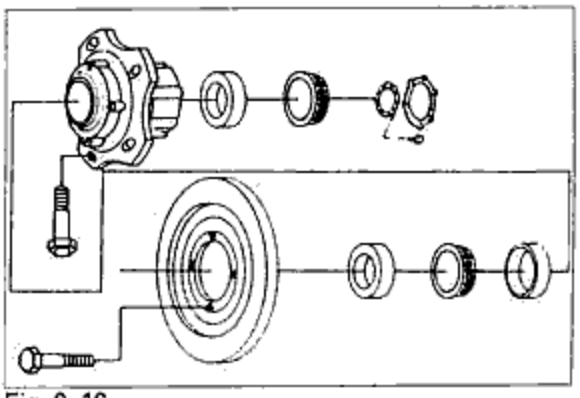

Fig. 9-16

9. After installing the hub assembly into the spindle and fixing the bearing lock nut and set plate to it, tighten the bolt to the specified torque and adjust the bearing preload.

   Tightening torque : 0.8~1.2kg·m(5.8~8.7ft·lb)
   Preload adjustment : 7~21kg·cm(0.51~1.52ft·lb)

NOTE

- Apply the lithium grease to the hub inside as shown in the figure 9-17.

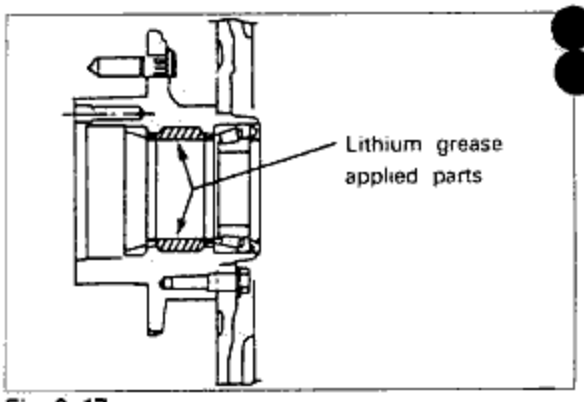

Fig. 9-17

10. After fixing the gasket and installing the freewheel hub body, tighten the bolt to the specified torque.

    Tightening torque : 5.5~6.5kg·m(39.8~47ft·lb)

CAUTION

- When assembling, apply equably silicon sealant (equal to THREE BOND #1104). when disassembling or assembling the freewheel hub, work it in the state of 4×2.

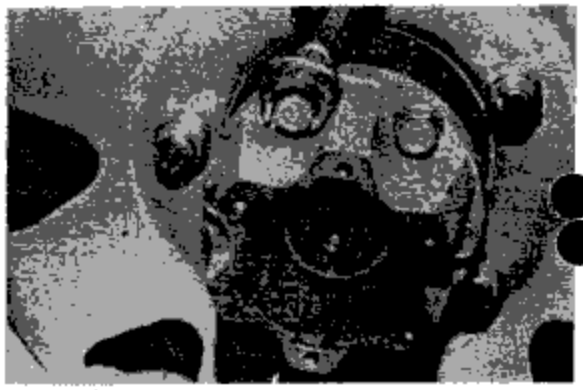

Fig. 9-18

11. After fixing the ring and assembling the packing and freewheel cover assembly and then tighten the screws.

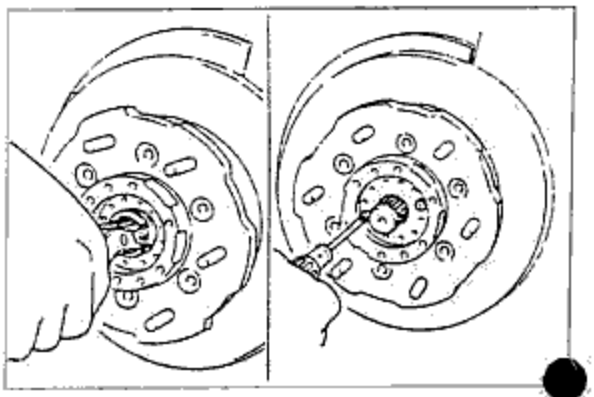

Fig. 9-19

12. Fit the nut to stop bolt and assemble the bracket part of the casing assembly.

Fig. 9-20

13. After installing the caliper assembly to adapter, tighten the brake mounting bolt fixed with a washer to the specified torque.

Tightening torque : 5.5~6.5kg·m(39.8~47ft·lb)

Fig. 9-21

14. Fit washers to both sides of flexible hose and tighten the connector bolt to the specified and fix the clip hose to holder.

Tightening torque : 2.2~3.0kg·m(15.9~21.7ft·lb)

Fig. 9-22

Fig. 9-23

15. After assembling the tie-rod assembly to knuckle arm, tighten the castle nut and fix it with a divided pin.

Fig. 9-24

REAR AXLE

STRUCTURAL VIEW

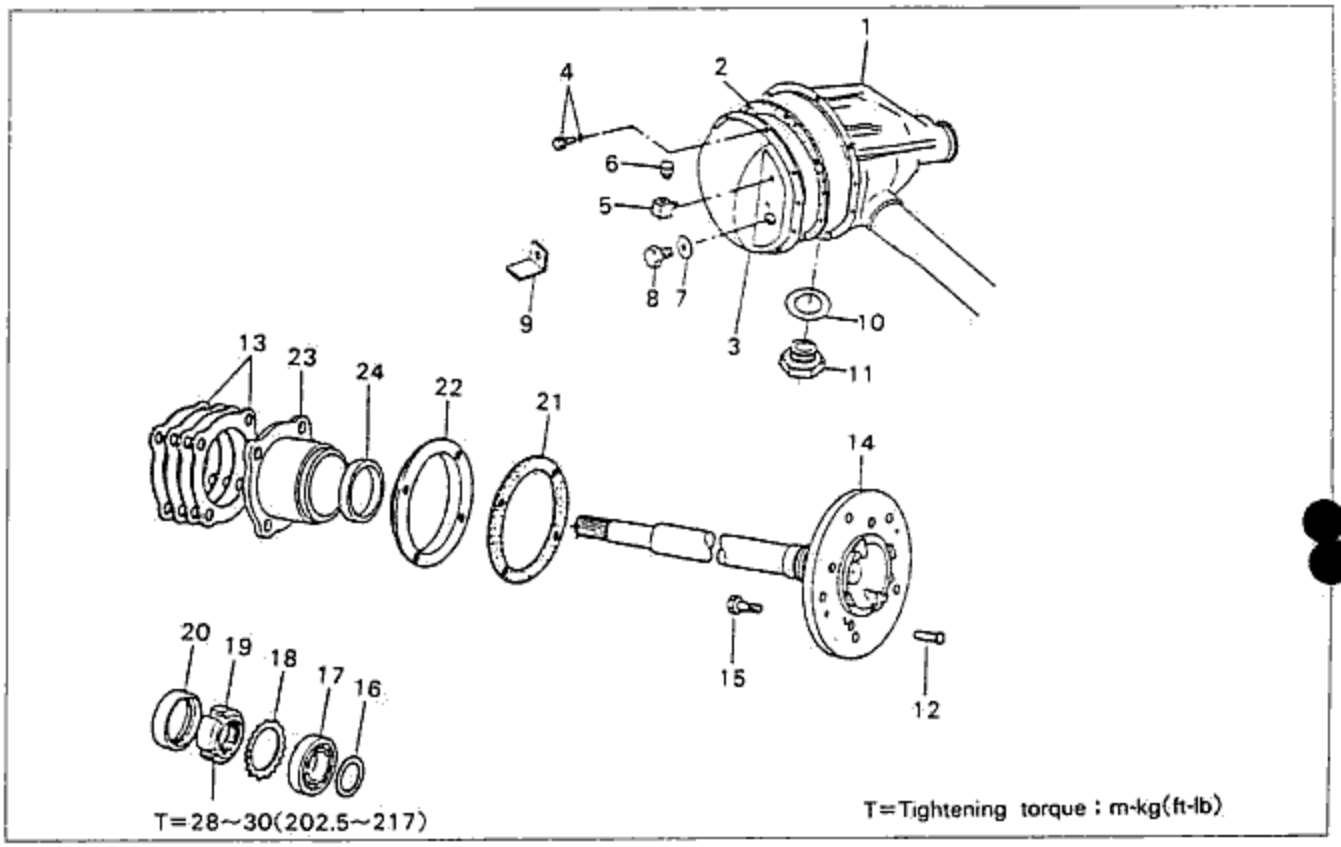

Fig. 9-25

1. Rear axle casing
2. Cover gasket
3. Cover ASS'Y
4. Bolt & washer
5. Elbow
6. Air bleeder
7. Packing
8. Bolt
9. Brake pipe bracket
10. Packing
11. Magnet plug
12. Rivet
13. Adjust shim
14. Rear axle shaft
15. Hub bolt
16. Bearing spacer
17. Rear-wheel bearing
18. Lock washer
19. Lock nut
20. Oil seal
21. Packing
22. Oil baffle
23. Bearing housing
24. Oil seal

◆ DISASSEMBLY

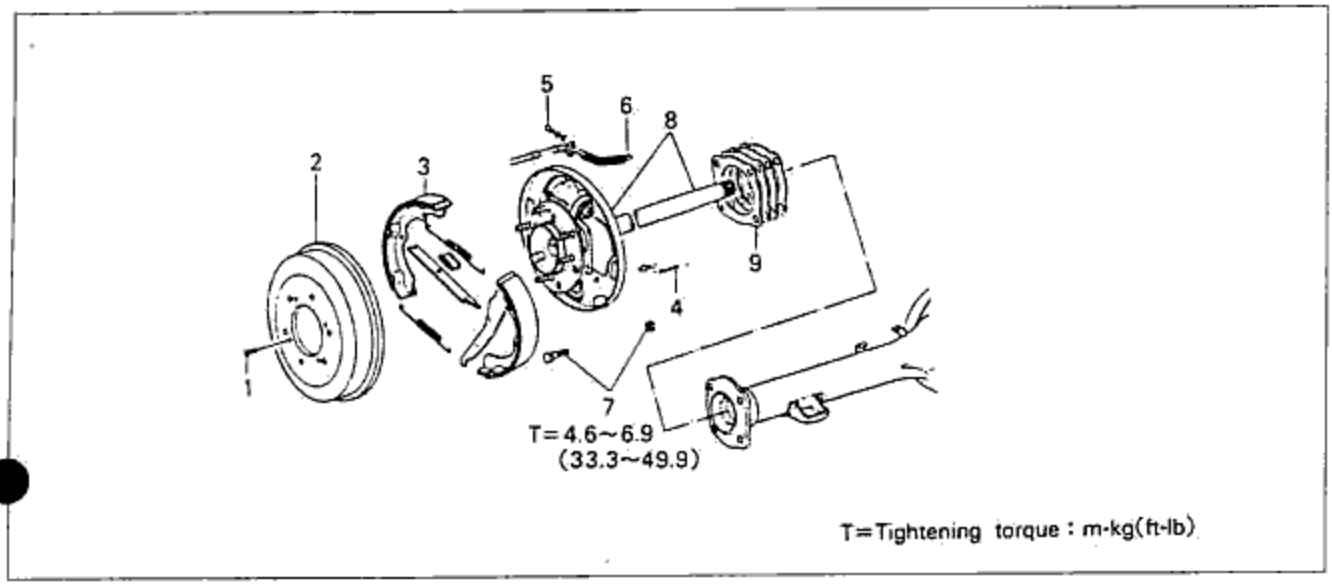

Fig. 9-26

1. Set screw
2. Brake drum
3. Brake shoe
4. Brake line
5. Screw
6. Parking brake cable
7. Back-plate mounting bolt & nut
8. Axle shaft & backplate ASS'Y
9. Shim

1. After loosening the back plate, remove the shaft and brake assembly from the casing assembly.

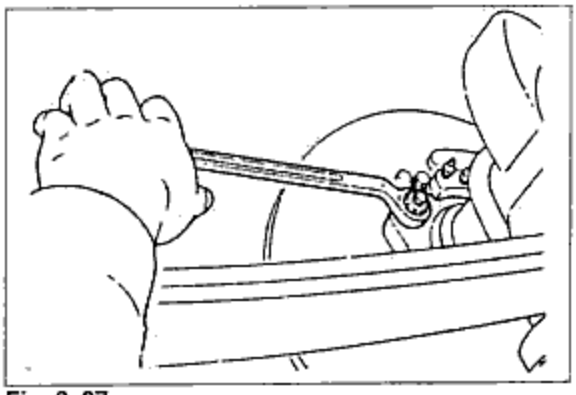

Fig. 9-27

Fig. 9-28

2. Loosen the screw and remove the drum.

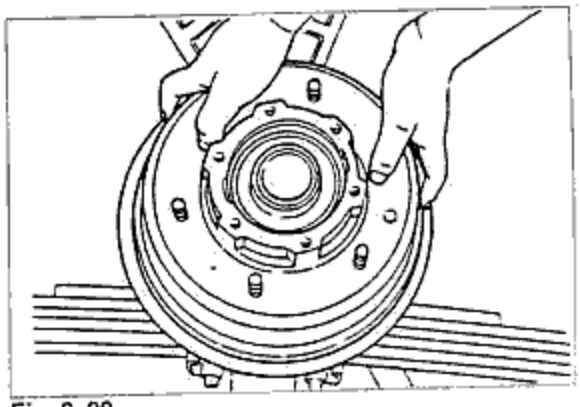

Fig. 9-29

3. Loosening the bearing lock nuts, remove the back-plate assembly and bearing housing assembly.

NOTE

- While installing or disassembling, take care as bearing lock nuts of left-side wheel are left handed screws.(turn the nuts counterclockwise for installation)

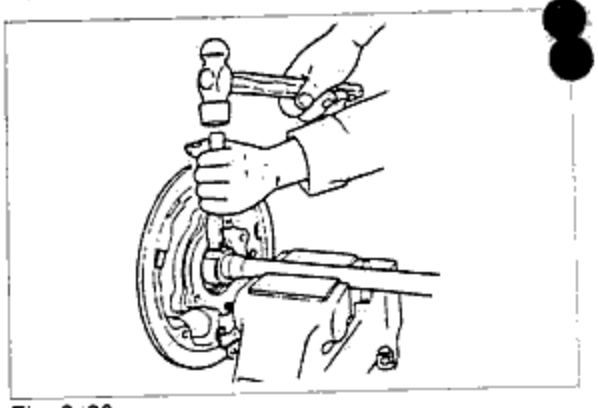

Fig. 9-30

4. Disassemble the bearing housing assembly as shown in the figure 9-31.

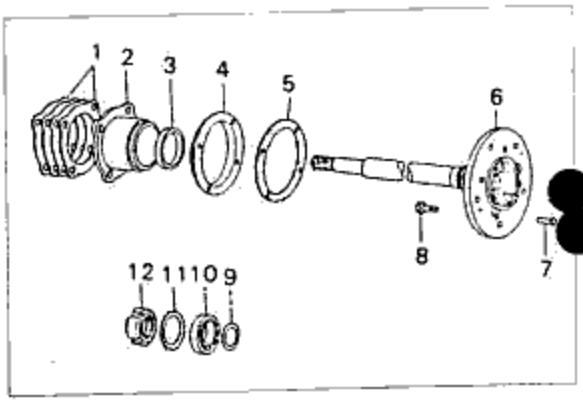

Fig. 9-31

1. Adjust shim
2. Bearing housing
3. Oil seal
4. Oil baffle
5. Packing
6. Rear axle shaft
7. Rivet
8. Hub bolt
9. Bearing spacer
10. Rear wheel bearing
11. Lock washer
12. Lock nut

The order of disassembly :
1—12—11—2—10—9—3—8—7—5—4—6

◆ INSPECTION

Check the following items, and if you find any defect with them, replace them.

1. Wear & damage of bearing
2. Wear & damage of rear axle shaft
3. Crack and damage of bearing housing
4. Wear and damage of oil seal

◆ ASSEMBLY

1. After assembling in the order of bearing housing, oil seal, bearing outer race, spacer, bearing, inner race, and lock washer as shown in the figure 9-32, tighten the lock nut to the specified torque and do calking.

   Tightening torque : 28~30kg·m(202.5~217ft·lb)

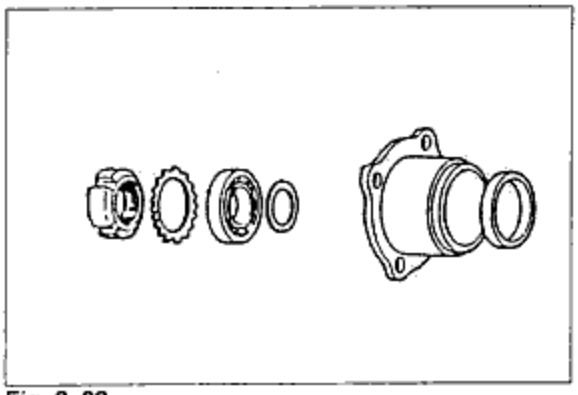

Fig. 9-32

CAUTION

- Apply grease to the lip of oil seal.
- Take care of the directions of spacer and lock washer(The arrow's indication).
- As lock nuts of left-side wheel are left-handed screws, assemble it by turning counterclockwise.
- Apply sufficient grease to the oblique line parts in the figure 9-33.

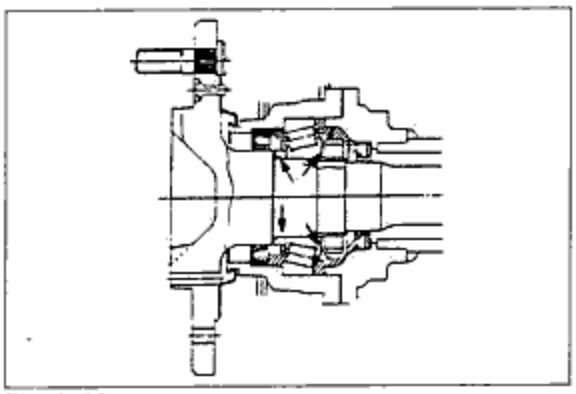

Fig. 9-33

2. Press the oil seal in axle casing by using a suitable pipe.

NOTE

- After assembling, grease up the lip of oil seal.

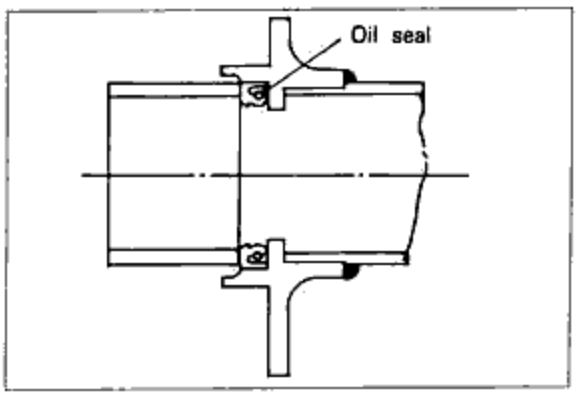

Fig. 9-34

3. After rivetting the oil baffle and packing to axle shaft, press the hub bolt in axle shaft.

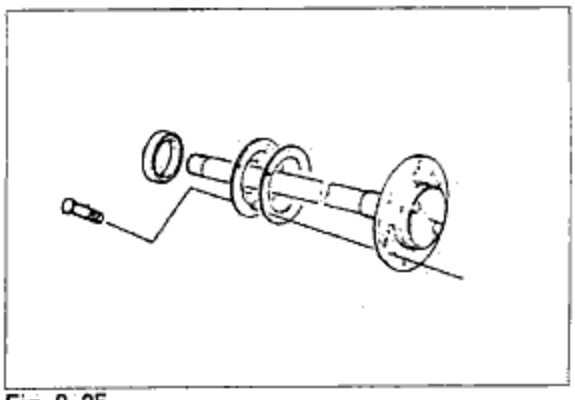

Fig. 9-35

4. Assemble the back-plate assembly and shaft assembly.
5. Adjust the bearing clearance of the axle direction of the rear axle shaft.
   ① First, put in one side of rear axle shaft assembly and install a shim into part Ⓐ so that the clearance between the shaft end and thrust block may be 0.65 to 0.85mm(0.026~0.033 in).
   ② Next, put in the other side of shaft assembly, which pushes the shaft end inside thrust block and adjust the shim of part Ⓑ so that the clearance be 0.05 to 0.15mm(0.002~0.006 in).

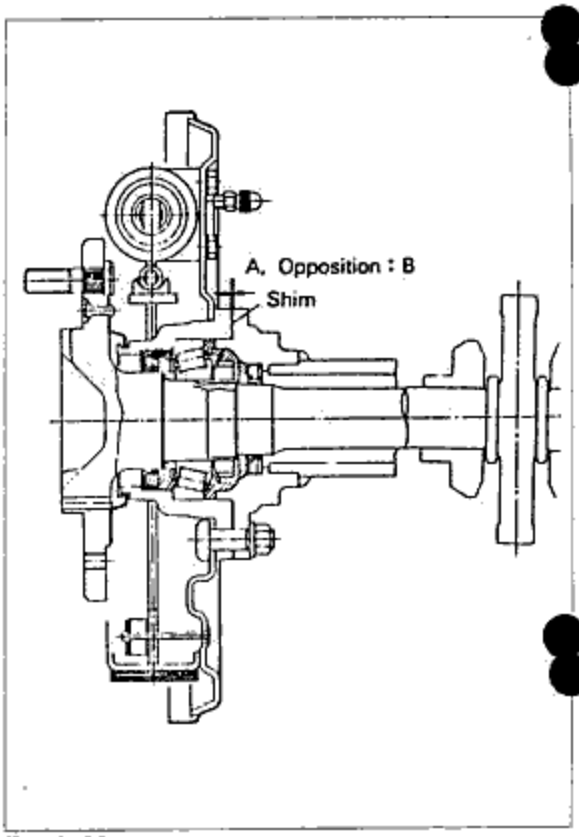

Fig. 9-36

CAUTION

- **Must not choose shims of part Ⓐ and Ⓑ at the same time.**
- **When assembling the shaft assembly with the casing, take care not to damage oil seal.**

kind of shims	Thickness mm(in)
0603 26 165	0.1 (0.004)
166	0.15(0.006)
167	0.5 (0.02)
168	0.75(0.03)

6. Tighten the spring washer and back plate mounting nuts with the specified torque.

   Tightening torque : 5.0~5.5kg·m(36~39.8ft·lb)

7. Assemble the brake drum.

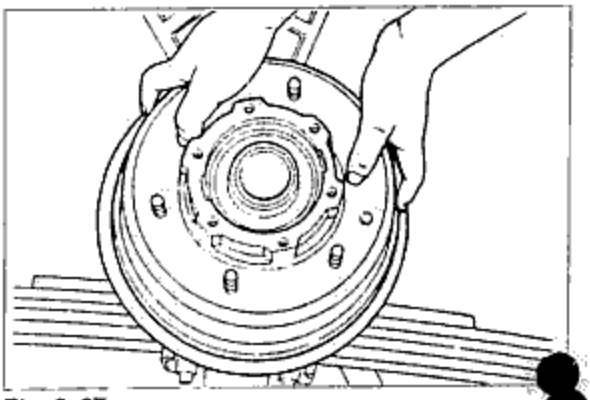

Fig. 9-37

DIFFERENTIAL

STRUCTURAL

Front differential

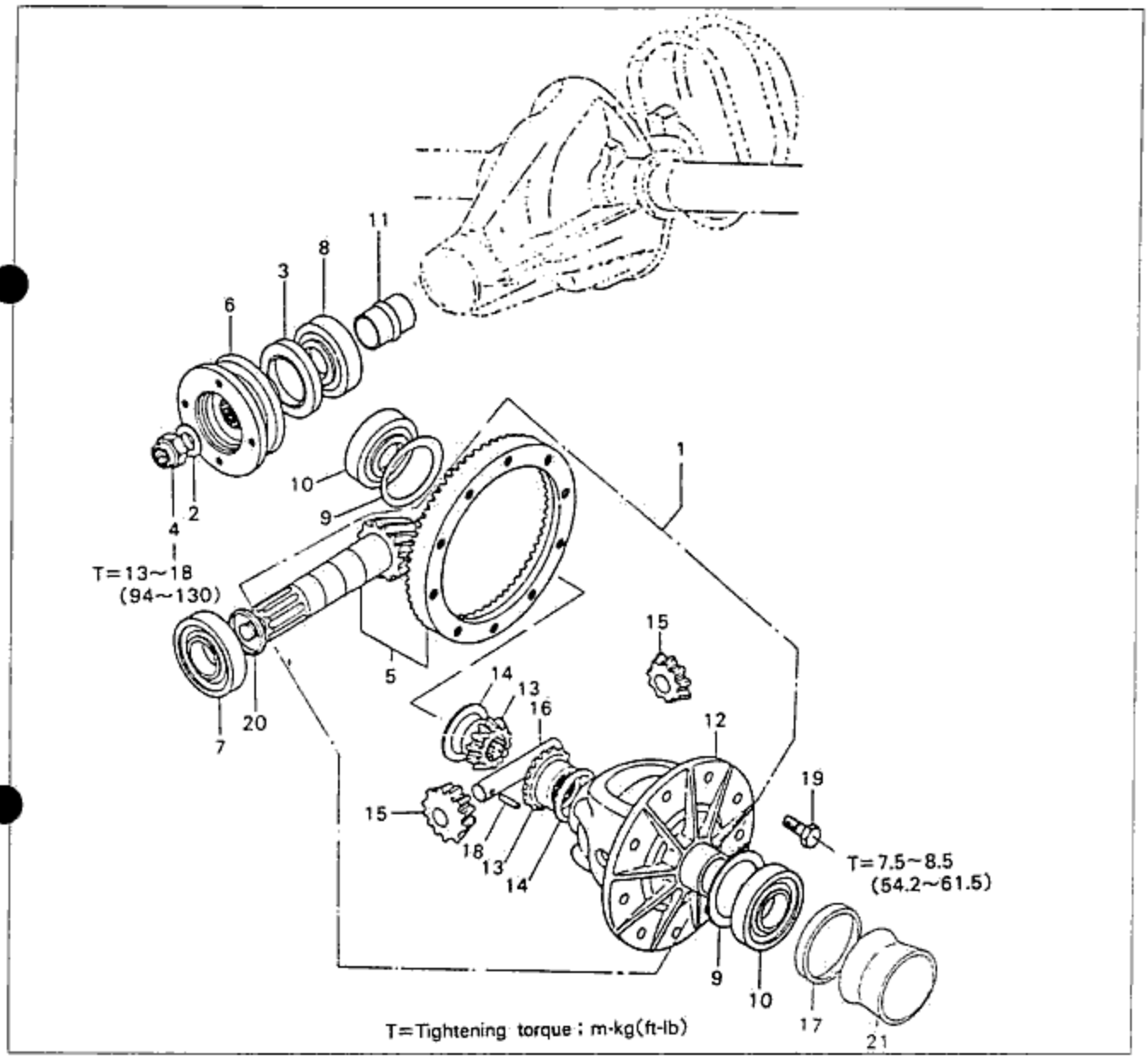

Fig. 9-38

1. Driving & differential ASS'Y
2. Drive pinion washer
3. Oil seal
4. Lock nut
5. Final gear set
6. Companion flange
7. Bearing
8. Bearing
9. Differential side shim
10. Bearing
11. Distance piece
12. Differential gear case
13. Side gear
14. Thrust washer
15. Differential pinion gear
16. Pinion shaft
17. Oil seal
18. Pin
19. Ring gear bolt
20. Spacer set
21. Shaft guide

Rear differential

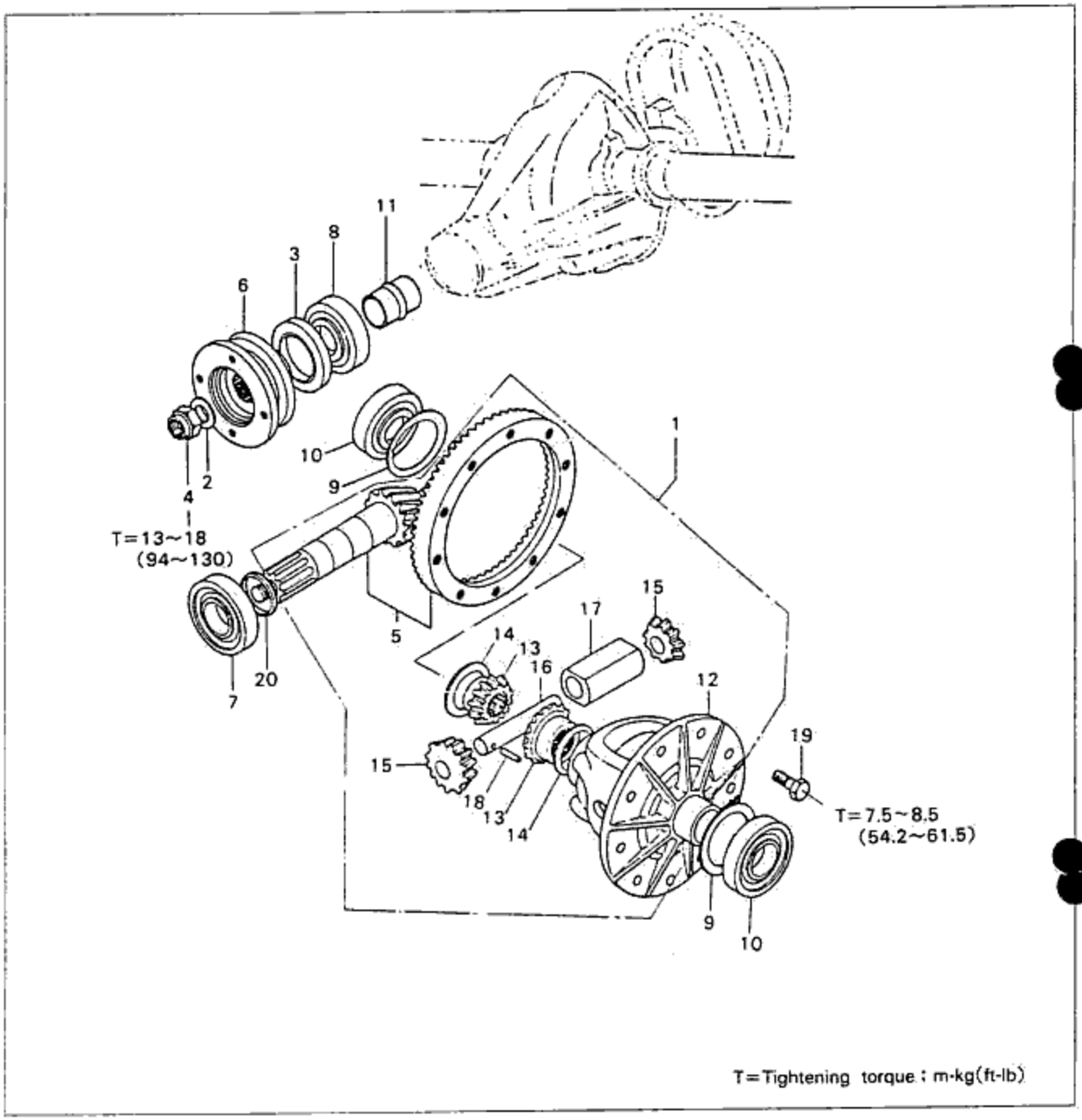

Fig. 9-39

1. Driving & differential ASS'Y
2. Drive pinion washer
3. Oil seal
4. Lock nut
5. Final gear set
6. Companion flange
7. Bearing
8. Bearing
9. Differential side shim
10. Bearing
11. Distance piece
12. Differential gear case
13. Side gear
14. Thrust washer
15. Differential pinion gear
16. Pinion shaft
17. Thrust block
18. Pin
19. Ring gear bolt
20. Spacer set

◆ DISASSEMBLY

After setting differential upon the exclusive workbench, disassemble it in the order of the number in figure 9-40.

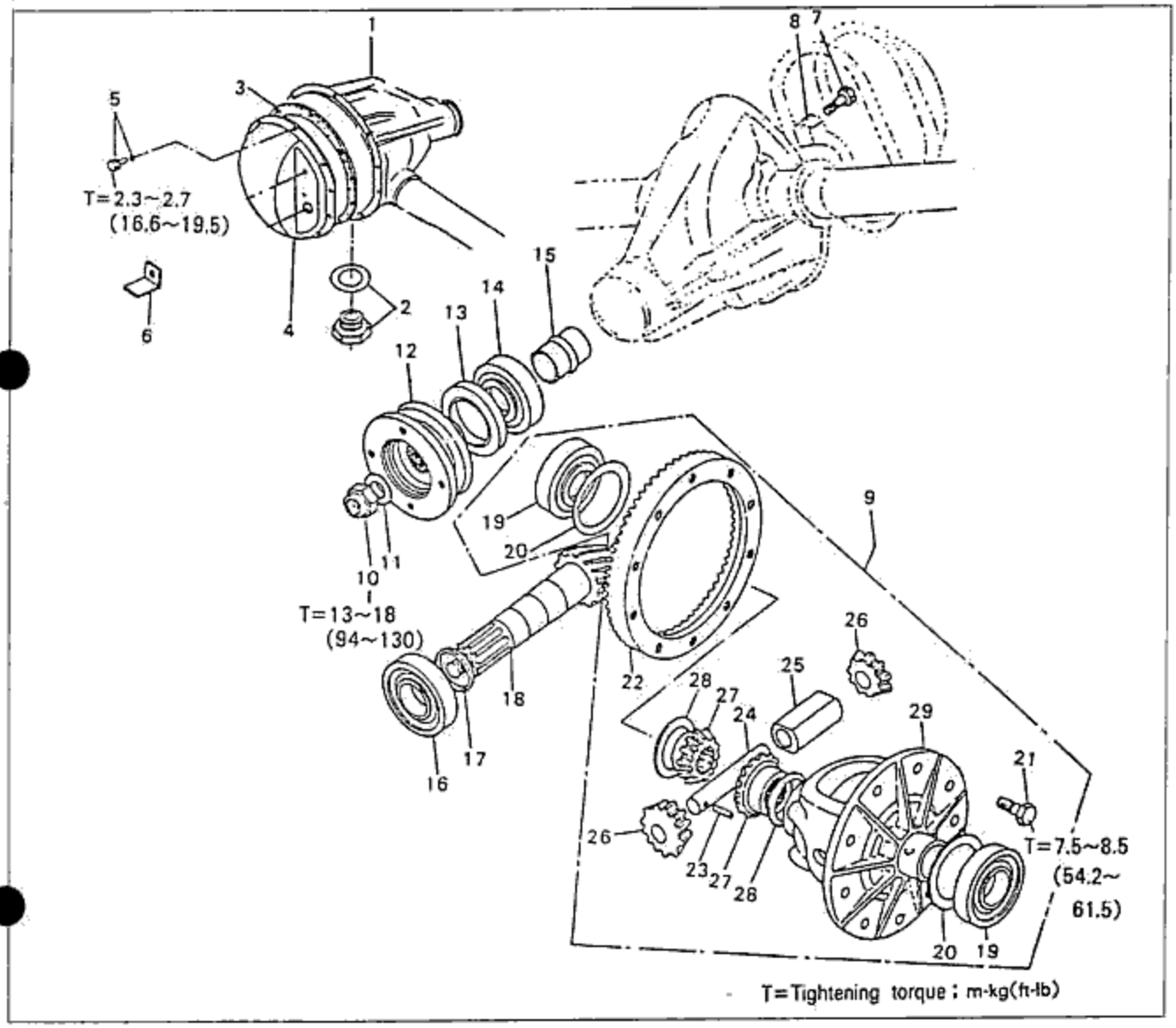

Fig. 9-40

1. Rear axle casing
2. Packing & magnetic plug
3. Cover gasket
4. Cover ASS'Y
5. Bolt & washer
6. Brake pipe bracket (Pertinent to only rear)
7. Bearing cap bolt
8. Bearing cap
9. Differential ASS'Y
10. Lock nut
11. Drive pinion washer
12. Companion flange
13. Oil seal
14. Pinion outer bearing
15. Distance piece
16. Pinion inner bearing
17. Spacer set
18. Drive pinion
19. Differential side bearing
20. Differential side shim
21. Ring gear bolt
22. Ring gear
23. Pin
24. Pinion shaft
25. Thrust block (Pertinent to only rear)
26. Differential pinion
27. Differential side gear
28. Thrust washer
29. Differential gear case

1. Mount the axle casing assembly on the work stand and remove the cover assembly.

Fig. 9-41

2. Bearing cap
   Place a mark on one of the bearing caps so that the left and right bearing caps won't get mixed.
   Use the mark for matching at the time of assembly.

Fig. 9-42

3. Lock nut
   When removing the lock nut, hold the coupling flange hold(49 S120 710) upon companion flange and remove it.

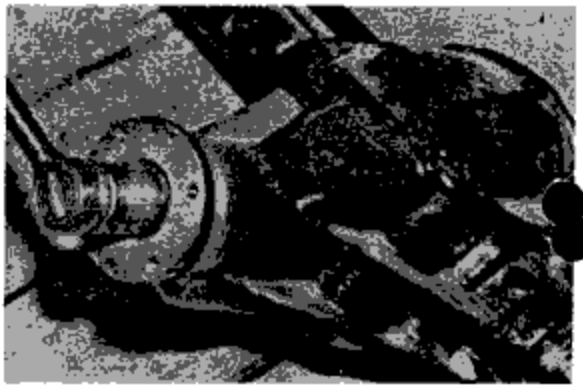

Fig. 9-43

4. Companion flange
   Remove the companion flange by pressing in method using the bearing puller set(49 0839 425C).

5. Remove the oil seal.

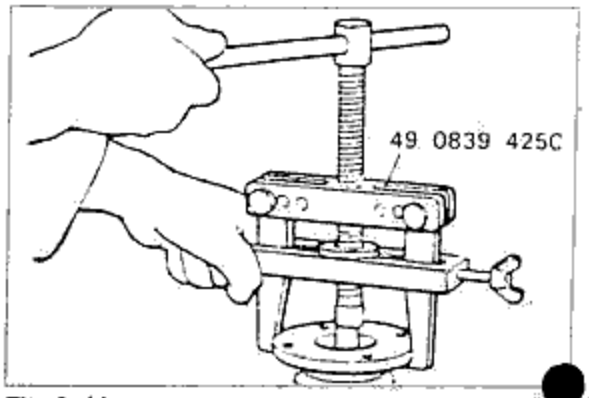

Fig. 9-44

6. Pinion outer bearing inner race. Remove the front bearing inner race by fixing a miscellaneous(unneeded) lock nut to the drive pinion, and then gently tapping it with a copper hammer.

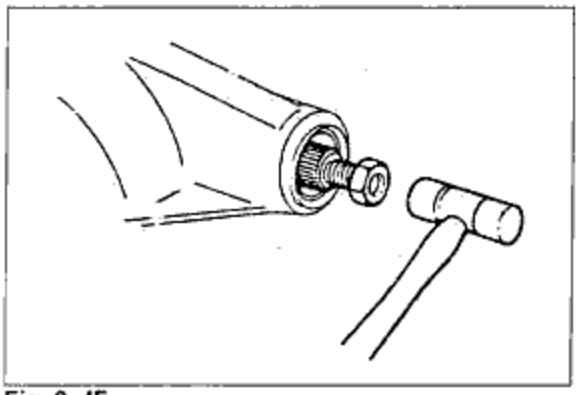

Fig. 9-45

7. Pinion inner bearing inner race.
Remove the rear bearing inner race by using the water pump boss puller(49 0636 145).

NOTE
- Support the drive by hand so that it won't fall.

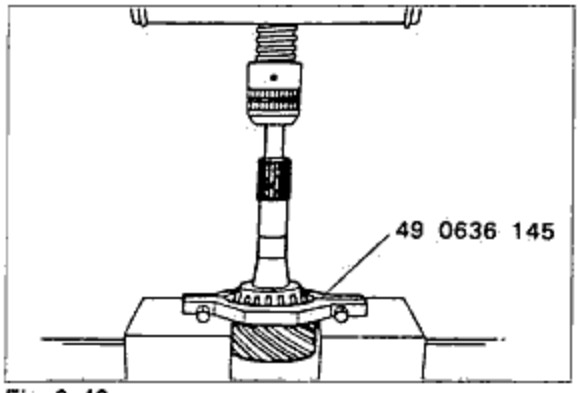

Fig. 9-46

8. Bearing outer race.
Using a suitable round bar and a hammer, remove the outer race by tapping it alternately.

NOTE
- Mark to be distinguished between the front and rear outer races so that they are not mixed at the time of reassembly.

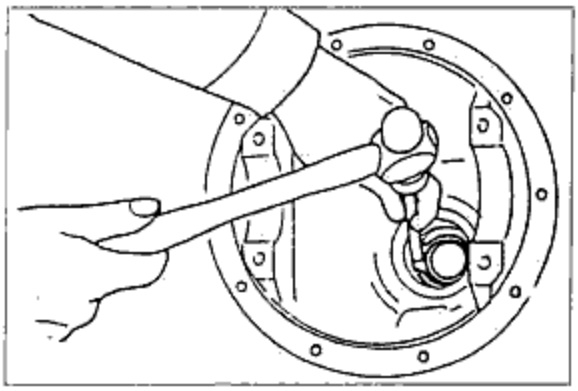

Fig. 9-47

9. Knock pin
Secure the gear case in a vise and remove the knock pin by using a bar with a diameter of 4mm (0.16 in).

CAUTION
- Insert the bar into the knock pin hole at the opposite side from where the ring gear is installed.

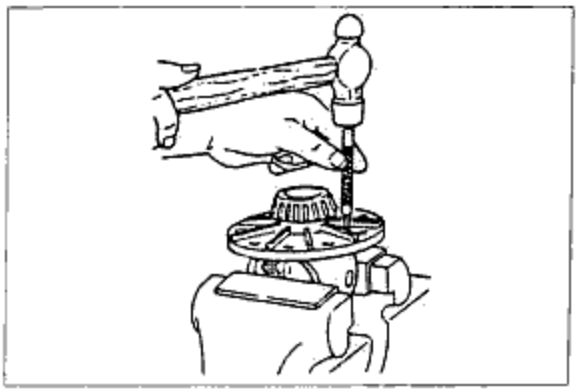

Fig. 9-48

10. Side bearings
    Using parts from the bearing puller set(49 0839 425C), remove the side bearings from the gear case.

CAUTION
- **Identify the left bearing so that it can be later reinstalled in the same position.**

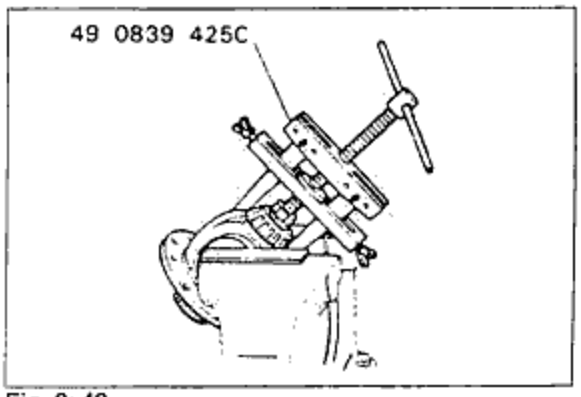

Fig. 9-49

◆ INSPECTION

Check the following points. If a problem is found, replace the part.

1. Poor meshing, wear, or damage of the ring gear or drive pinion.

NOTE
- **If there is a problem, replace the ring gear and the drive pinion as set.**

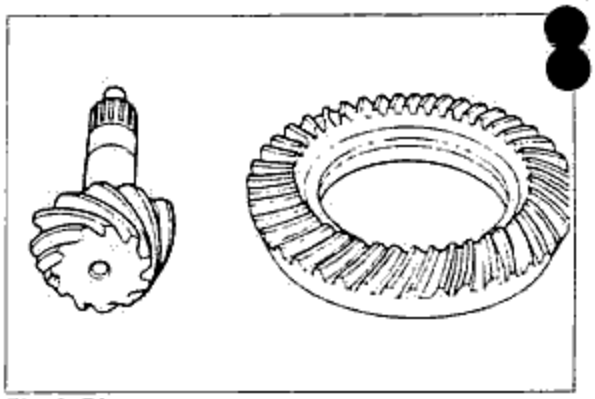
Fig. 9-50

2. Seizure, wear, rough rotation, or abnormal noise of bearing.
3. Wear or damage of side gear, pinion gear, pinion shaft, or thrust washer.
4. Cracked or worn differential carrier, wear at contact point of bearing.
5. Cracked gear case, worn sliding parts
6. Damaged or worn contact surface of companion flange oil seal

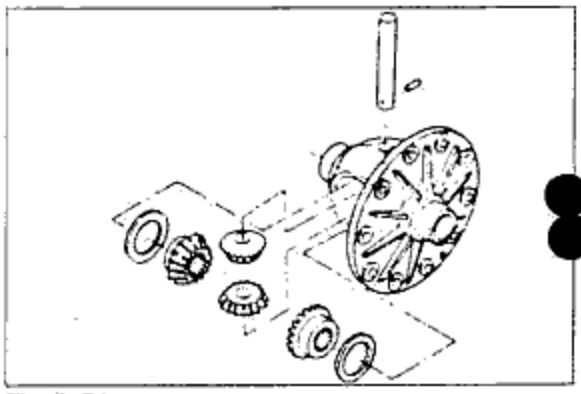
Fig. 9-51

◆ ASSEMBLY

Assemble in the following order.

1. Assemble the guide shaft and oil seal to casing assembly.

CAUTION
- **Take care not to damage the oil seal and apply lithum grease to the lip.**

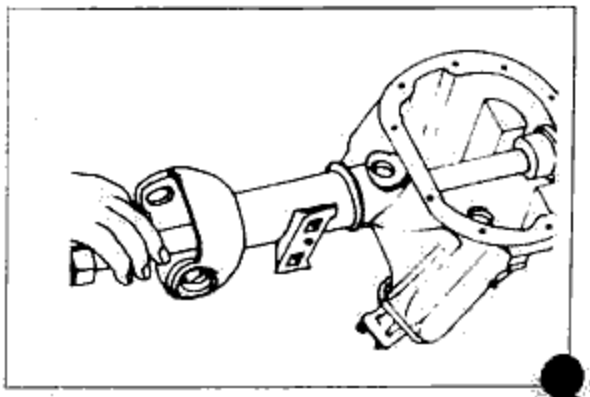
Fig. 9-52

2. Assemble the side gears, thrust washer, thrust block(if equipped), pinion gears, pinion shaft and knock pin.
   After installing the knock pin, make a crimp so that the pin will not come out of the gear case.

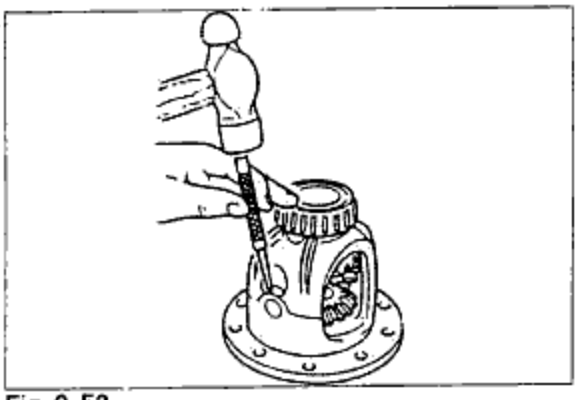

Fig. 9-53

3. After supporting the ring gear, press the side bearings into the gear case by using attachment(49 G030 338) in the bearing installer.

CAUTION

- **Bearings should be reassembled to the original positions.**

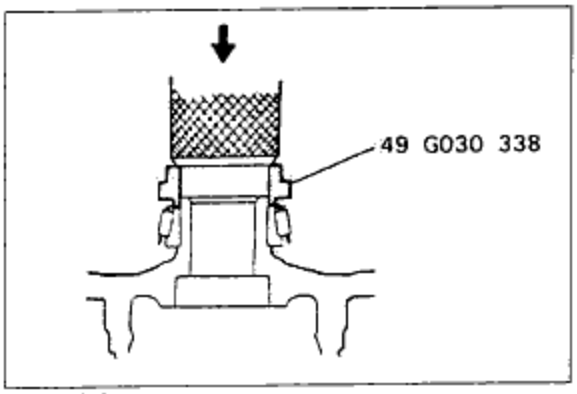

Fig. 9-54

4. Adjust the backlash of the side gears and pinion gear as follows.
   (1) Set a dial gauge to the pinion gear as shown in the figure.
   (2) Secure one of the side gears.
   (3) Move the pinion gear and measure the backlash at the end of the pinion gear.

   Standard backlash : 0~0.1mm(0~0.004 in)

   (4) If the backlash exceeds the standard, use the thrust washers to adjust.

Identification mark	Washer thickness mm(in)
0	2.0(0.079)
1	2.1(0.083)
2	2.2(0.087)

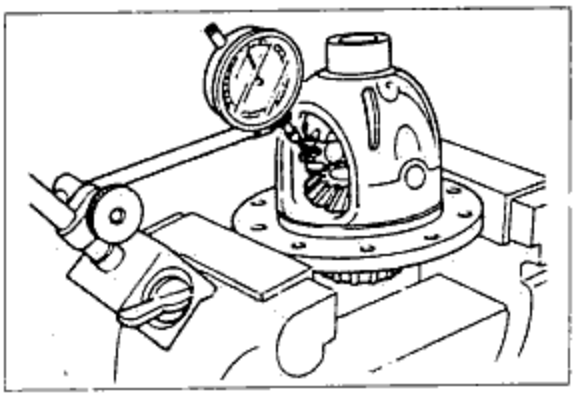

Fig. 9-55

5. Coat the ring gear and gear case facing surfaces with locking agent.
6. Install the ring gear and tighten the bolt to the specified torque.

   Ring gear tightening torque :
   7.0~8.5kg·m(51~61ft·lb)

7. Tap the front and rear bearing outer races into the carrier by using a suitable round bar and hammer.

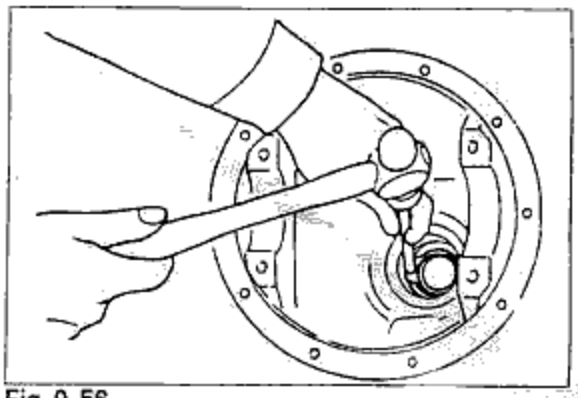

Fig. 9-56

8. Adjust the pinion height as follows by using drive pinion model(49 8531 565), pinion height adjustment gauge body(49 0727 570), and the gauge block.

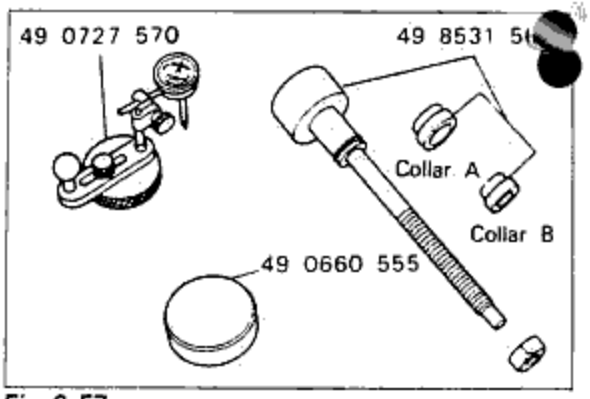

Fig. 9-57

(1) Fit the spacer, rear bearing, and collar B(40 8531 568) onto the drive pinion model(49 8531 565). Secure the collar with the O-ring. Then install this to the carrier.
(2) Attach the front bearing, collar A(49 8351 567), companion flange, washer, and nut to the drive pinion model.

NOTE
- **Use the same spacer and nut which were used before.**
- **Be careful to install collars A and B in the correct position and facing in the correct direction.**

(3) Tighten the nut to the extent that the drive pinion model can be turned by hand.

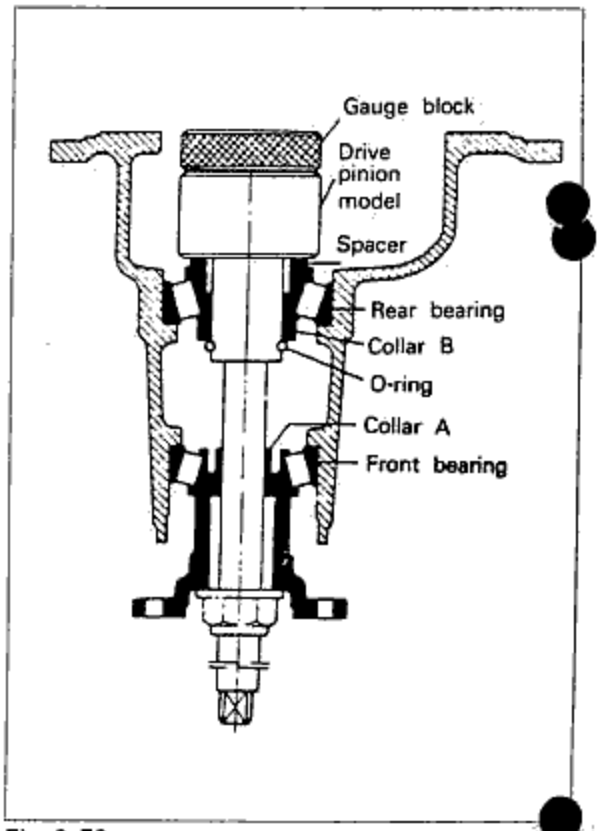

Fig. 9-58

(4) Install a dial indicator to the pinion height adjustment guage body(49 0727 570).
Place the gauge body on the surface plate and set the dial indicator to zero.

(5) Place the pinion height adjustment gauge block (49 1361 555 or 49 0660 555) on top of the drive model(49 8531 565), and then set the pinion height adjustment gauge body on top of the pinion height adjustment gauge block.

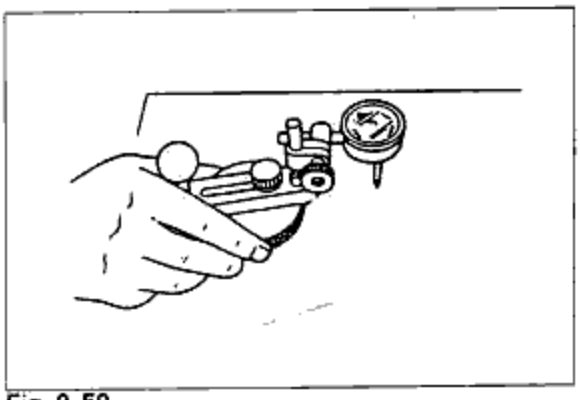

Fig. 9-59

(6) Place the measuring probe of the dial indicator so that it contacts the place where the side bearing is installed in the carrier, and measure the lowest position. Measure both the left and the right sides.

(7) Add the two(left and right) values obtained by the measurements taken in step (6), and then divide the total by 2. From this result, subtract the result obtained by dividing the number inscribed on the end surface of the drive pinion by 100.(If there is no figure inscribed, use 0.) This is the pinion height adjustment value.

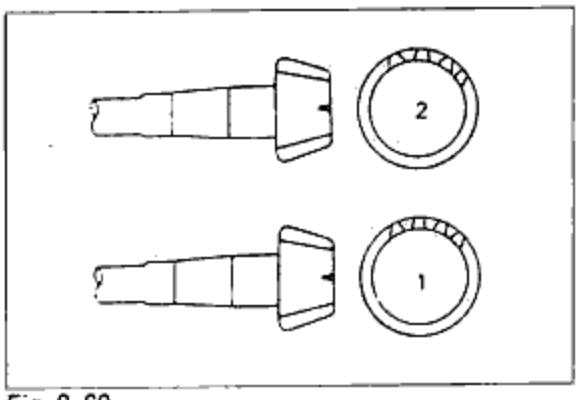

Fig. 9-60

CAUTION

- The number is inscribed by an electric marking pen.
- If, for example, the measured results obtained in step (6) are 0.06mm and 0.04mm, and the figure inscribed on the end of the drive pinion is—2 :

$$\frac{0.06+0.04}{2} - \frac{-2}{100} = 0.07 = \text{pinion height adjustment value}$$

Thus, a spacer which is 0.07mm thicker than the one now used should be used.
- Select the spacer thickness that is closest to that necessary.

Spacer

Mark	Thickness mm(in)	Mark	Thickness mm(in)
08	3.08 (0.1213)	29	3.29 (0.1295)
11	3.11 (0.1224)	32	3.32 (0.1307)
14	3.14 (0.1236)	35	3.35 (0.1319)
17	3.17 (0.1248)	38	3.38 (0.1331)
20	3.20 (0.1260)	41	3.41 (0.1343)
23	3.23 (0.1271)	44	3.44 (0.1354)
26	3.26 (0.1283)	47	3.47 (0.1366)

9. Press in the rear bearing by using :
Attachment A(49 F401 337) and body(49 F401 331) in the bearing installer set(49 F401 330).

CAUTION
- **Press in until the force required suddenly increases.**
- **Install the spacer selected for the pinion height adjustment, taking care that the installation direction is correct.**

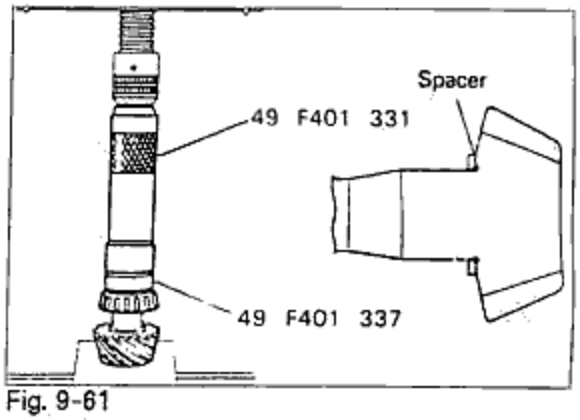

Fig. 9-61

10. Install the drive pinion, distance piece, front bearing inner race and companion flange to the carrier, and temporarily tighten the lock nut.

CAUTION
- **Do not install the oil seal.**
- **Press in the pinion bearing inner race by tightening the nut.**

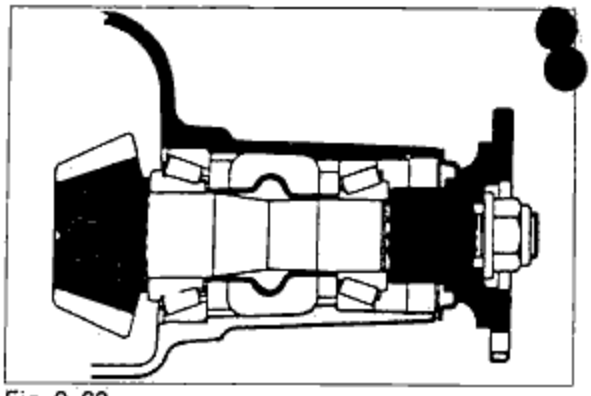
Fig. 9-62

11. Adjust the preload of the drive pinion bearing as follows.
(1) Turn the companion flange by hand to seat the bearing.
(2) Use a torque wrench to tighten the lock nut temporarily tightened is step 10, and check to be sure that the specified preload can be obtained within the specified tightening torque range.
Remember the torque applied at this time, because it will be used after the oil seal is installed.

Lock nut tightening torque :
13~18kg·m(94~130ft·lb)
Drive pinion preload :
13~18kg·cm(11.3~15.6ft·lb)

(3) If the specified preload can't be obtained within the specified tightening torque range.
Replace the collasible spacer with a new one and check again.

(4) Remove the lock nut, washer and companion flange.

(5) Tap the oil seal into the carrier by using the oil seal installer.

CAUTION

- **Oil seal installer : 49 B001 795**
- **Coat the oil seal lip with differential oil.**
- **Press the oil seal in until it reaches the end of the differential carrier.**

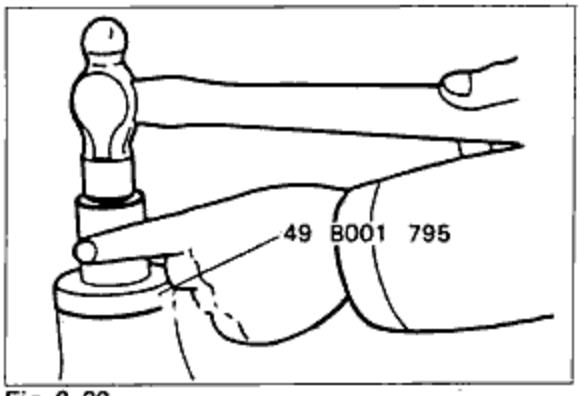

Fig. 9-63

(6) Install the companion flange and washer, and then use the flange holder(49 S120 710) to tighten the lock nut to the torque used in step (2).

CAUTION

- **Use a new lock nut.**
- **Coat the end of the companion flange with molybdenum paste.**

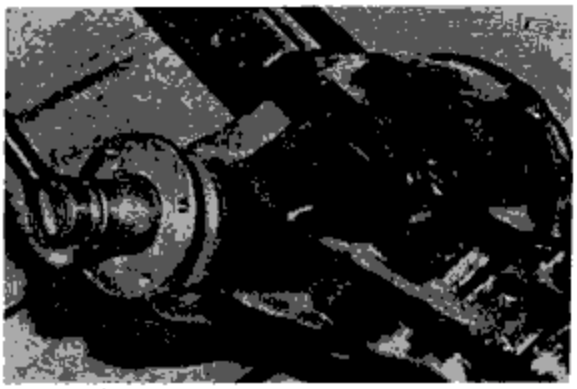

Fig. 9-64

12. Install the side bearing with a suitable shim to differential assembly and assemble it with casing assembly.

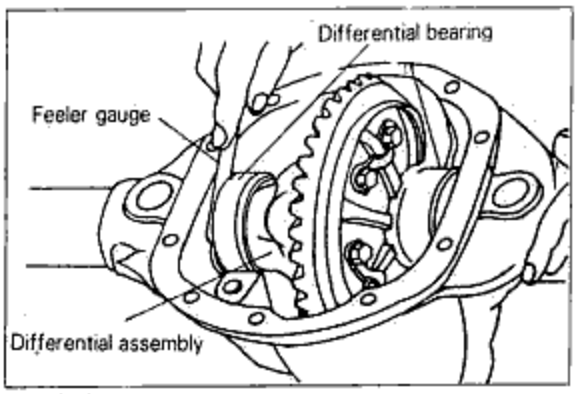

Fig. 9-65

13. Adjust the drive pinion and ring gear backlash and the side bearing preload in the following order.
    (1) Install the measuring ruler of dial gauge at a 90 angle to the end of ring gear's teeth.

Backlash : Standard : 0.09~0.11mm (0.0035~0.0043 in)
Minimum : 0.05mm(0.002 in) or more
Difference value of the maximum and minimum : 0.07mm(0.0028 in)

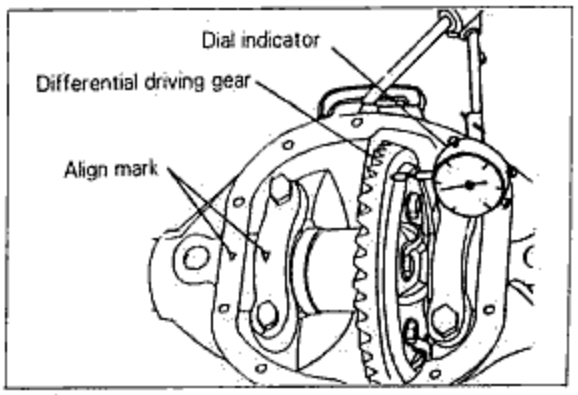

Fig. 9-66

CAUTION

- Perform the measuring of backlash by fixing the drive pinion and moving the ring gear.
- Measure the backlash at four places on the circumference of ring gear.
  If the measurement of an optional place out of 4 is within the standard, and its minimum is 0.05mm (0.002in) or more, and its shifting width 0.07mm (0.0028in), it is good. If the shifting width is more adjust it as it is possible that some foreign could be between the gear case and ring gear.
- In case the desirable standard backlash does not come to, do it again choosing suitable shims according to the below 13.

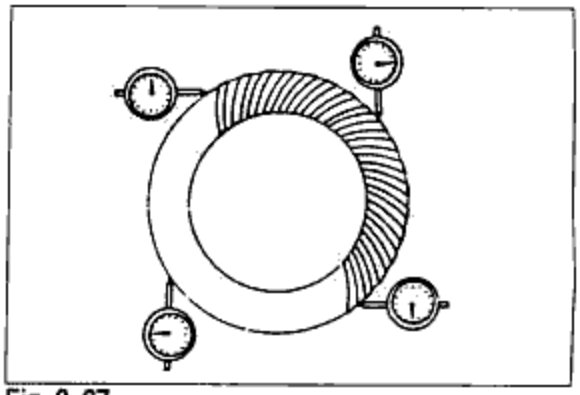

Fig. 9-67

(2) After adjusting the backlash, tighten the cap bolt to the specified torque.

Tightening torque : 3.8~5.3kg·m
(27.5~38.3ft·lb)

14. The inspection and adjustment procedure is as follows:
(1) Coat both surfaces of 6~8 teeth of the ring gear uniformly with a thin coating of red lead.
(2) While moving the ring gear back and forth by hand, rotate the drive pinion several times and check the tooth contact.
(3) If the tooth contact is good, wipe off the coating of red lead.
(4) If it is not good, adjust the pinion height, and then adjust the backlash.

(a) Toe and flank contact
Replace the spacer with a thinner one, and move the drive pinion outward.

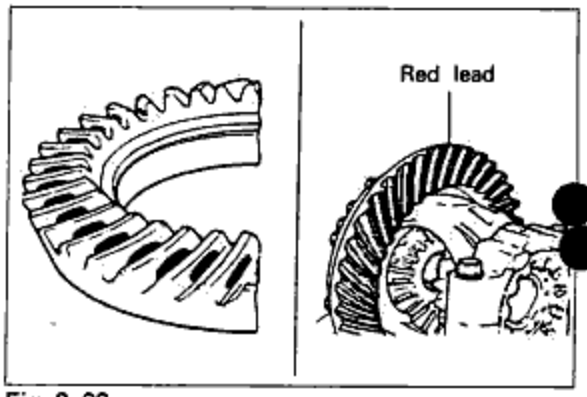

Fig. 9-68

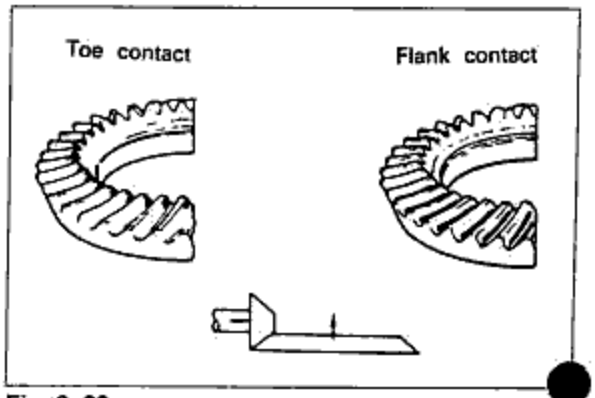

Fig. 9-69

(b) Heel and face contact
Replace the spacer with a thicker one, and bring the drive pinion closer in.

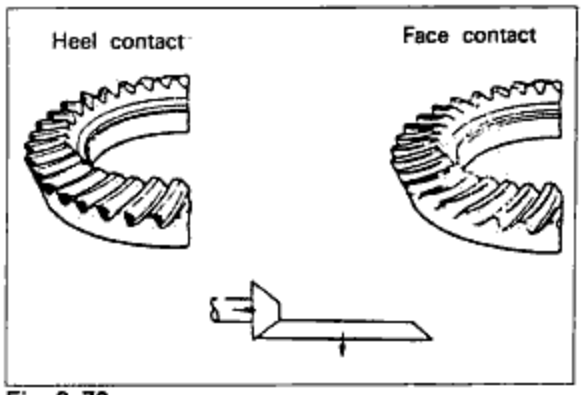

Fig. 9-70

◆ INSTALLATION

Install as follows

1. Coat the carrier's end with sealant(8527 77 739), and tighten the differential by tightening the mounting bolt to the specified torque.

   Tightening torque : 2.3~2.7kg·m(17~20ft·lb)

2. Install the propeller shaft to the differential, secure the bolt, and tighten the nut to the specified torque.

   Tightening torque : 1.9~3.6kg·m(13.7~26ft·lb)

3. Install the rear axle assembly.
4. Supply the specified amount of differential gear oil.

   Amount of oil:Fill up to the line levelled with oil filler port.

5. Bleed air from the brake lines.
6. Install the tires and lower the vehicle.

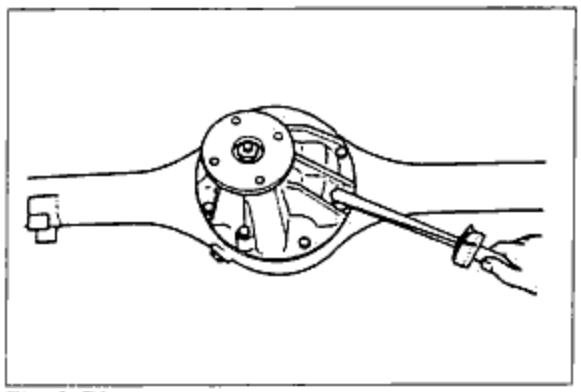
Fig. 9-71

STEERING 10

OUTLINE ..... 10—2
- STRUCTURAL VIEW ..... 10—2

SPECIFICATIONS ..... 10—3

TROUBLESHOOTING GUIDE ..... 10—3

INSPECTION AND ADJUSTMENT ..... 10—5
- STEERING WHEEL PLAY ..... 10—5
- LOOSENESS OR ABNORMAL MOVEMENT OF THE STEERING WHEEL ..... 10—5
- STEERING WHEEL EFFORT ..... 10—5
- STEERING LOWER SHAFT BOOT ..... 10—5

WHEEL ALIGNMENT ..... 10—6
- BEFORE INSPECTION ..... 10—6
- TOE-IN ..... 10—6
- STEERING ANGLE(TURNING ANGLE TO THE LEFT AND RIGHT) ..... 10—7
- CASTER, CAMBER AND KING PIN ..... 10—7

STEERING WHEEL AND COLUMN ..... 10—8
- REMOVAL ..... 10—8
- INSPECTION ..... 10—9
- INSTALLATION ..... 10—10

GEAR BOX ..... 10—10
- ON-VEHICLE INSPECTION ..... 10—10

MANUAL STEERING GEAR BOX ..... 10—12
- DISASSEMBLY ..... 10—12
- INSPECTION ..... 10—13
- ASSEMBLY ..... 10—13

POWER STEERING GEAR BOX ..... 10—15
- DISASSEMBLY ..... 10—15
- INSPECTION ..... 10—17
- ASSEMBLY ..... 10—17

POWER STEERING OIL PUMP ..... 10—19
- REMOVAL AND INSTALLATION ..... 10—19
- DISASSEMBLY AND ASSEMBLY ..... 10—19
- INSPECTION ..... 10—19

OUTLINE

STRUCTURAL VIEW

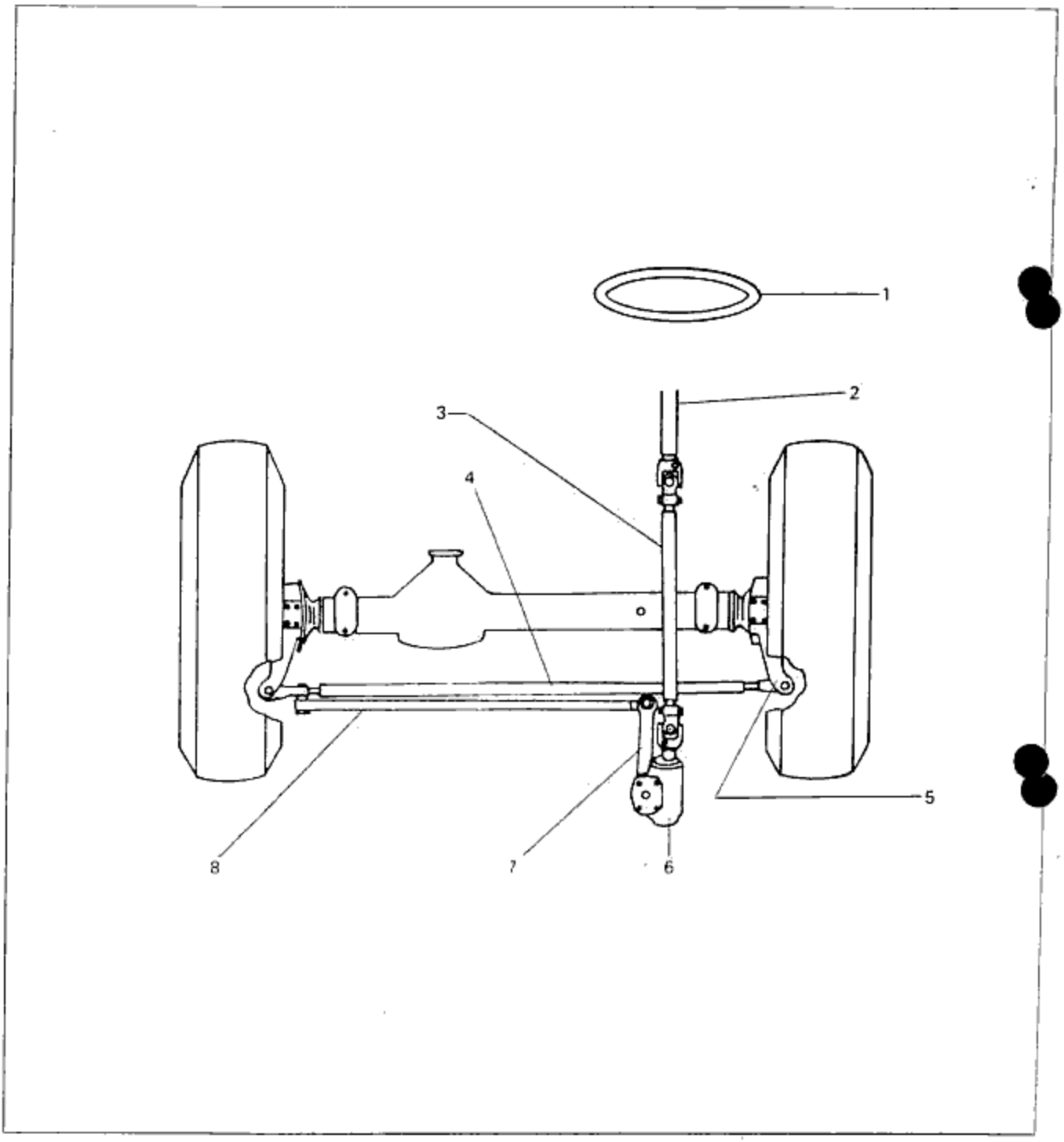

Fig. 10-1

1. Steering wheel
2. Energy absorber shaft
3. Lower shaft
4. Tie-rod
5. Knuckle arm
6. Steering gear box
7. Pitman arm
8. Drag rod

SPECIFICATIONS

Items		Specifications
Steering wheel	Outer diameter	390mm(15.35in)
	Maximum revolutions of steering wheel	Manual steering : 3.8 Power steering : 2.5
Gear	Type	Ball nut type
	Gear ratio	Manual steering : 21~25 Power steering : 15.2
Steering angle	Inside	29°
	Outside	27°
Booster(GT SPEC.)	Type	Integral type
	Oil used	DEXRON II, FORD TYPE(M2C 33F)
	Oil capacity	2 ℓ (2.11 us.quarts, 1.76 Imp quarts)
Wheel alignment	Kingpin(Angle)	8° 30′ ±30′
	Caster(Angle)	Manual steering : 6° Power steering : 7°30′
	Camber(Angle)	30′
	Toe-in	1~2mm(0.04~0.08in)

TROUBLESHOOTING GUIDE

Problem	Possible cause	Correction
Steering wheel is too heavy to operate. Jack up the front end of vehicle, keeping both left and right tires off the ground and operate the steering wheel.	If light · Insufficient tire air pressure · Excessively uneven wear of tire If heavy · Faulty lubrication, presence of foreign matters and abnormal wear of ball joints of steering system · Stuck or damaged ball joint of steering system · Improper adjustment of preload of steering worm shaft · Damaged steering gear · Worn or damaged steering bushing · Insufficient oil in gear box · Stuck king-pin · Insufficient king-pin oil	· Adjust · Replace · Lubricate or replace · Replace · Adjust · Replace · Replace · Lubricate · Replace · Lubricate
Incorrect steering wheel balance.	· Deformed steering linkage · Improper adjustment of preload of front wheel bearing · Fatigued front springs · Deformed knuckle arm · Dragging brakes · Twisted front axle · Faulty wheel alignment(toe-in) · Unevenly worn tire (Left and right tires are worn unevenly)	· Replace · Adjust · Replace · Replace · Adjust · Replace · Adjust · Replace

Problem	Possible cause	Correction
Unstable driving	· Deformed steering linkage	· Replace
	· Worn or damaged joints of steering system	· Replace
	· Improper adjustment of preload of steering worm shaft	· Adjust
	· Improper adjustment of preload of front wheel bearing	· Adjust
	· Fatigued front spring	· Replace
	· Loose U-bolts	· Tighten
	· Malfunctioning of shock absorber	· Replace
	· Faulty wheel alignment(toe-in)	· Adjust
	· Improper adjustment of tire air pressure	· Adjust
	· Deformed or unbalanced wheels	· Repair or replace
Steering wheel vibrates	· Improper adjustment of preload of wheel bearing or worn wheel bearing	· Adjust or replace
	· Deformed steering linkage	· Replace
	· Worn or damaged joint of steering system	· Replace
	· Improper adjustment of preload of steering worm shaft	· Adjust
	· Loose gear box mounting bolts	· Tighten
	· Worn steering bushing	· Replace
	· Worn king-pin	· Replace
	· Faulty wheel alignment(toe-in)	· Adjust
	· Improperly adjusted tire air pressure	· Adjust
	· Unevenly worn tires	· Replace
	· Depth of tire tread is different between left and right tires	· Replace
	· Deformed or unbalanced wheels	· Repair or replace
	· Malfunctioning or loose shock absorbers	· Replace or tighten
	· Loose U-bolt	· Tighten
Excessive play of steering	· Improper adjustment of gear box backlash	· Adjust
	· Worn steering gear	· Replace
	· Worn or damaged joint of steering system	· Replace
	· Worn king-pin	· Replace
	· Improper adjustment of preload of front wheel bearing	· Adjust
Faulty stability of steering wheel	· Stuck or damaged joint of steering system	· Replace wheel
	· Faulty front wheel alignment(toe-in)	· Adjust
	· Improper adjustment of preload of steering worm shaft	· Adjust
	· Improper adjustment to tire air pressure	· Adjust
Noise from steering system	· Loose or worn steering linkage	· Tighten or replace
	· Worn joint of steering system	· Replace
	· Improper adjustment of gear box backlash	· Adjust

INSPECTION AND ADJUSTMENT

STEERING WHEEL PLAY

With the wheels in the straight-ahead position, gently move the steering wheel to the left and right and check whether the play is within the standard value range.

Play : 5~25mm(0.196~1.181 in)

NOTE

- **If the play exceeds the standard value range, either the steering joints are worn or the backlash of the steering gear is excessive.**

Fig. 10-2

LOOSENESS OR ABNORMAL MOVEMENT OF THE STEERING WHEEL

Move the steering wheel in the directions ①②③ indicated in the figure to check for any of the following conditions:column bearing wear, abnormal steering shaft joint movement, steering wheel looseness, or column looseness.

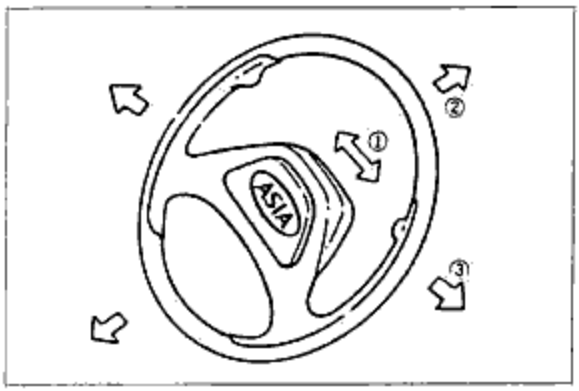

Fig. 10-3

STEERING WHEEL EFFORT

Jack up the vehicle and move the steering wheel to put the wheels in the straight ahead position.
Attach a spring gauge to the outer circumference of the steering wheel, and then, starting with the wheels in the straight-ahead position, check the steering effort required to turn the steering wheel to the left and to the right.

Steering wheel effort : 0.5~2kg(1.1~4.4lb)
(during on turn of the steering wheels)

NOTE

- **By turning steering wheel to the left or to the right 5 times or more, measure it.**
  If the value measured above is not included in the standard value, check the following items:Rotation start torque of pinion, rotation torque of each ball joint, joint trouble, etc.

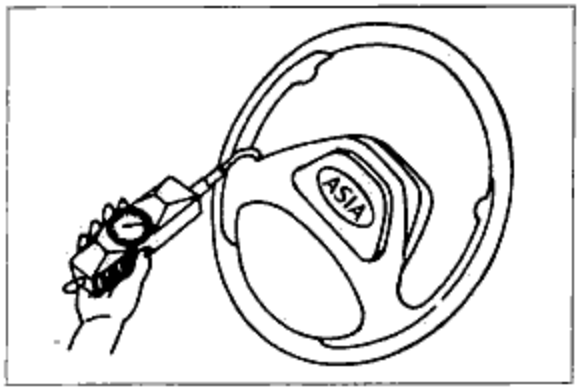

Fig. 10-4

STEERING LOWER SHAFT BOOT

Check the boot for cracking or other damage. If a problem is found, replace the part.

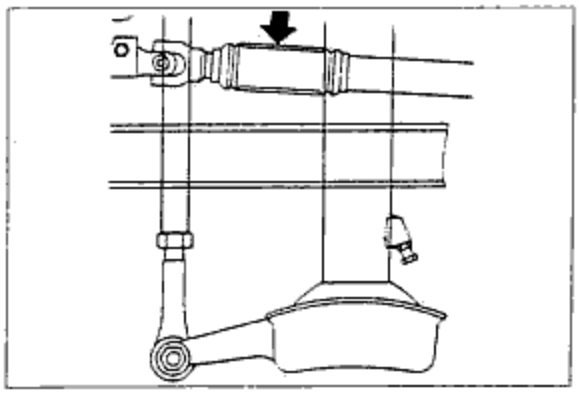

Fig. 10-5

WHEEL ALIGNMENT

BEFORE INSPECTION

1. Park the vehicle(unloaded) on a level surface with the wheels in the straight-ahead position.
2. Adjust the tires to the correct air pressure, and if necessary, correct the deflection of the tires and disc wheels.
3. Be sure that the condition of the front suspension and the steering is correct, and that vehicle is level.

TOE-IN

1. Inspection
   Use a toe-in gauge to measure the toe-in.

   CAUTION
   - **As shown in the figure, the points to be measured are:(A) the distance between the center of the front of the tread on the left and right front tires, and (B) the distance between the center of the rear the tread on the same tires. The toe-in can be considered satisfactory if the difference between these distances is less than 3mm(0.12in).**
   - **If the difference is not within that limit, adjust the toe-in.**

   Toe-in : 1~2mm(0.04~0.08 in)

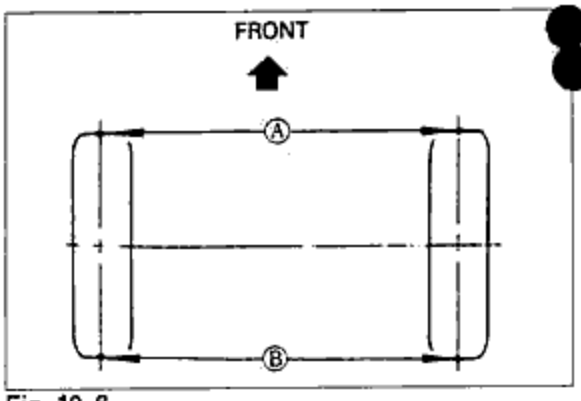

Fig. 10-6

2. Adjustment
   (1) To adjust the toe-in, loosen the left and right tie-rod lock nuts and turn the tie-rods by equal amounts.
   (2) When adjusting the tie-rod toward turn the tie-rod in the reverse direction of the vehicle's advance.
   (3) The toe-in changes by about 3mm(0.12in) for each full turn of the tie-rods.
   (4) Tie rod lock nut

   Tightening torque : 9~12kg·m(65.1~86.8ft·lb)

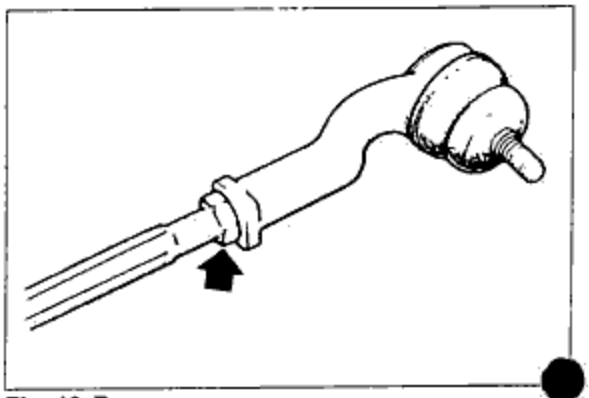
Fig. 10-7

◈ STEERING ANGLE(TURNING ANGLE TO THE LEFT AND RIGHT)

1. Inspection

(1) The steering angle is measured by placing the front wheels on a turning-radius gauge.

2. Adjustment

(1) The steering angle is adjusted by loosening the tie-rod lock nuts and turning the tie-rods.

Steering angle : Inner 29°, Outer 27°

(2) Adjust so that left and right steering angle is the same.

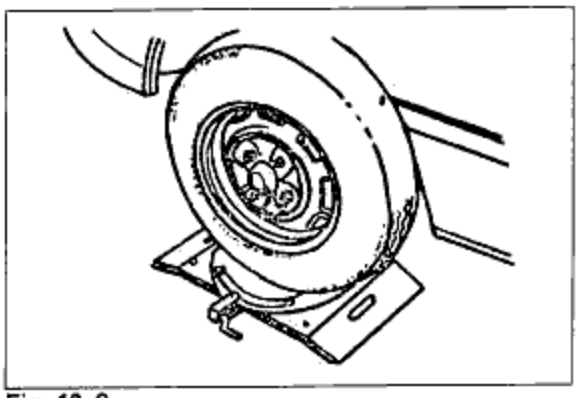

Fig. 10-8

◈ CASTER, CAMBER AND KING PIN

1. Inspection

(1) The camber and caster are measured by placing the front wheels on a turning-radius gauge. Proceed in the following order.

① After removing the drive-shaft lock nut, attach the caster/camber gauge adaptor(49 0259 605A) to the wheel hub as shown in the figure and place.

② Attach the king pin/camber gauge to the adaptor, and then measure the camber, caster and king pin.

CASTER ANGLE:7°30′ (Power steering),
6° (Manual steering)
CAMBER ANGLE:30′
KING PIN ANGLE:8°30′ ±30′

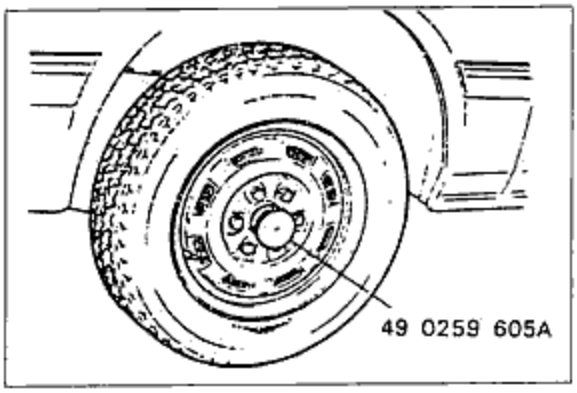

Fig. 10-9

2. Adjustment

(1) The camber can't be adjusted, but check the warp of the front axle, wear of the king pin & king pin bush and wear of the front hub bearing etc. and then adjust them.

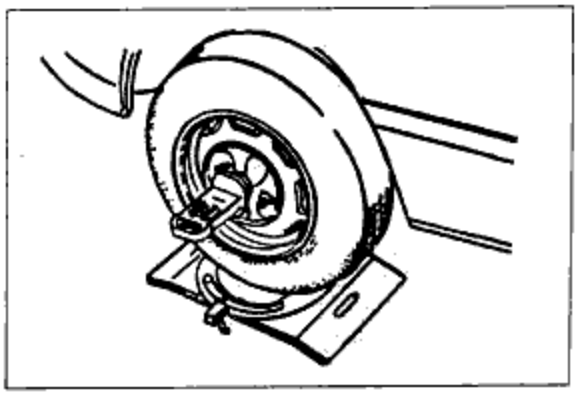

Fig. 10-10

STEERING WHEEL AND COLUMN

REMOVAL

After removing the battery ⊖ terminal, remove each part in the numbered order shown in the figure.

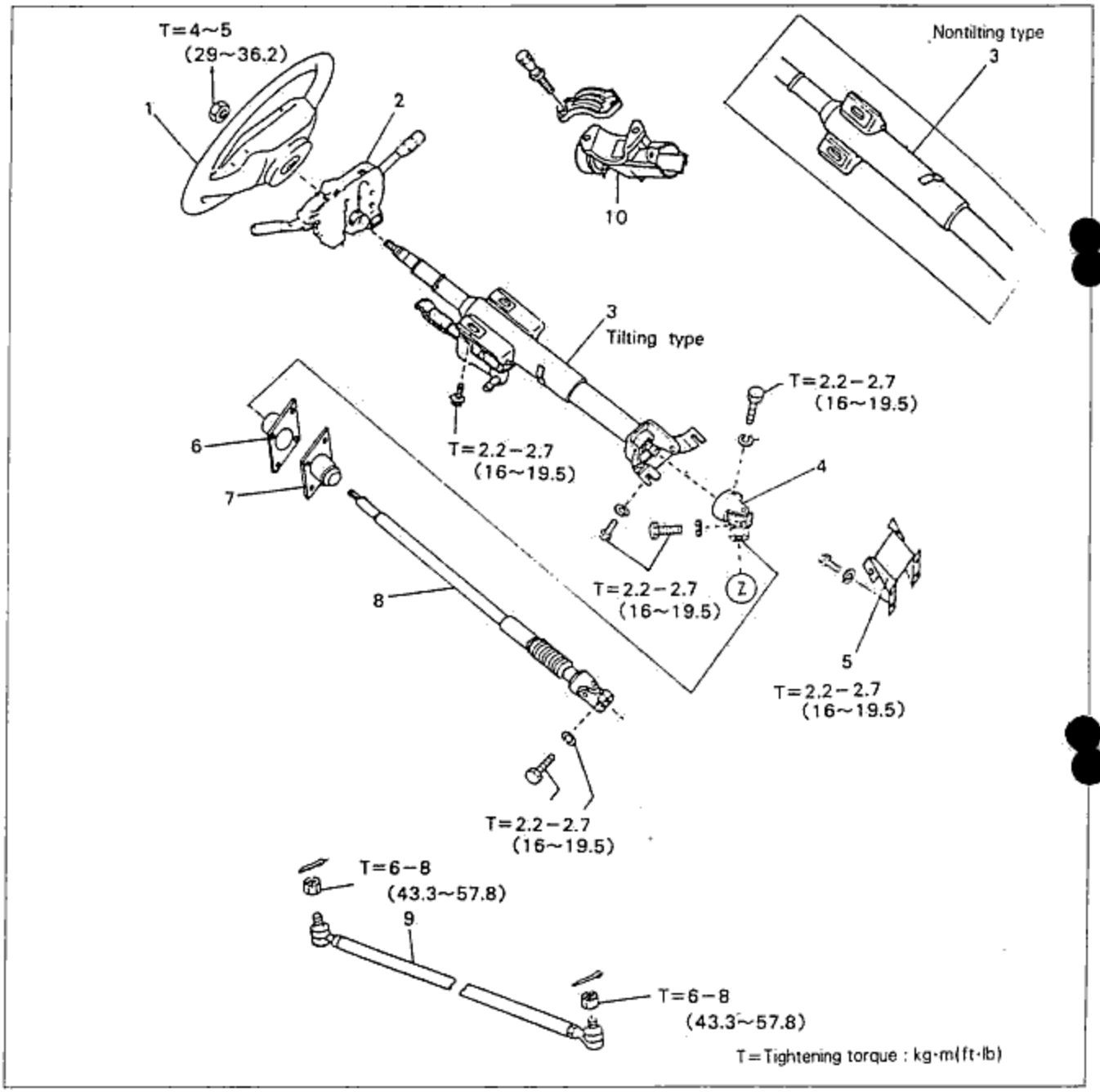

Fig. 10-11

1. Steering wheel
2. Combination switch
3. Energy absorber shaft
4. Steering joint
5. Steering bracket low
6. Set plate
7. Dust cover
8. Low shaft
9. Drag link ASS'Y
10. Key set

INSPECTION

1. Inspection of the column bush
   (1) Check a damage or clattering of the column bush and if you find any defect with it, replace the steering shaft as a aseembly.

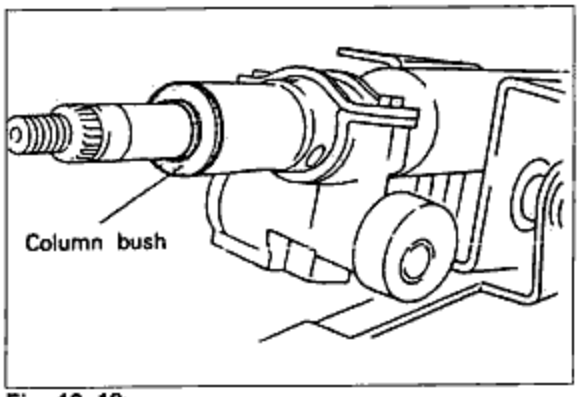

Fig. 10-12

2. Inspection of the universal joint
   (2) Check a clattering or damage or operation condition of the universal joint of steering shaft part and if you find any defect, replace it as a steering joint assembly.

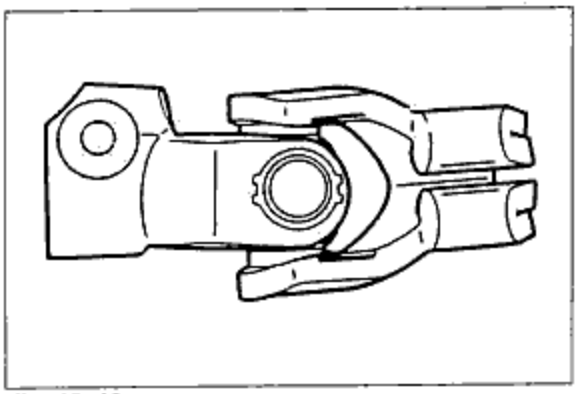

Fig. 10-13

3. Measuring of the full length of energy absorber shaft
   (1) Measure the full length of the shaft by using a tape measure and if it is not standard in length, replace it.

   Standard value: 776.2 ± 0.8mm (30.6 ± 0.03in)

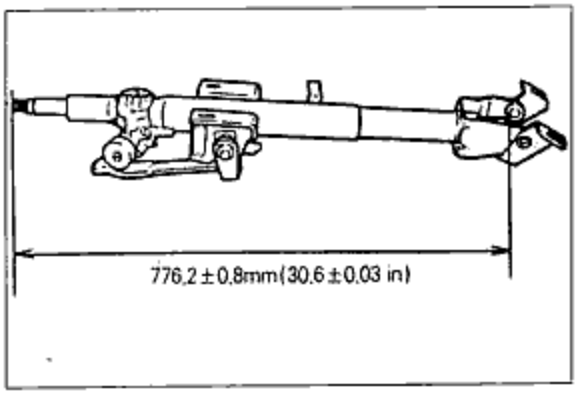

Fig. 10-14

4. Measuring of the full length of low shaft
   (1) Using a tape measure, measure the full length of shaft and if it is not standard in length, replace it.

Standard value

		"L" mm(in)
When assembling the vehicle	Manual steering	684.5(26.9)
	Power steering	662.4(26.1)

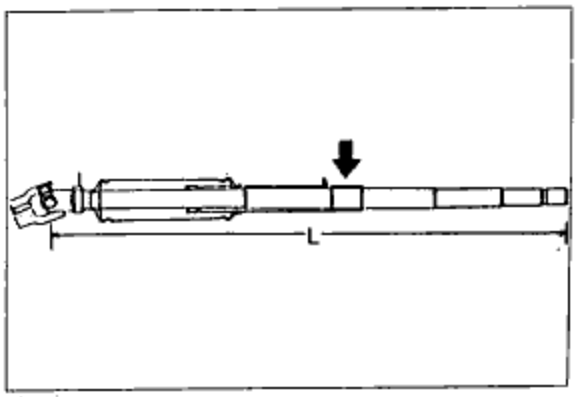

Fig. 10-15

◈ INSTALLATION

Install in the reverse order of removal and pay attention to the followings.

1. Tighten temporarily the key cylinder aligning with a shaft groove and confirm the lock operation by inserting the key into the key cylinder before performing work.
2. Install the part without a tooth out of the steering joint serration to the low shaft.

⊠ GEAR BOX

◈ ON-VEHICLE INSPECTION

1. Leak of the gear box and amount of oil
   Check if side cover oil seal, end cover, etc leak.
   Check if the oil is filled reasonably.

   Oil used: FORD TYPE M2C 33F or DEXRON II

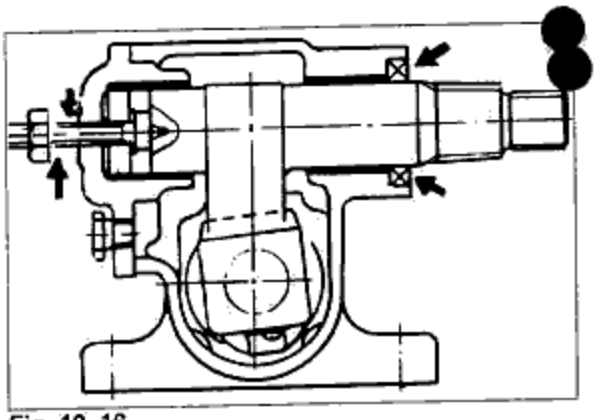

Fig. 10-16

2. Loosening of the gear box mounting part.
   Check of the mounting bolt and nut are loosened.
   If it is loosened, tighten it to the specified torque.

   Tightening torque: 8~12kg·m(57.8~86.8ft·lb)

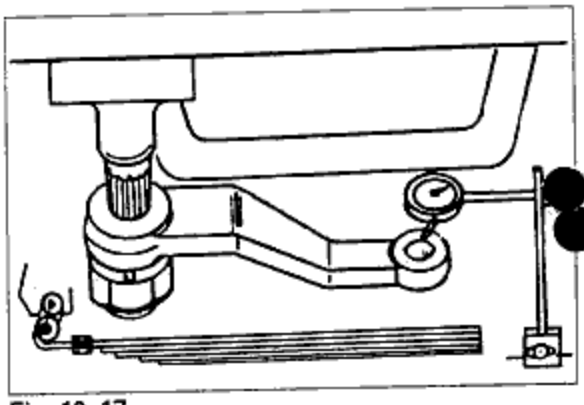

Fig. 10-17

3. Backlash of the gear

Inspection

(1) With the wheel in the straight-ahead position, remove the drag link and pitman arm.
(2) Install the dial guage and magnetic base as shown in the figure 10-18, and then measure a backlash by moving the pitman arm.

Standard backlash: 0mm(0in)
(wheel in the straight-ahead position)

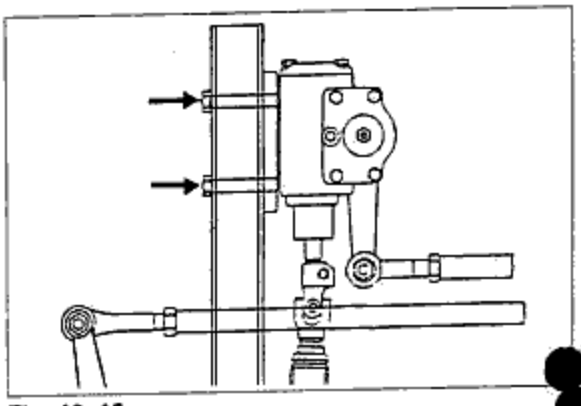

Fig. 10-18

Adjustment

If a backlash is above the standard, adjust it with adjust screw. After adjusting, check if the handle play is within the standard.

CAUTION

- **Adjusting a backlash when the wheel is in the straight-ahead position, otherwise, may a damage the gear as a backlash becomes too small.**

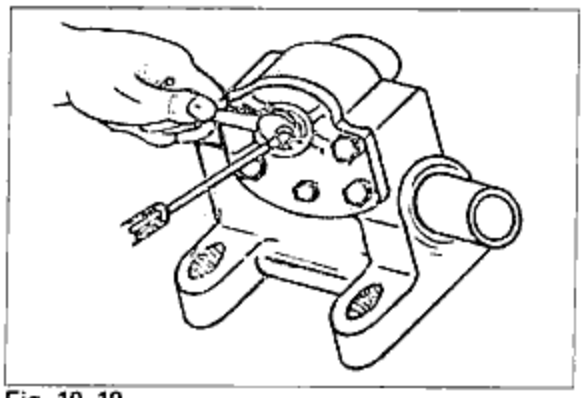

Fig. 10-19

MANUAL STEERING GEAR BOX

DISASSEMBLY

Remove a dirt, oil of the steering gear and drain a gear oil before disassembly, and then disassemble in the numbered order shown in the figure.

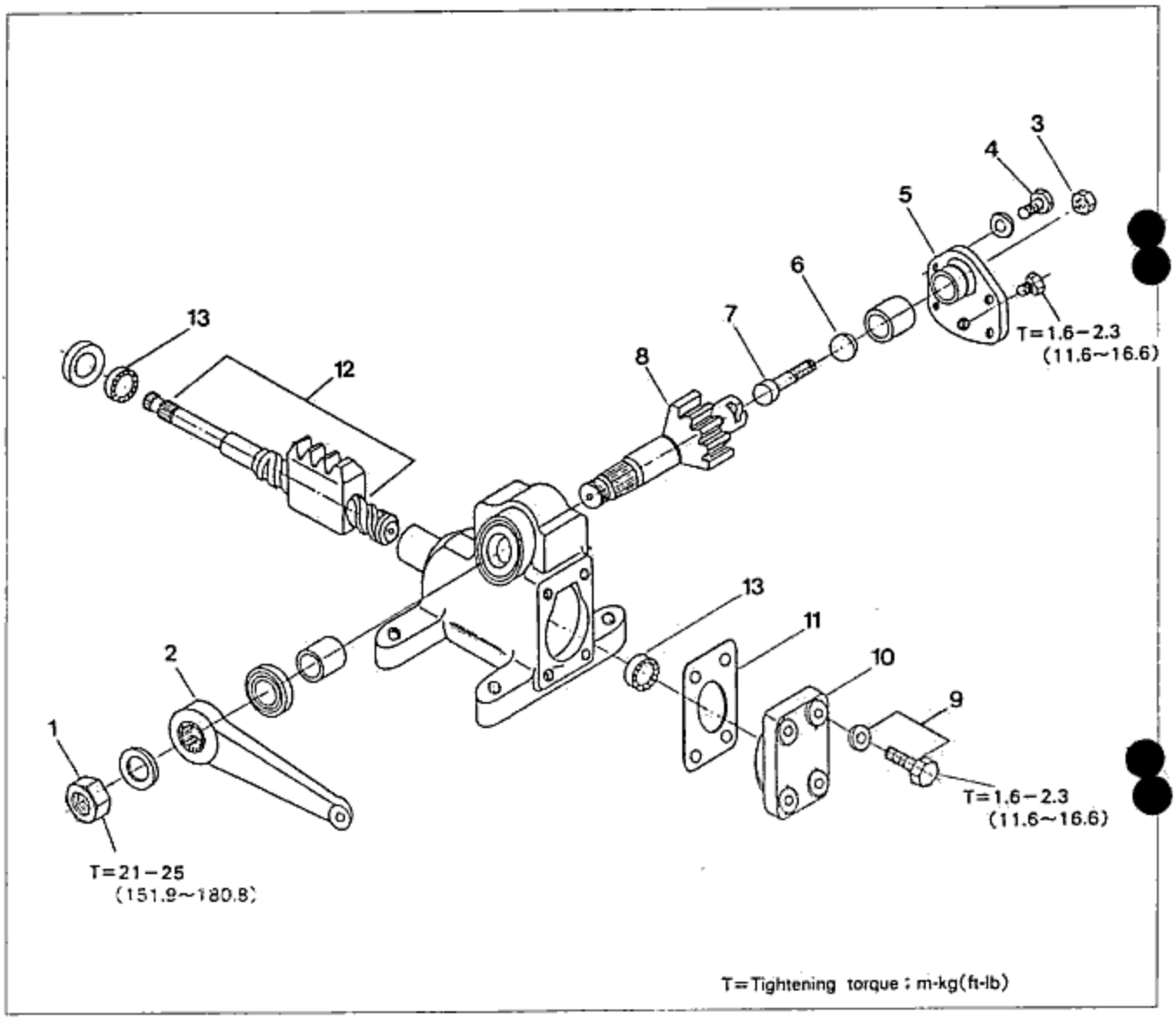

Fig. 10-20

1. Lock nut
2. Pitman arm
3. Bolt
4. Nut
5. Side cover
6. Adjust shim
7. Adjust screw
8. Sector shaft
9. Bolt
10. End cover
11. Shim
12. Worm ball nut
13. Bearing

CAUTION

- Disassemble the sector shaft in the straight-ahead positon.

◆ INSPECTION

Check the following items and if you find any defects, replace them.

1. Noise or uneasy operation of each bearing
2. Damage or deformation of the pitman arm
3. Defective rotation of worm ball-nut assembly and play of the shaft direction

CAUTION

- **Fix the shaft as shown in the figure 10-21 and check if the nut drop rotating by its self-weight.**
- **In case the rotation is not smooth, or the nut does not drop its self-weight, replace it with assembly.**

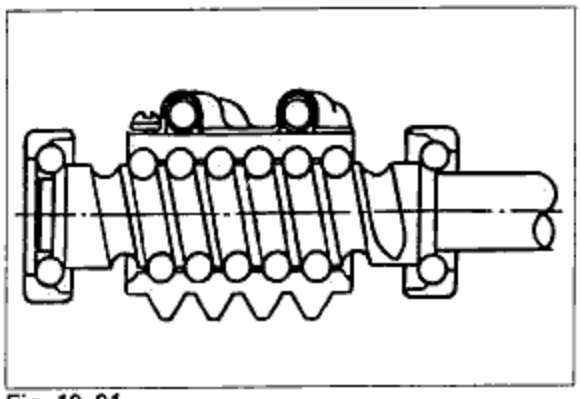

Fig. 10-21

◆ ASSEMBLY

Assemble in the reverse order of disassembly, and take note of the followings.

1. Use a new gasket.
2. Apply a gear oil to the lip of oil seal, each moving part, and gear contact before assembling.
3. Apply liquid packing(SEALANT No.22) to the adjust screw thread before assembling.

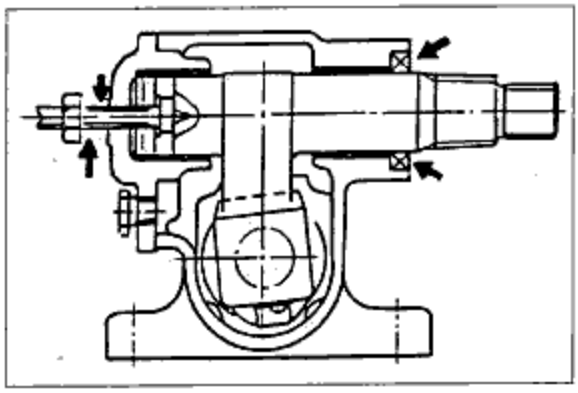

Fig. 10-22

4. Putting adjust screw and shim into the upper part of sector shaft, measure the clearance of the shaft direction.
   If the clearance is above the standard, make it to be standard by choosing and using adjust shim.

   Clearance:0~0.1mm(0~0.004in)

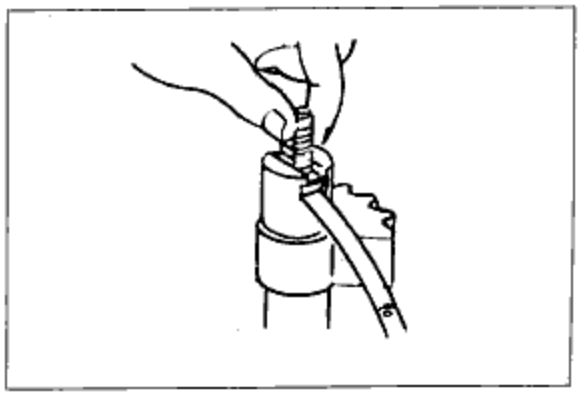

Fig. 10-23

5. Assemble the sector shaft as shown in the figure 10-24, so that the teeth of sector shaft and worm ball-nut may contact with each other in the center.

   Tightening torque for side cover: 1.6~2.3kg·m (11.6~16.6ft·lb)

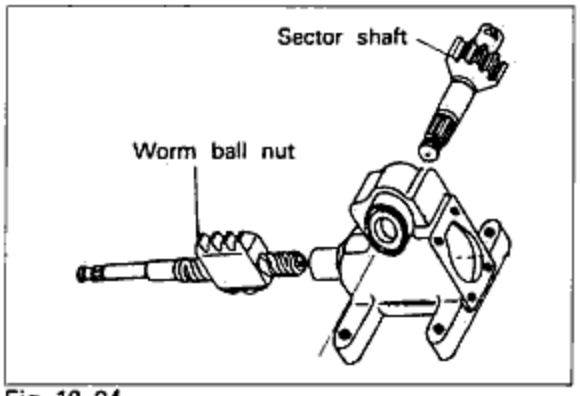

Fig. 10-24

6. Assemble the pitman arm.

   Tightening torque: 21~25kg·m(151.9~180.8ft·lb)

7. Adjust a backlash of the steering gear to be standard by turning the adjust screw.

   CAUTION

   - **Adjusting a backlash when the wheel is in the straight-ahead position, otherwise, may a damage the gear as a backlash becomes too small.**

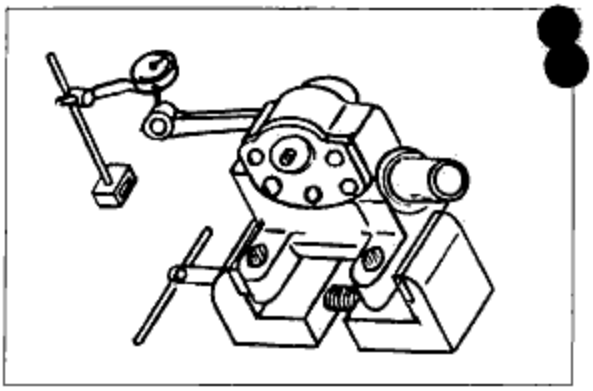
Fig. 10-25

POWER STEERING GEAR BOX

DISASSEMBLY

Remove a dirt, oil, etc of the steering gear and drain a gear oil before disassembly.
Assembly is in the numbered order shown in the figure and pay attention to the following items.

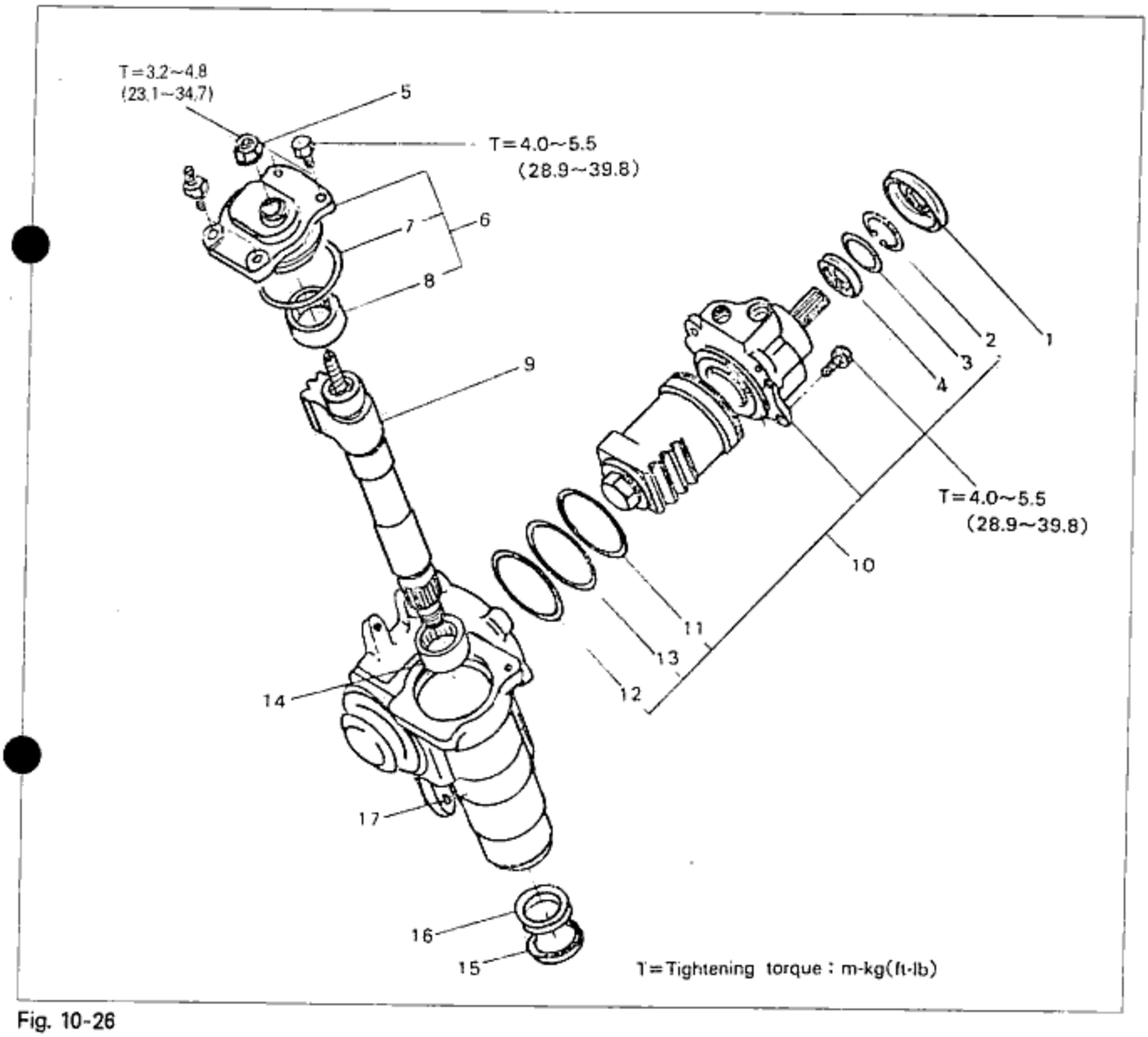

Fig. 10-26

1. Dust cover
2. Retainer ring
3. Back-up ring
4. Oil seal
5. Lock nut
6. Side cover ASS'Y
7. O-ring
8. Needle bearing
9. Sector shaft
10. Ball nut & valve housing ASS'Y
11. Needle bearing
12. Sealing
13. O-ring
14. Needle bearing
15. Dust seal
16. Sealing
17. Gear box

1. Clean the power steering before disassembling and fix it.

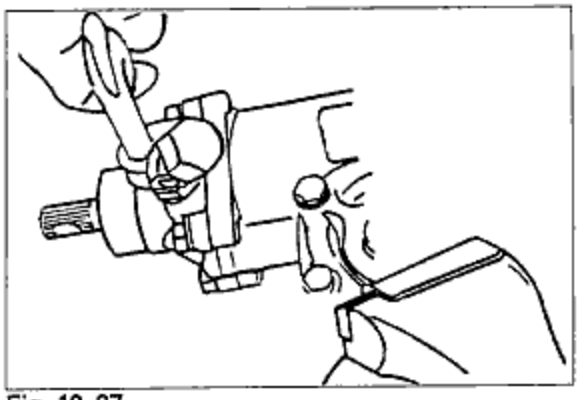

Fig. 10-27

2. Side cover assembly
   (1) Loosen the lock nut of adjust screw and then loosen the bolt of side cover.
   (2) Turning the adjust screw clockwise, remove the side cover.

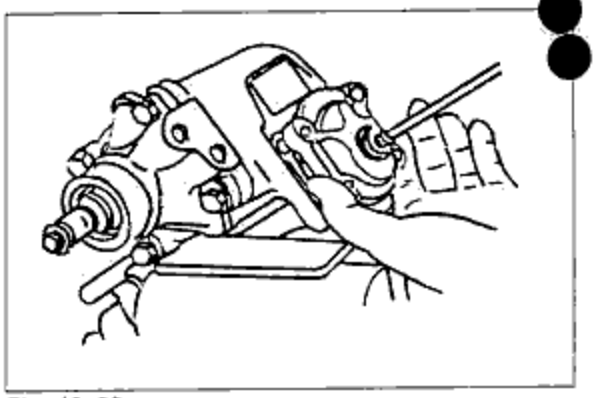

Fig. 10-28

3. Sector shaft
   Holding the end part of sector shaft, pull it out slowly.
   When pulling the sector shaft out of gear box, do not strike with hammer, etc.

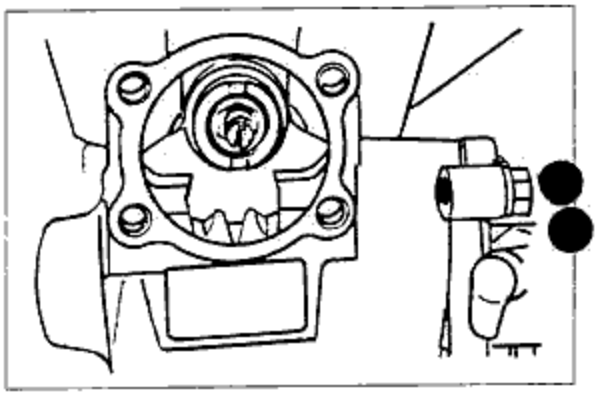

Fig. 10-29

4. Ball nut and valve housing assembly
   When removing or installing, do always keep it at a level and do not shake it.

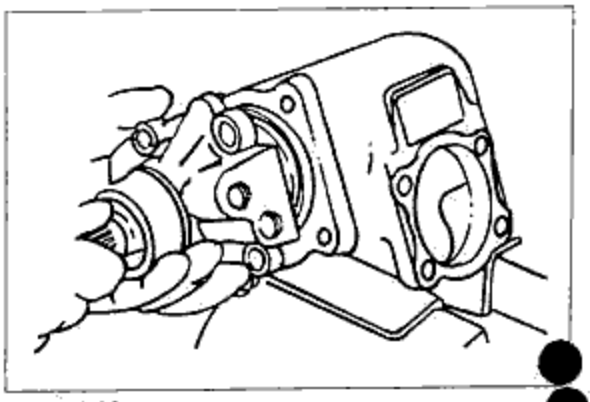

Fig. 10-30

◆ INSPECTION

Check the following items and if you find any defective parts, repair or replace them.

Rotation of ball nut

1. Check the ball nut drop smoothly by its self-weight by placing ball nut & housing assembly at a right angles.
2. In case the nut does not drop smoothly by its own weight, the worm shaft is bended or the ditch of ball is damaged.

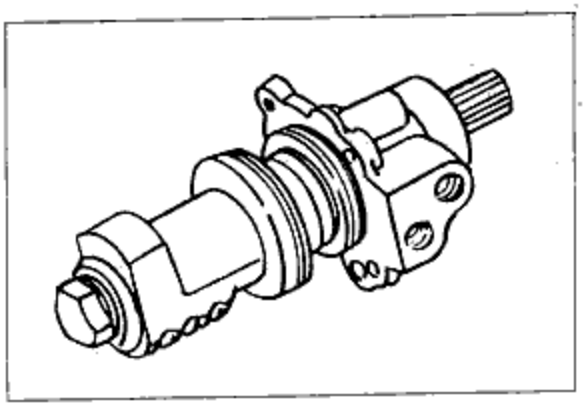

Fig. 10-31

3. When the ball nut drop, do not let it run against the worm shaft section.

Outer diameter of sector shaft

Standard	32.0mm(1.26in)
Limit	31.7mm(1.25in)

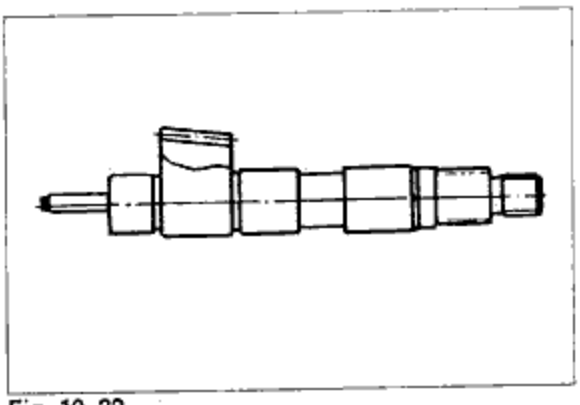

Fig. 10-32

◆ ASSEMBLY

Assemble in the reverse order of disassembly and take note of the followings.

1. Pay attention to the assembling direction when assembling a new products of seal ring, dust seal, etc.

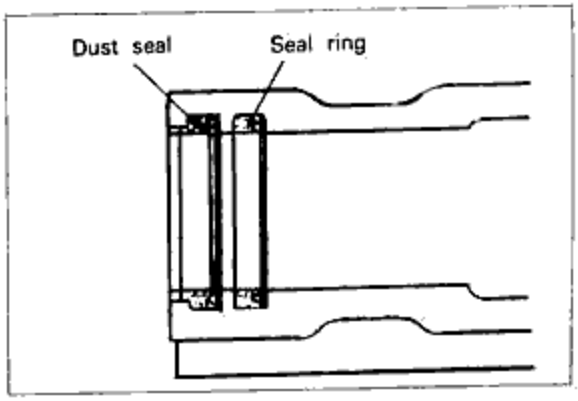

Fig. 10-33

2. When assembling the O-ring, seal ring, etc., apply grease thinly to the lips of both parts.

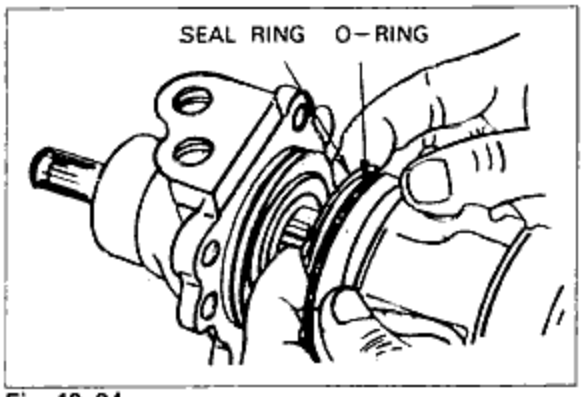

Fig. 10-34

3. Ball nut & valve housing assembly
   Keep it at a level. Let O-ring not to come outside and press it in.

   Tightening torque for bolt : 4.0~5.5kg·m (28.9~39.8ft·lb)

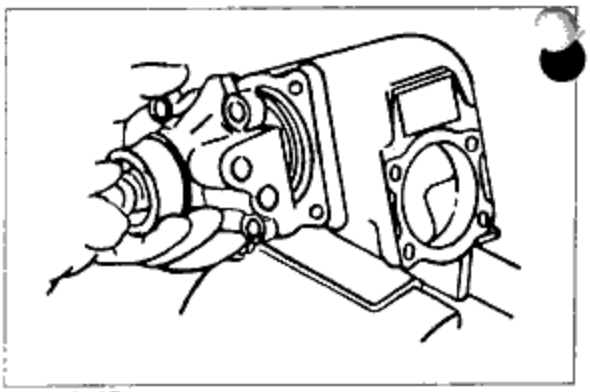
Fig. 10-35

4. Sector shaft
   Do protect the seal ring by tapping the serration of the sector shaft.
   Fit the center of ball nut into the one of sector shaft.

5. Before tightening the lock nut with the specified torque, adjust the backlash of the sector gear and ball nut as below.

   Tightening torque:3.5~4.8kg·m(25.3~34.7ft·lb)

   (1) Rotate the worm gear, which turns round the sector gear.
   (2) Adjust the sector shaft adjust screw that preload of worm shaft may be 10kg·m(72.3ft·lb) or less.
   (3) Turning round the worm shaft by one and a quarter to the right & left, measure the values of each preload.

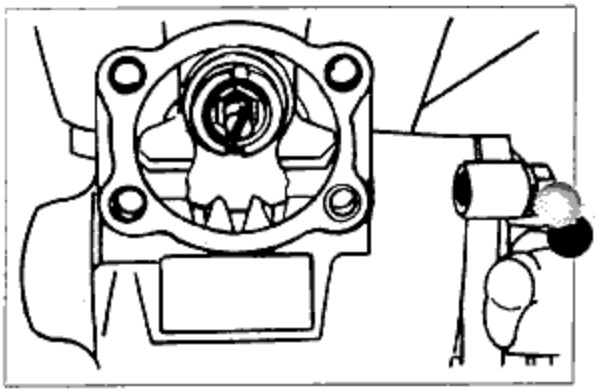
Fig. 10-36

CAUTION

- **After installing the vehicle, must bleed out the air.**

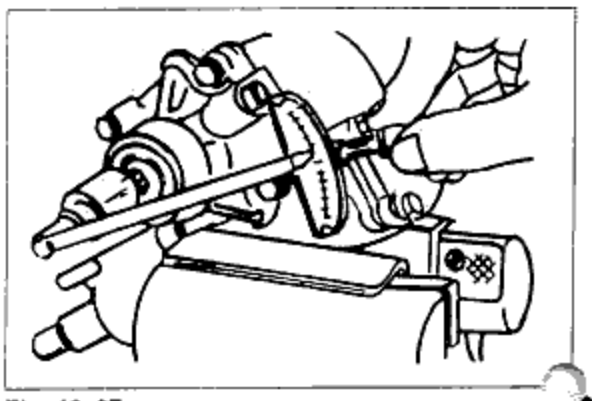
Fig. 10-37

POWER STEERING OIL PUMP

REMOVAL AND INSTALLATION

After removing the tensioner bolt, feed & return hose and oil pump mounting bolt, and then remove the oil pump.

Installation is the reverse order of removal. After installing perform the bolt adjustment of oil pump, air bleeding and checking of a fluid leak.

CAUTION

- The power steering fluid will leak out when the return hose and the feed hose are disconnected, so prepare a suitable container for it to flow into.

DISASSEMBLY AND ASSEMBLY

Disassemble in the numbered order shown in the figure. Assembly is the reverse order of disassembly.

CAUTION

- In order to prevent the entry of dirt dust, etc, disassemble and assemble in a clean, dust-free room.
- Before disassembly, plug the pipe installation hole, and then remove all oil and dirt from the outside surfaces of the oil pump.
- Before assembly, apply a coating of DEXRON II to the vanes, rotor and control valve. Also apply a coating of grease to the lip of the oil seal.

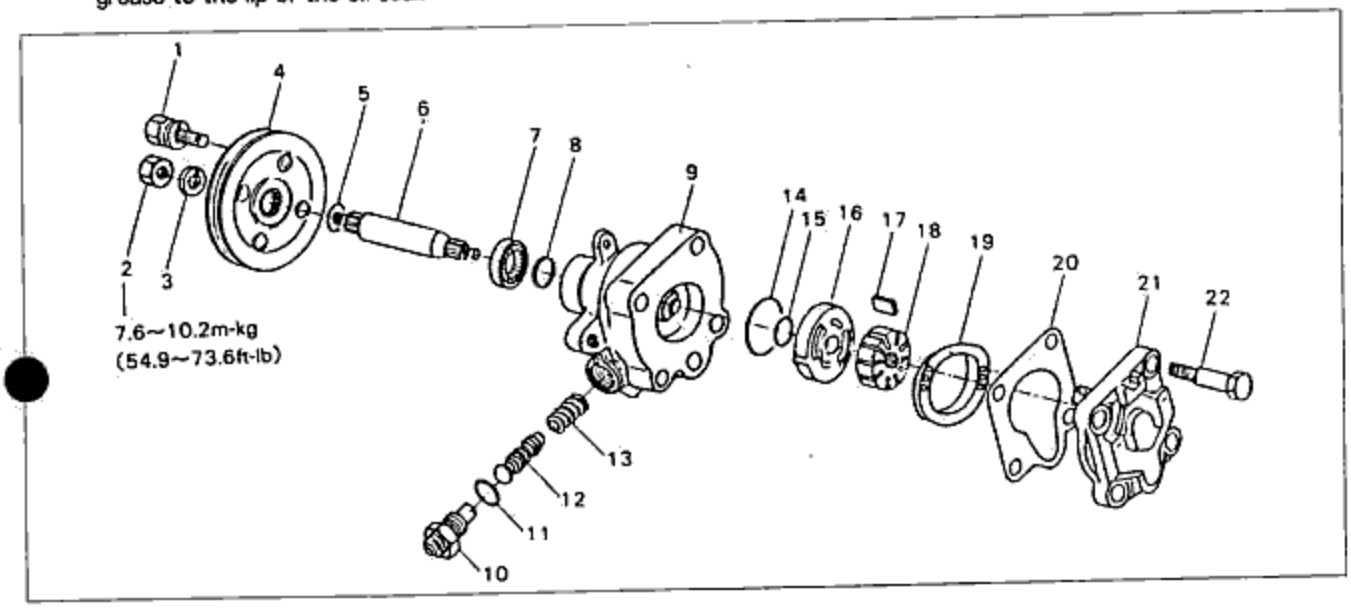

Fig. 10-38

1. Bolt, washer
2. Nut
3. Spring washer
4. Pulley ASS'Y
5. Retainer
6. Shaft
7. Ball bearing
8. Oil seal
9. Front body
10. Connector
11. O-ring
12. Valve ASS'Y
13. Spring
14. O-ring
15. O-ring
16. Pressure plate
17. Vane
18. Rotor
19. Cam
20. Gasket
21. Rear body
22. Bolt

INSPECTION

Check if the oil pump bolt is loosened or damaged, and take steps to adjust.

ASIA

BRAKE

11

- OUTLINE ····· 11—2
- SPECIFICATIONS ····· 11—2
- TROUBLESHOOTING GUIDE ····· 11—2
- ON-VEHICLE MAINTENANCE ····· 11—4
  - SIMPLE INSPECTION OF DISC PADS ····· 11—4
- INSPECTION AND ADJUSTMENT ··· 11—4
  - PEDAL HEIGHT ····· 11—4
  - PEDAL PLAY ····· 11—5
  - PEDAL-TO-FLOOR CLEARANCE ····· 11—5
  - PARKING BRAKE LEVER STROKE ····· 11—5
- BRAKE PEDAL ····· 11—6
  - REMOVAL ····· 11—6
  - INSTALLATION ····· 11—7
  - INSPECTION ····· 11—7
- MASTER CYLINDER ····· 11—8
  - REMOVAL ····· 11—8
  - INSTALLATION ····· 11—8
  - DISASSEMBLY AND ASSEMBLY ····· 11—9
  - INSPECTION ····· 11—10
  - BRAKE FLUID LEVEL SENSOR ····· 11—11
- POWER BRAKE UNIT ····· 11—11
  - ON-VEHICLE MAINTENANCE ····· 11—12
  - REMOVAL ····· 11—14
  - INSTALLATION ····· 11—14
  - DISASSEMBLY ····· 11—15
  - INSPECTION ····· 11—16
  - ASSEMBLY ····· 11—16
- VACUUM PUMP ····· 11—19
  - DISASSEMBLY ····· 11—19
  - INSPECTION ····· 11—19
  - ASSEMBLY AND INSTALLATION ····· 11—20
- FRONT DISC BRAKE ····· 11—20
  - REMOVAL ····· 11—20
  - DISASSEMBLY ····· 11—21
  - ASSEMBLY ····· 11—21
  - INSPECTION ····· 11—21
  - INSTALLATION ····· 11—22
- REAR DRUM BRAKE ····· 11—23
  - REMOVAL ····· 11—23
  - INSPECTION ····· 11—24
  - INSTALLATION ····· 11—24
- WHEEL CYLINDER ····· 11—25
  - REMOVAL ····· 11—25
  - DISASSEMBLY ····· 11—25
  - INSPECTION ····· 11—25
  - ASSEMBLY ····· 11—26
  - INSTALLATION ····· 11—26
  - ADJUSTMENT ····· 11—26
- BACK PLATE ····· 11—26
  - REMOVAL ····· 11—26
  - INSPECTION ····· 11—27
  - INSTALLATION ····· 11—27
- BRAKE LINES ····· 11—27
  - ON-VEHICLE INSPECTION ····· 11—27
  - REMOVAL AND INSTALLATION ····· 11—27
  - AIR BLEEDING ····· 11—28

⊠ OUTLINE

1. The front brakes are disc brakes.
2. The mounting support is directly attached to the knuckle at two points, with a construction so that braking torque is not applied to the caliper body. The disc brakes are the ventilated, separated type.
3. The shoe clearance of the rear brake can be adjusted by a adjuster and the parking brake is the lever type.

⊠ SPECIFICATIONS

Items			Specification	Remarks
Brake pedal	Type		Suspended type	
	Pedal lever ratio		5.02	
	Maximum stroke	mm(in)	162(6.38)	
Master cylinder	Type		Tandem type(with level sensor)	
	Cylinder inner diameter	mm(in)	22.2(0.875)	
	Reserve tank capacity	(cc)	182	
Front disc brakes	Type		Disc(Ventilated)	
	Cylinder inner diameter	mm(in)	57.15(2.25)	
	Pad dimensions	mm(in)	49×111×10	
	(width×length×thickness)		(1.93×4.37×0.39)	
	Disc plate dimensions	mm(in)	275×20	
	(effective diameter×thickness)		(10.83×0.79)(ventilated)	
	Shoe clearance adjustment		Automatic adjuster	
Rear drum brakes	Type		Drum type	Australia:
	Wheel cylinder inner diameter	mm(in)	19.05(0.75)	22.22
	Lining dimensions	mm(in)	249.6×45×4	
	(width×length×thickness)		(98.3×17.7×1.57)	
	Drum inner diameter	mm(in)	260(10.24)	
	Shoe clearance adjustment		Manual type adjuster	
Power brake unit	Type		Vacuum multiplier	
	Size	mm(in)	177.8(7)	
Brake fluid			FMVSS 116, DOT-3, or DOT-4	
Parking brake	Type		Mechanical type, 2 rear brakes	
	Operation system		Floor lever	

⊠ TROUBLESHOOTING GUIDE

Problem	Possible cause	Correction
Poor braking	· Leakage of brake fluid	· Repair
	· Air in lines	· Air bleeding
	· Worn pad or lining	· Replacement
	· Brake fluid, grease, oil or water on pad or lining	· Determine the cause and clean or replace
	· Hardening of pad or lining surface, or poor contact	· Grinding or replacement
	· Malfunction of piston of disc brake	· Disassemble the caliper and replace the cylinder

Problem	Possible cause	Correction
Poor braking	· Malfunction of master cylinder or wheel cylinder	· Repair or replacement
	· Malfunction of power brake unit	· Repair or replacement
	· Malfunction of check valve(vacuum hose)	· Repair or replacement
	· Damaged vacuum hose	· Replacement
	· Deterioration of flexible hose	· Replacement
	· Wear of tire	· Replacement
Brakes pull to one side	· Worn pad or lining	· Replacement
	· Brake fluid, grease, oil or water on pad or lining	· Determine the cause, and clean or replace
	· Hardening of pad or lining surface, or poor contact	· Grinding or replacement
	· Abnormal wear, distortion or eccentricity of pad or lining	· Repair or replacement
	· Malfunction of automatic adjuster	· Repair or replacement
	· Looseness or deformation of back plate mounting bolt	· Tightening or replacement
	· Malfunction of wheel cylinder	· Repair or replacement
	· Malfunction of shoe	· Adjustment
	· Improper adjustment of wheel bearing preload, or wear	· Adjustment or replacement
	· Improper adjustment of wheel alignment	· Adjustment
	· Unequal air pressures	· Adjustment
	· Malfunction of master cylinder	· Repair or replacement
	· Damaged or distortion of brake drum	· Repair or replacement
Brakes don't release	· Shoe doesn't return properly	· Adjustment
	· Wheel cylinder doesn't return properly	· Cleaning or replacement
	· Improper return of parking brake cable, or improper adjustment	· Repair or adjustment
	· Improper adjustment of wheel bearing preload	· Adjustment
	· Malfunction of check valve	· Repair or replacement
Pedal goes too far (Too much pedal stoke)	· Air in system due to insufficient brake fluid	· Add fluid and bleed air
	· Improper adjustment of pedal play	· Adjustment
	· Worn lining	· Replacement
	· Air in lines	· Air bleeding
Abnormal noise or vibration during braking	· Worn lining	· Replacement
	· Deterioration of lining surface	· Grinding or replacement
	· Brakes don't release	· Repair
	· Foreign material or scratches of brake drum contact surface	· Cleaning
	· Looseness of back plate mounting bolt	· Tightening
	· Damage or deviation of drum contact surface	· Replacement
	· Poor contact of lining	· Repair or replacement
	· Insufficient grease on sliding parts	· Apply grease
	· Improper adjustment of wheel bearing preload	· Adjustment
Parking brake doesn't hold well	· Excessive lever stroke	· Adjustment
	· Brake cable stuck or damaged	· Repair or replacement
	· Brake fluid or oil on lining	· Cleaning or replacement
	· Hardening of lining surface, or poor contact	· Grinding or replacement

ON-VEHICLE MAINTENANCE

SIMPLE INSPECTION OF DISC PADS

Inspect as follows

1. Jack up the front end of the vehicle, and support it at the specified place by using a safety stand.
2. Remove the wheel.
3. Check, through the caliper inspection hole, whether there is still a groove in the lining of the pad.
4. If no groove remains, replace the pad.

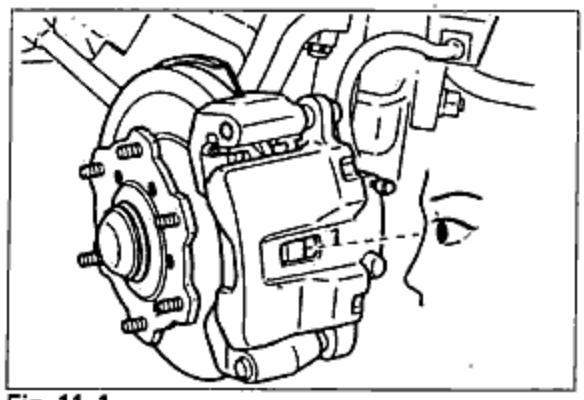

Fig. 11-1

INSPECTION AND ADJUSTMENT

PEDAL HEIGHT

Inspection

Check whether the distance from the center of the upper surface of the pedal pad to the dashboard panel is the standard value.

Pedal height:211mm(8.31in)
(Reference:distance to the pedal bracket)

Adjustment

Adjust as described below:

1. Disconnect the coupler or the stop switch.
2. Loosen the lock nut Ⓑ of the stop switch Ⓐ, turning it to the position where the switch does not contact the pedal.
3. Loosen the lock nut Ⓓ of the operating rod Ⓒ, and turn the rod to adjust the height.
4. Tighten until the stop switch contacts the pedal, and then tighten an additional 1/2turn.
   Then tighten the lock nut.

   Lock nut Ⓑ tightening torque:
   1.4~1.8kg·m(10.18~13.02ft·lb)

5. After adjusting the pedal play, secure the operating rod by the lock nut Ⓓ.

   Lock nut Ⓓ tightening torque:
   2.0~3.0kg·m(14.44~21.66ft·lb)

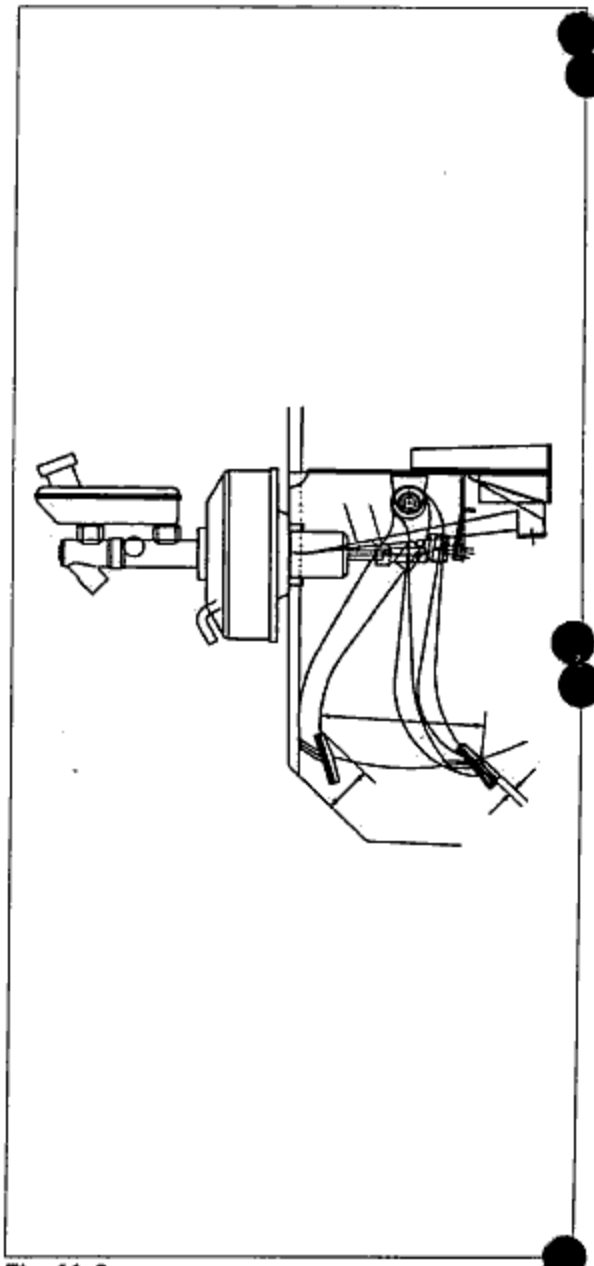

Fig. 11-2

◆ PEDAL PLAY

Inspection

After depressing the pedal a few times in order to eliminate the negative pressure in the vacuum line, gently depress the pedal by hand to check whether the play is the standard value.
(Until the valve plunger contacts the stopper plate= until the power piston begins to move.)

Pedal play:7~9mm(0.28~0.35in)

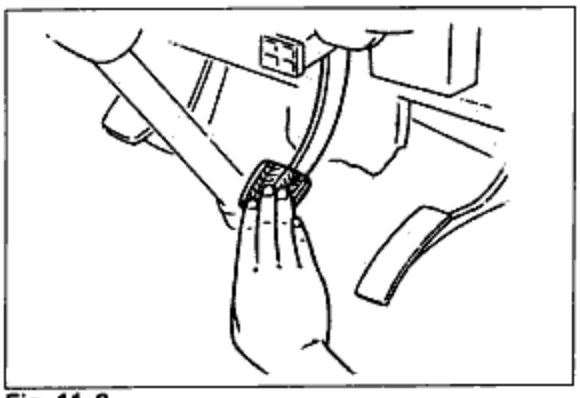

Fig. 11-3

Adjustment

Loosen the lock nut Ⓓ of the operating rod Ⓒ and then turn the rod to adjust the play.

Lock nut tightening torque:
2.0~3.0kg·m(14.44~21.66ft·lb)

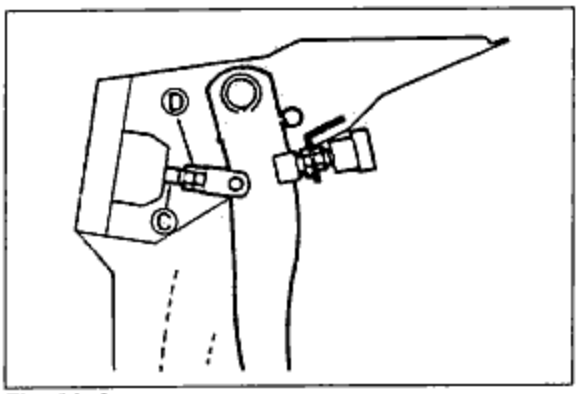

Fig. 11-4

◆ PEDAL-TO-FLOOR CLEARANCE

Inspection

Check whether the distance from the floor panel to the center of the upper surface of the pedal pad is the standard value when the pedal is depressed with a force of 60kg(132.3lb).

Pedal-to-floor clearance:74mm(2.91in) or more

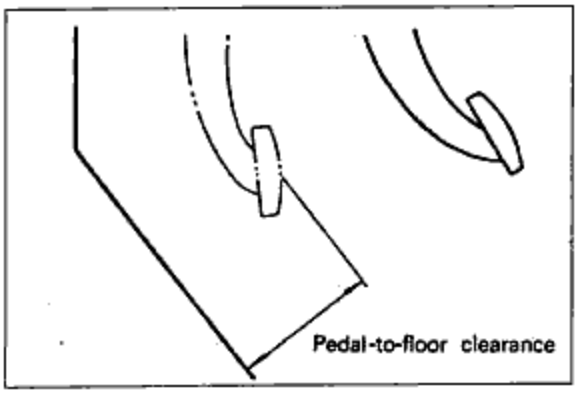

Fig. 11-5

If the distance is the standard value or less, check as described below.
1. Check for air in the brake system.
2. Check for excessive shoe clearance.

◆ PARKING BRAKE LEVER STROKE

Inspection

Check whether the stroke is within the standard value range when the parking brake lever is pulled by a force of 25kg(55.1 lb)

Stroke:8~12notches at a force of 25kg(55.1 lb)

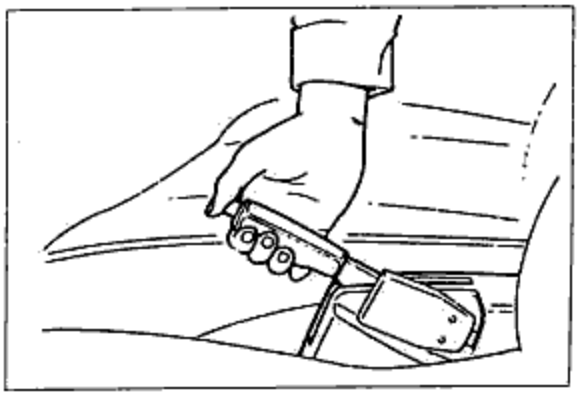

Fig. 11-6

Adjustment

As shown in the figure, the adjustment is made, after jacking up the vehicle, at the connection of the rear cable and the front cable.

CAUTION

- Make the adjustment after first starting the engine and then depressing the brake pedal a few times while the vehicle is moving in reverse.
- Check to be sure that the brakes are not dragging.
- After making the adjustment, check to be sure that the parking brake warning lamp illuminates when the brake lever is pulled on notch.

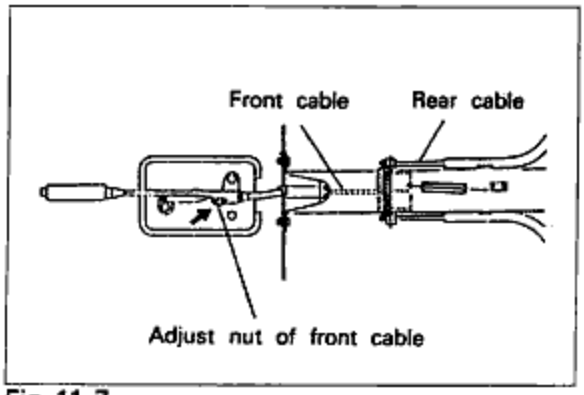

Fig. 11-7

BRAKE PEDAL

REMOVAL

Remove in the numbered order shown in the figure.

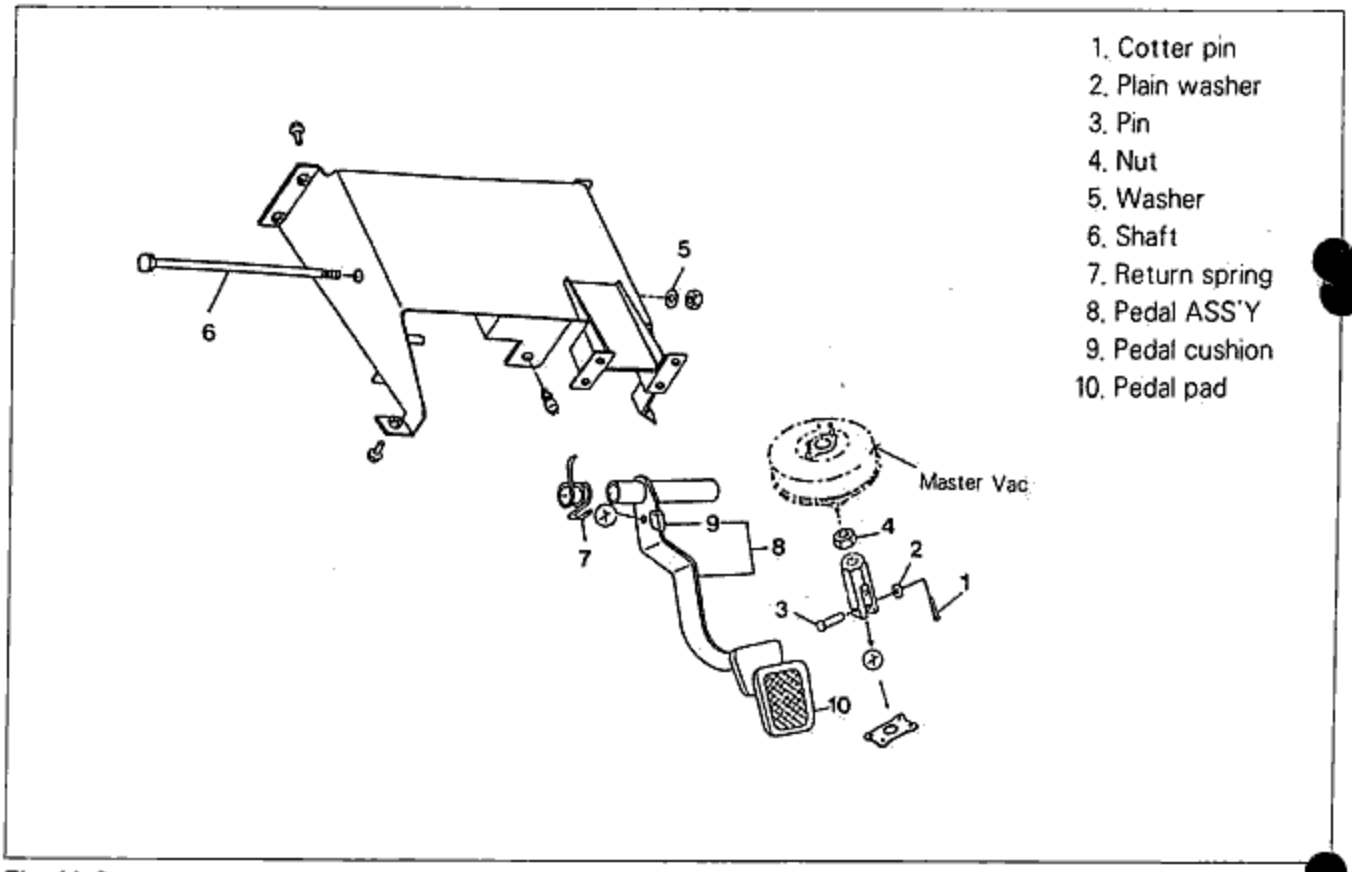

Fig. 11-8

INSTALLATION

Installation is the reverse order of removal. Pay attention to the following points.

CAUTION

- Apply a coating of grease to the inner surface of the bushing, and to the contact surfaces of the pin and spring.
- After installation, check, and adjust if necessary, the pedal height and play.

INSPECTION

Check the following points. Replace parts if necessary.

1. Check the bushing for wear.
2. Check the pedal for bending.
3. Check the pedal pad for wear or damage.
4. Check the bolt for bending.
5. Check the return spring for weakness or damage.

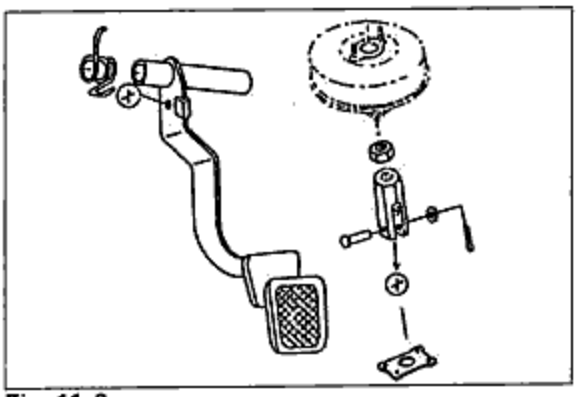

Fig. 11-9

MASTER CYLINDER

REMOVAL

1. Remove the brake fluid through the breather valve.
2. Remove the front and rear pipe from the master cylinder, and then remove in the numbered order shown in the figure.

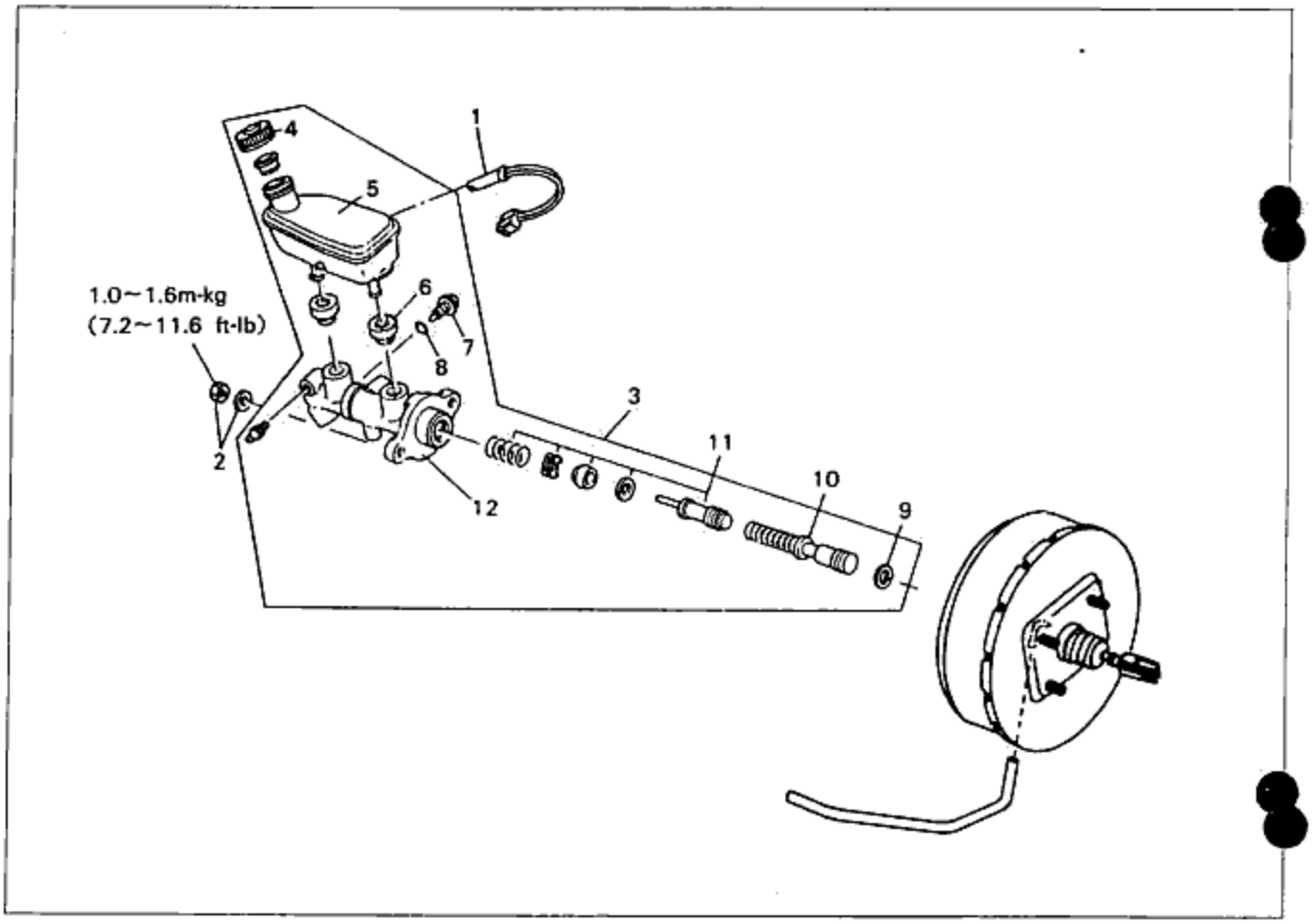

Fig. 11-10

1. Brake fluid level sensor
2. Nut and washer
3. Master cylinder ASS'Y
4. Reserve tank cap
5. Reserve tank
6. Bush
7. Stopper screw
8. O-ring
9. Stop ring
10. Primary piston ASS'Y
11. Secondary piston ASS'Y
12. Master cylinder body

INSTALLATION

Installation is the reverse order of removal. Pay attention to the following points.

CAUTION

- **After installation, add brake fluid and bleed the air.**
  Check each part for fluid leakage.

Master cylinder

Check, and adjust if necessary, the clearance between the push rod of the power brake unit and the piston of the master cylinder.

1. As shown in the figure, place the adjustment gauge (49 B002 765) on top of the master cylinder, and then turn the adjustment bolt until its end contacts the bottom of the piston push rod insertion hole.

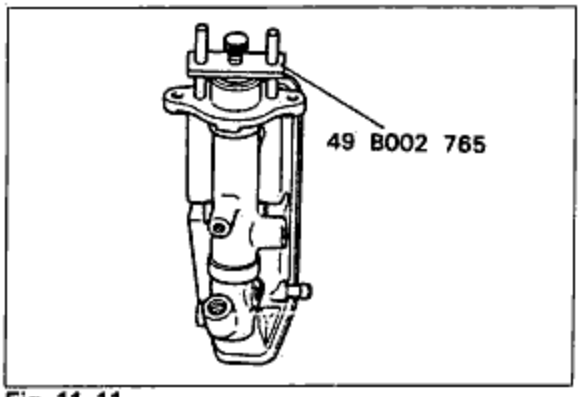

Fig. 11-11

2. Invert the adjustment gauge used in step 1, and place it on the top of the power brake unit.
3. Check whether the clearance between the edge of the gauge and the push rod of the power brake unit is 0mm.
   If it is not 0mm, loosen the lock nut of the push rod, and turn the push rod to make the adjustment.

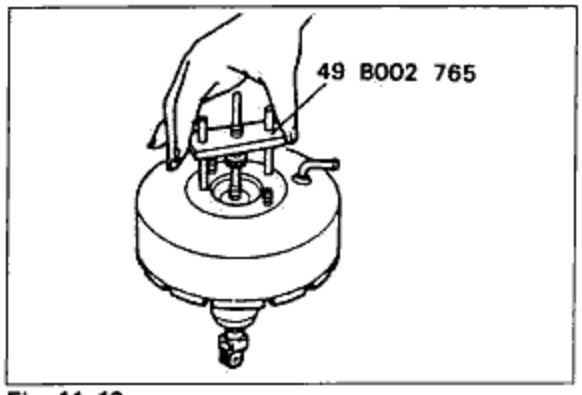

Fig. 11-12

4. By making the above adjustment, the clearance between the push rod and piston(after installation of the brake master cylinder and the power brake unit) will be as shown in the table below.

	Push rod-to-piston clearance
When negative pressure applied to the unit is approx. 500mm·Hg(19.7in·Hg)	0.1~0.3mm (0.004~0.0035in)

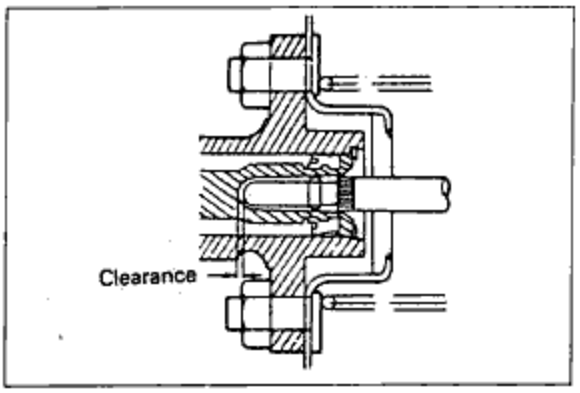

Fig. 11-13

◆ DISASSEMBLY AND ASSEMBLY

After removing the brake fluid, disassemble in the order of steps 4 to 12 in the figure. Assembly is in the reverse order of disassembly.

CAUTION

- **Use a new piston cup and O-ring. Note that the primary side is replaced as the piston assembly.**
- **Be careful not to let foreign material in, and not to scratch the inside of the cylinder or the piston.**

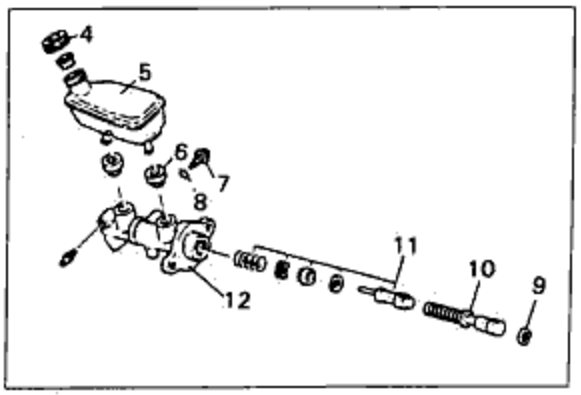

Fig. 11-14

Stop ring

Push the piston by hand, and remove the stop ring by using snap ring pliers.

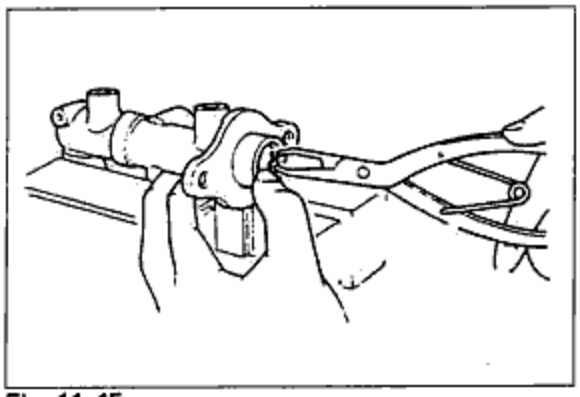

Fig. 11-15

Stopper screw

When installing the stopper screw, use a crosstipped screwdriver to push the primary piston assembly all the way inward, and then tighten after confirming that the collar of the piston has passed through the stopper bolt hole.

CAUTION

- **After tightening, push and pull back the crosstipped screwdriver to check to be sure that the tightened position of the stopper screw is correct.**

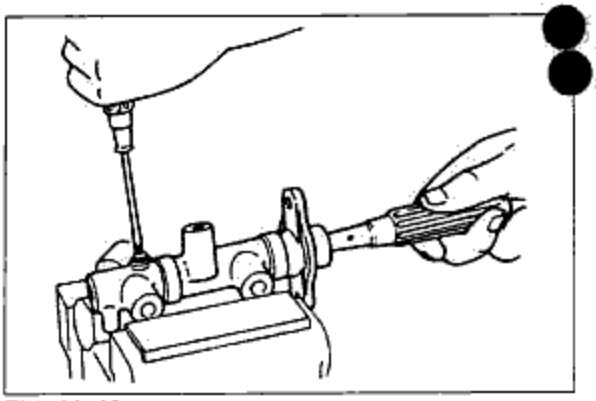

Fig. 11-16

Apply a liberal coating of brake fluid to the inside of the piston cylinder and the piston cup, and then install them.

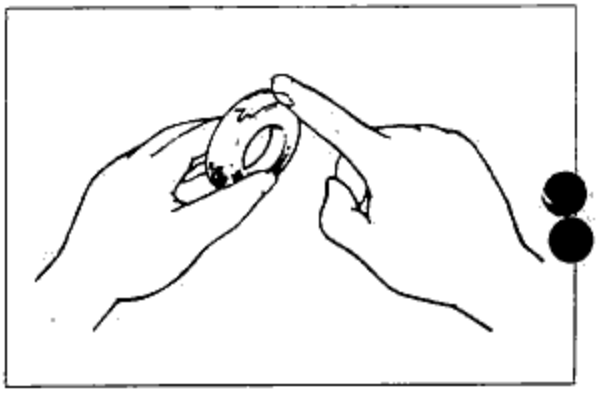

Fig. 11-17

◆ INSPECTION

Check the following points. Replace parts if necessary.

1. Check the piston and the bore of the cylinder body for abnormal wear, rust or damage.

NOTE

- **If the body must be replaced, replace the cylinder assembly; if the piston must be replaced, replace the piston assembly.**

2. Check each spring for weakness or damage.

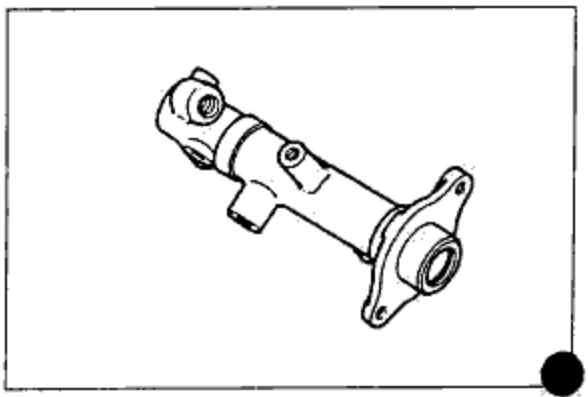

Fig. 11-18

NOTE

- If the primary side must be replaced, replace the primary piston assembly.

3. Check the reserve tank for damage, or deformation.

NOTE

- If replacement is necessary, replace the reserve tank set.

4. Piston-to-cylinder bore clearance:

Standard: 0.04~0.125mm (0.002~0.005in)
Limit: 0.15mm (0.006in)

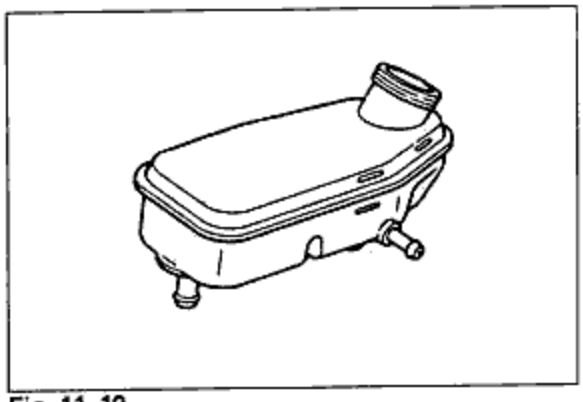

Fig. 11-19

BRAKE FLUID LEVEL SENSOR

Inspection

1. Remove the coupler of the sensor.
2. Connect a circuit tester to the coupler, and move the float up and down, as shown in the figure, to check for continuity. There should be continuity when the float is below the "MIN" mark, and no continuity when it is above the mark. If otherwise, replace the sensor.

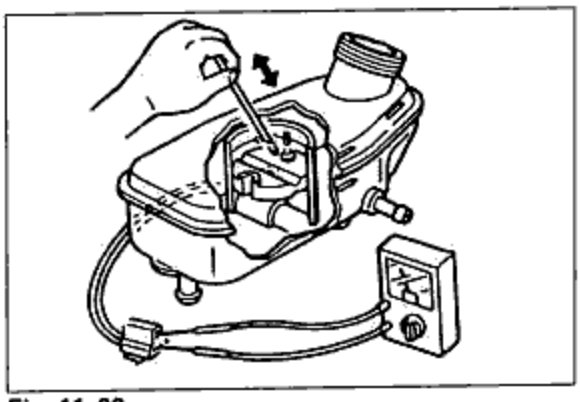

Fig. 11-20

POWER BRAKE UNIT

If the unit find any defect, replace it with assembly.

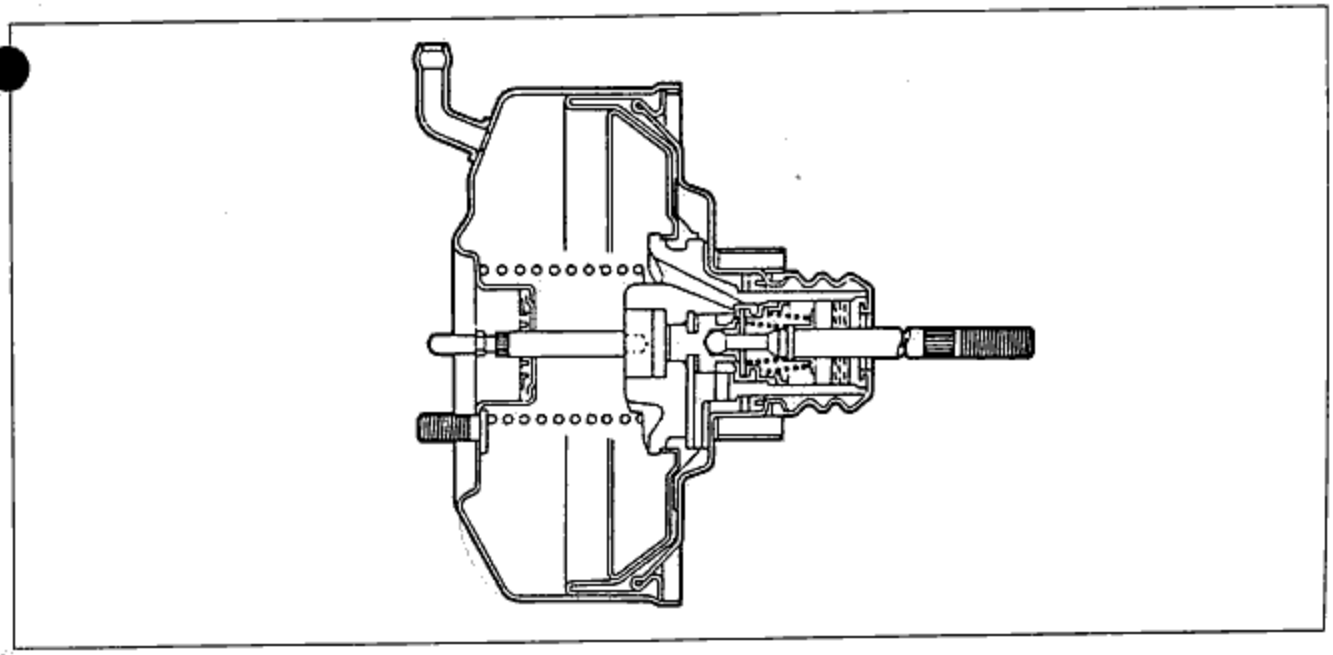

Fig. 11-21

◈ ON-VEHICLE MAINTENANCE

NOTE

- The following methods are simple tests by which the function of the power brake unit can usually be judged.

Method without using a tester

If the nature of the problem is still not clear after following the 3 steps below, make the more detailed check described in "Method using a tester."

[1]

① With the engine stopped, depress the pedal a few times.
② With the pedal depressed, start the engine.
③ If, immediately after the engine starts, the pedal moves down slightly, the unit is good.

[2]

① Start the engine.
② Stop the engine after it has run for 1 or 2 minutes.
③ Depress the pedal with the usual force.
④ If the first pedal stroke is long and becomes shorter with subsequent strokes, the unit is good.

CAUTION

- If there is a problem, check for damage of the check valve or vacuum hose, and check the installation condition. Repair it if necessary, and check once again.

[3]

① Start the engine.
② Depress the pedal with the usual force.
③ Stop the engine with the pedal still depressed.
④ Hold the pedal down for about 30 seconds.
⑤ If the pedal height does not change, the unit is good.

Method using a tester

Connect a pressure gauge, vacuum gauge and pedal-depression force gauge metal as shown in the figure. After bleeding the air from the pressure gauge, conduct the test as described in the 2 steps below.

NOTE

- Use commercially available guages and pedal-depression force gauge.

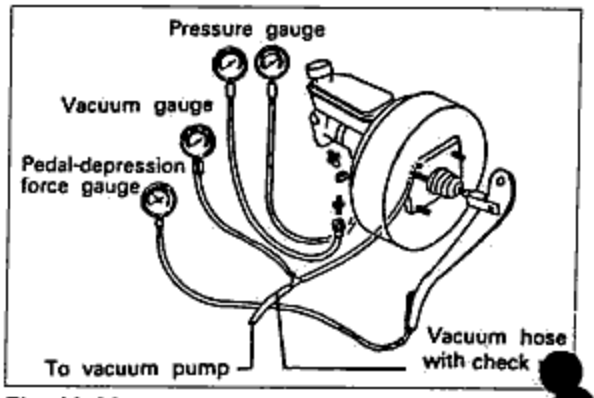

Fig. 11-22

Checking for vacuum loss at non-loaded condition

① Start the engine
② Stop the engine when the vacuum gauge reading reaches 500mm·Hg(19.7 in·Hg)
③ After stopping the engine, measure the decrease of the vacuum for 15 seconds.
④ If the decrease is 25mm·Hg(1.0 in·Hg), the unit is good.

Checking for vacuum loss at loaded condition

① Start the engine.
② Depress the brake pedal with a force of 20kg(44.1 lb)
③ With the brake pedal depressed, stop the engine when the vacuum gauge reading reaches 500mm·Hg (19.7 in·Hg)
④ After stopping the engine, measure the decrease of the vacuum for 15 seconds.
⑤ If the decrease is 25mm·Hg(1.0 in·Hg), the unit is good.

Checking the on-booster functions

① If with the engine stopped(when the vacuum is 0), the relationship between the pedal force and fluid pressure is within the standard value range, the unit is good.

Pedal force	Fluid pressure
20kg(44 lb)	11kg/cm² or more ····· 9 inch (156.4 lb/in²)

② Start the engine. Depress the brake pedal when the vacuum reaches 500mm·Hg(19.7 in·Hg). If the relationship between the pedal force and fluid pressure is within the standard value range, the unit is good.

Pedal force	Fluid pressure
20kg(44 lb)	65kg/cm² or more ····· 9 inch (924.4 lb/in²)

Check valve function

CAUTION

- **The check valve is pressed into the vacuum hose, and there is an arrow on the hose surface to indicate the installation direction.**

1. Disconnect the vacuum hose(with check valve).
2. Check to be sure that air passes to the engine and not from the engine when air is taken in from the powerbrake unit side of the vacuum hose.

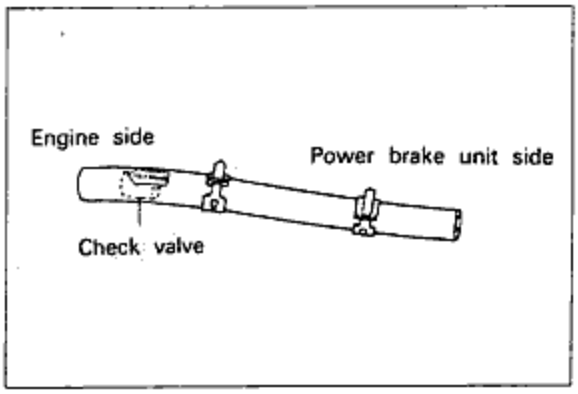

Fig. 11-23

CAUTION

- **If the check valve is bad, replace it together with the hose.**

◈ REMOVAL

Remove in the numbered order shown in the figure.

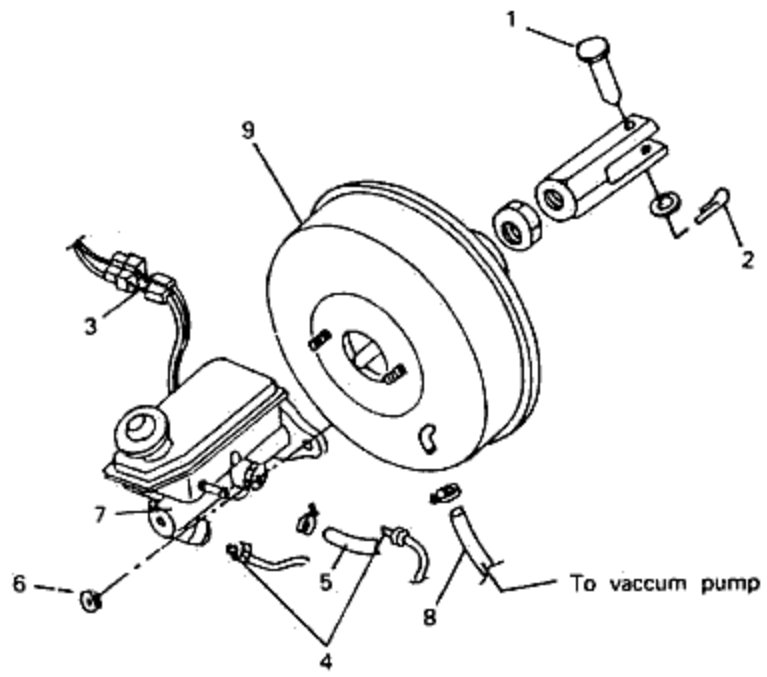

1. Cotter pin(use new one)
2. U-pin(use new one)
3. Level sensor coupler
4. Brake pipe
5. Hose
6. Nut
7. Master cylinder ASS'Y
8. Vacuum hose
9. Power brake unit ASS'Y

Fig. 11-24

◈ INSTALLATION

Installation is in the reverse order of removal. Take the following steps after installation.

1. Check and adjust the push rod and piston clearance.
2. Add fluid and bleed the air.
3. Check all parts for fluid leakage.
4. Make an on-vehicle check of the unit.
5. Check to be sure that the vacuum hose does not contact other parts.

CAUTION

- Apply grease to the clevis pin.

◈ DISASSEMBLY

Disassemble the power brake unit in the numbered order shown in the figure.

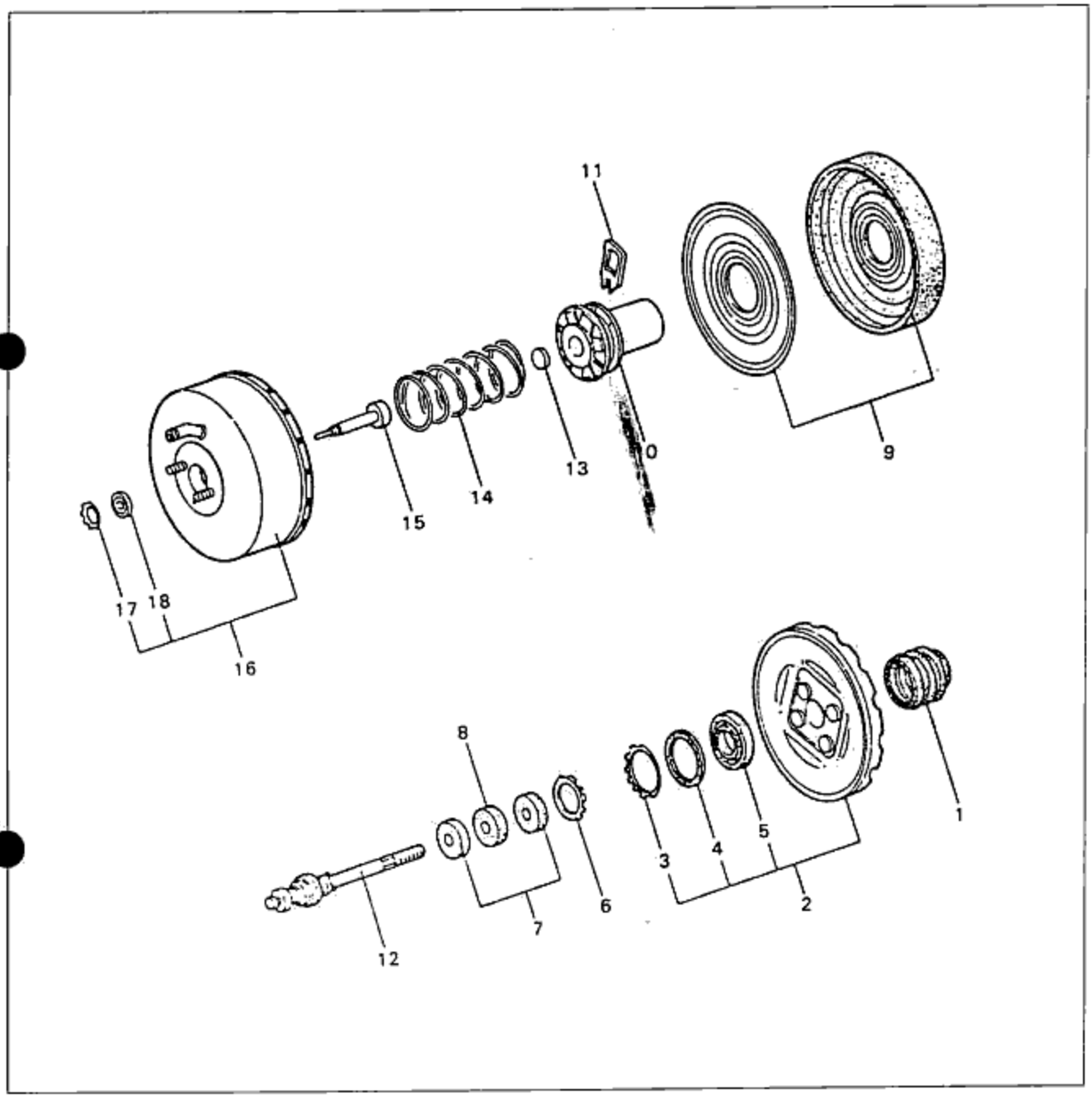

Fig. 11-25

1. Dust boot
2. Rear shell ASS'Y
3. Retainer
4. Bearing
5. Dust seal
6. Retainer
7. Air filter
8. Air silencer
9. Diaphragm and plate
10. Power piston ASS'Y
11. Retainer key
12. Valve rod and plunger ASS'Y
13. Reaction disc
14. Spring
15. Push rod
16. Front shell ASS'Y
17. Retainer
18. Seal

Rear shell

Fit a wrench onto the studs of the rear shell. Rotate the rear shell counterclockwise to the unlocked position.

CAUTION

- Before separating the front and rear shell, make mating marks to be used for reassembly.
- The rear shell is spring-loaded: loosen it carefully.

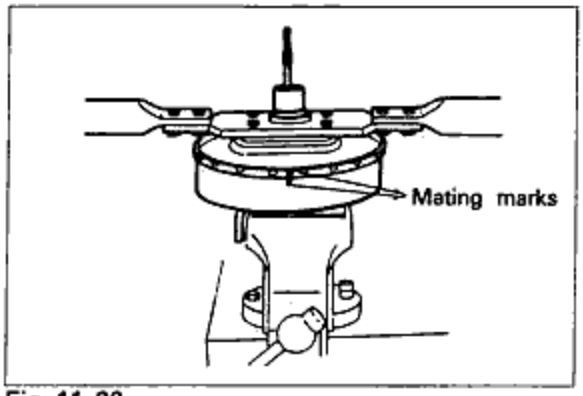

Fig. 11-26

Retainer key

Press the valve rod to remove the valve retainer key. Remove the valve rod and plunger assembly.

CAUTION

- The valve rod and plunger must be serviced as an assembly.

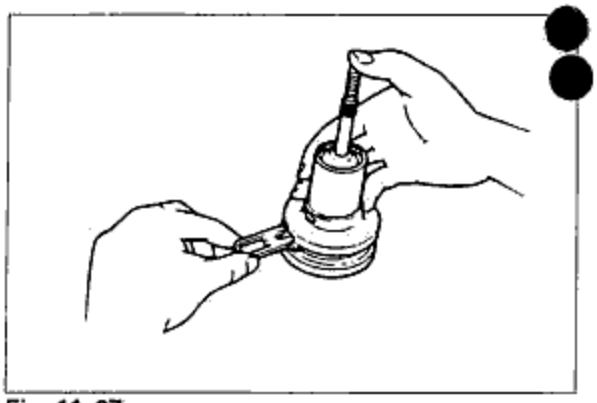

Fig. 11-27

◆ INSPECTION

1. Inspect all rubber parts. Wipe free of fluid and carefully inspect each rubber part for cuts, nicks, or other damage.
2. Check the power piston for cracks, distortion, chipping, and/or damaged seats.
3. Inspect the reaction disc for rubber deterioration.
4. Check that the seats of the valve rod and plunger are smooth and free of nicks and dents. Replace if defective.
5. Inspect the front and rear sheels for scratches, scores, pits, dents, or other damage.
6. Check the diaphragm for cuts or other damage.

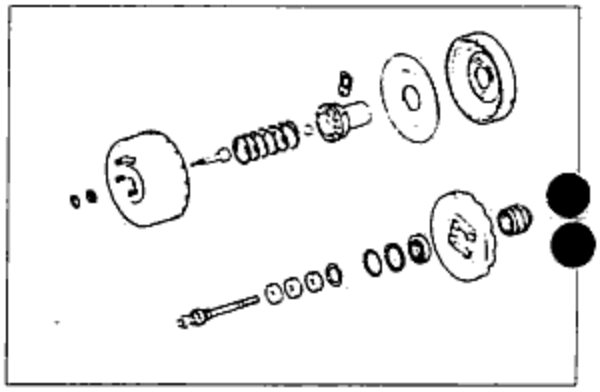

Fig. 11-28

◆ ASSEMBLY

CAUTION

- When assembling, coat the parts shown in the figure at the left with silicon grease.

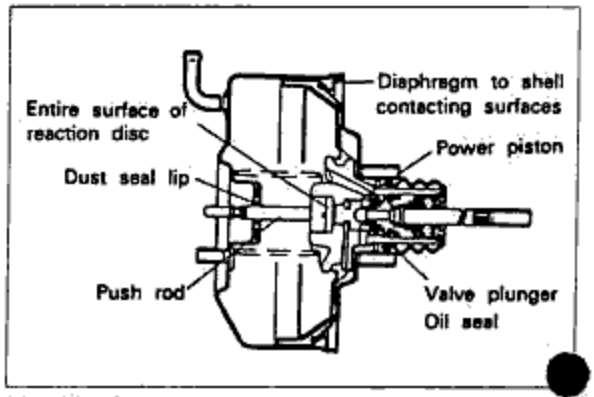

Fig. 11-29

1. Valve rod and plunger assembly
2. Air filter and silencer
3. Retainer

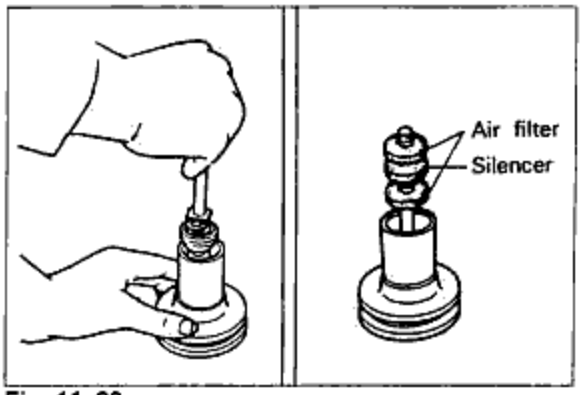

Fig. 11-30

4. Retainer key

CAUTION

- Push down the valve rod, align the groove in the valve plunger with the slot of the power piston, and then insert the valve retainer key.

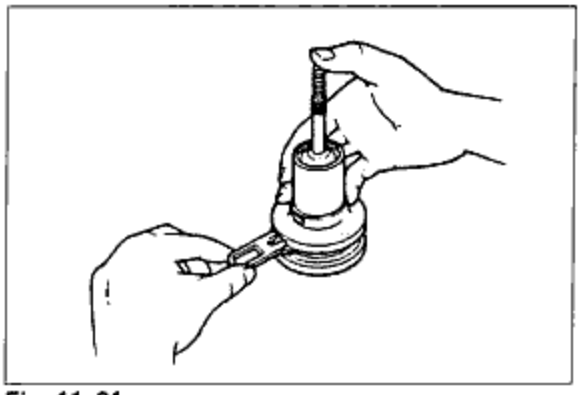
Fig. 11-31

5. Diaphragm to power piston and plate

CAUTION

- Make certain that the diaphragm is well seated in the groove.

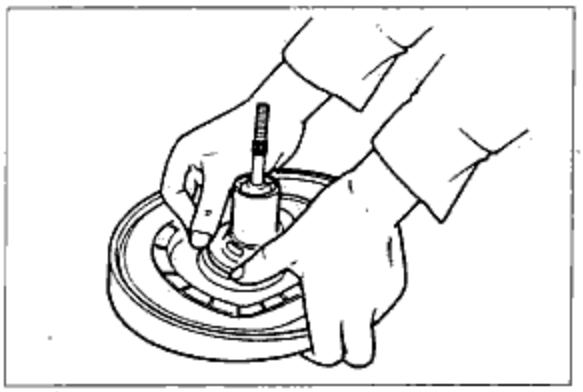
Fig. 11-32

6. Rear shell assembly

CAUTION

- Carefully guide the tube end of the power piston through the seal in the rear shell.

7. Dust boot

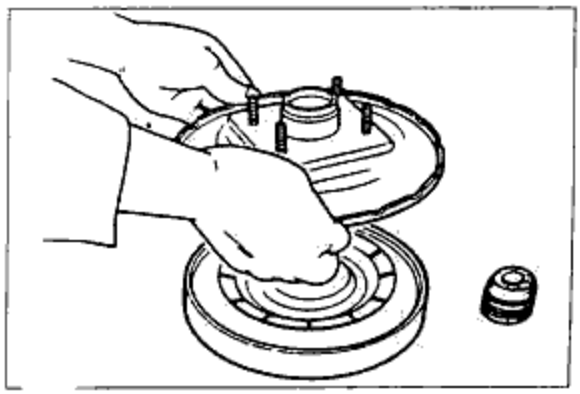
Fig. 11-33

8. Reaction disc into power piston(by using push rod)

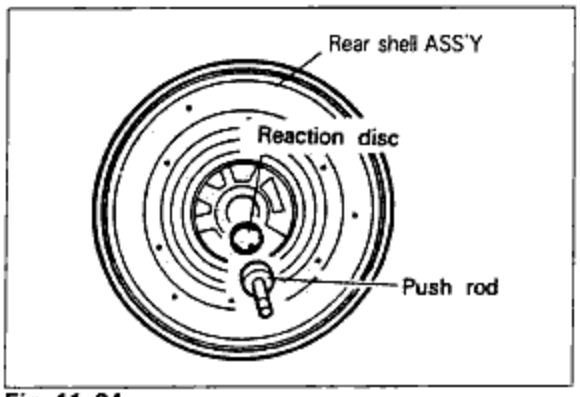

Fig. 11-34

9. Retainer and dust seal into front shell

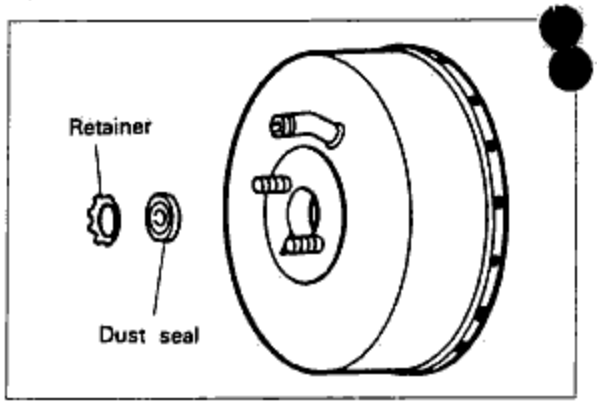

Fig. 11-35

10. Front shell assembly

CAUTION

· Place the front shell assembly in a vise.

11. Push rod
12. Return spring

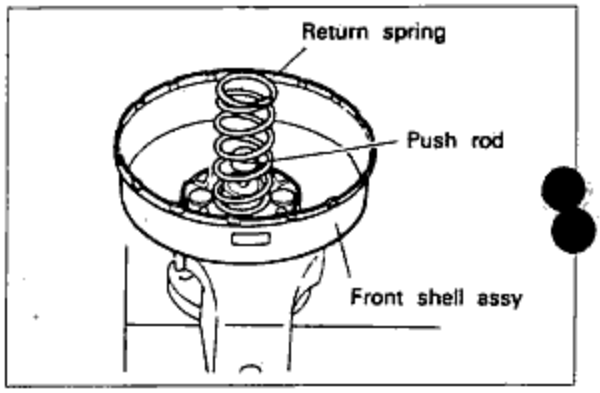

Fig. 11-36

13. Rear shell(assembled)
Use suitable wrench.

CAUTION

· Press the rear shell down and rotate it clockwise until the mating marks are aligned.

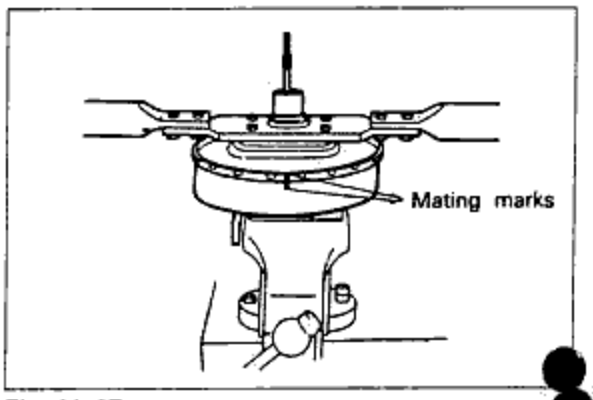

Fig. 11-37

VACUUM PUMP

Removal(Refer to section 5)

DISASSEMBLY

Disassemble in the numbered order shown in the figure

1. Bolt
2. Washer
3. Connector pipe
4. Check valve
5. Washer
6. Bolt
7. Housing
8. Rotor
9. Vane
10. O-ring
11. End cover

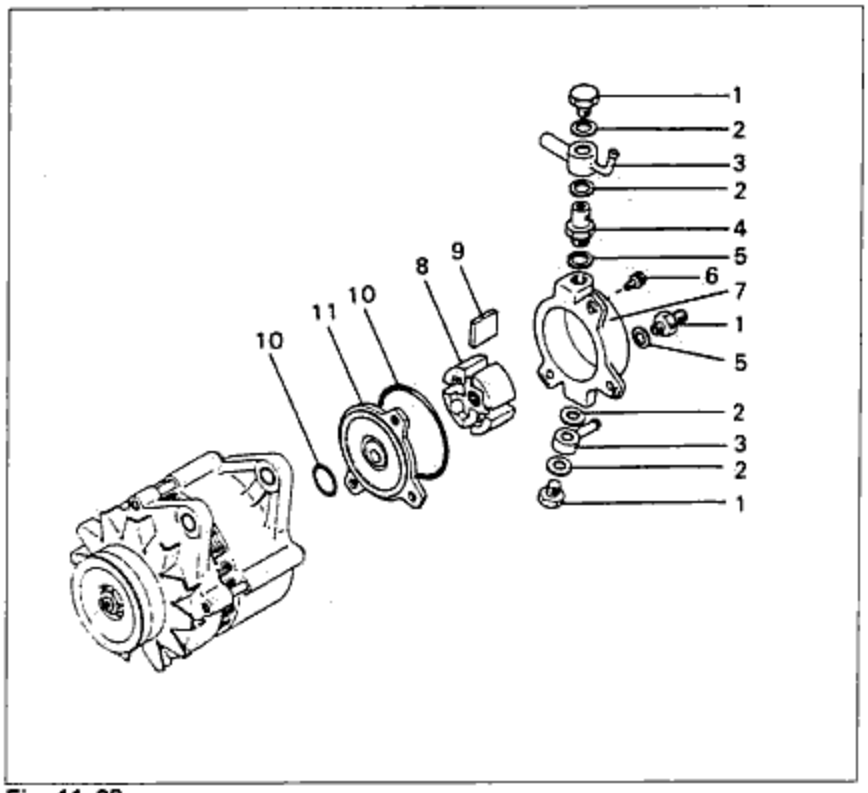

Fig. 11-38

INSPECTION

Check the following points. Replace parts if necessary.

1. Check the vanes for wear or damage.

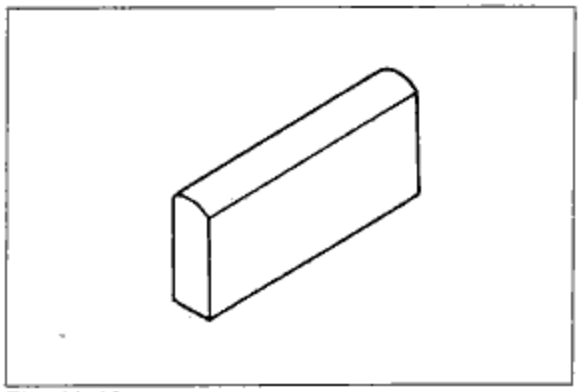

Fig. 11-39

2. Check the casing inner surface, end cover and drive end frame sides for damage or abnormal wear.

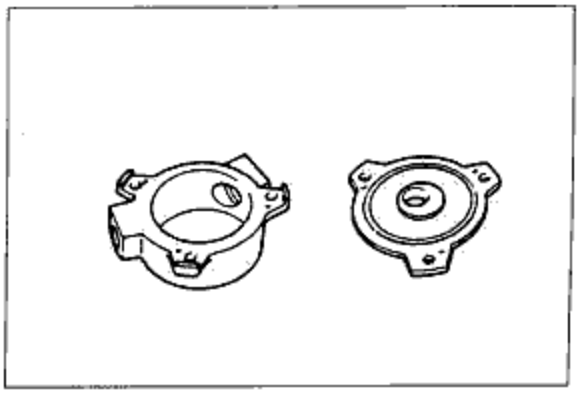

Fig. 11-40

◈ ASSEMBLY AND INSTALLATION

Note the following points during assembly and installation.

CAUTION

- The O-ring cannot be reused: use a new one.
- Coat the sliding parts with engine oil.
- After installation, and with the engine idling, disconnect the vacuum pump discharge port and check to be sure that the oil is circulating within the pump.

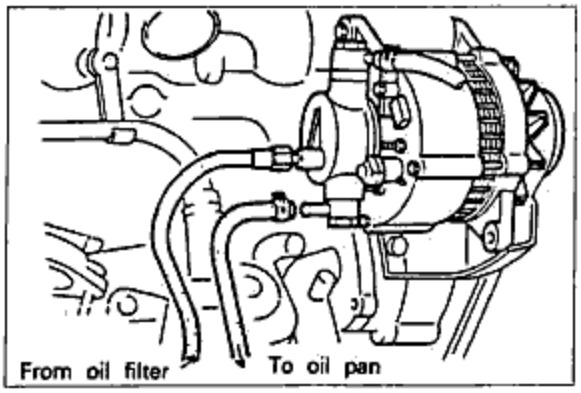

Fig. 11-41

◇ FRONT DISC BRAKE

◈ REMOVAL

Jack up the front of the vehicle and support it with a safety stand. Remove the wheels and remove the front disc brakes in the numbered order shown in the figure.

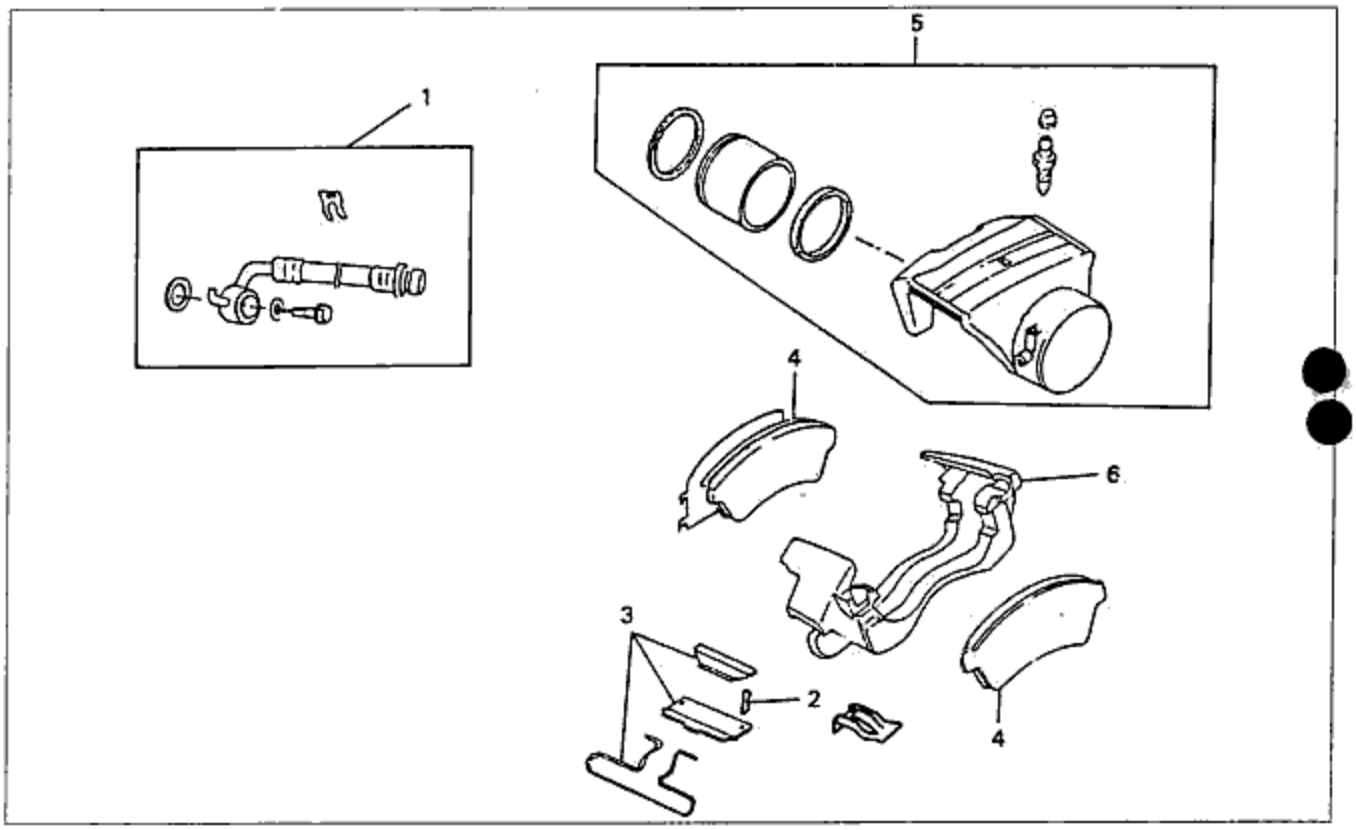

Fig. 11-42

1. Flexible hoses(remove after joining the flexible hoses with the vice grip)
2. Remove clip
3. Remove plate and caliper anti-rattle clip
4. Remove the pad and shim
5. Caliper
6. Carrier

◆ DISASSEMBLY

As shown in the figure, place a piece of wood on the caliper, and then blow compressed air through the flexible hose connection hole to force the piston out of the caliper.

CAUTION
- **Blow the compressed air a little at a time, because otherwise the piston might jump out.**

When installing, coat the piston and the cylinder inside with brake fluid, and fit the piston straight into the cylinder.

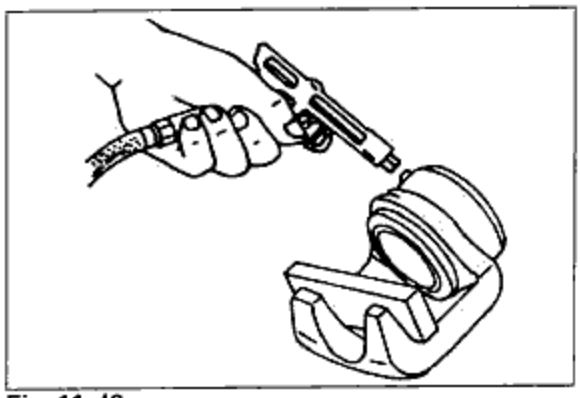

Fig. 11-43

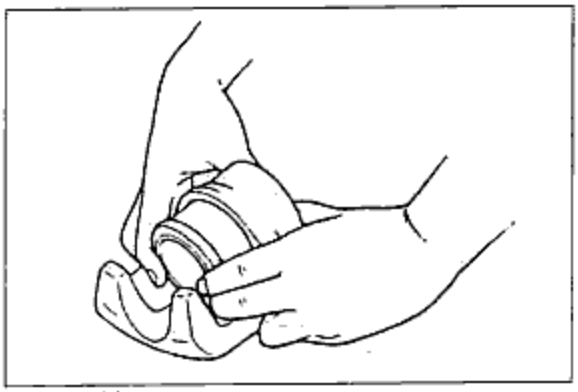

Fig. 11-44

◆ ASSEMBLY

Assembly is in the reverse order of disassembly. Note the following points.

CAUTION
- **After mounting the dust seal to the piston, attach it together with the piston, to the caliper.**
- **Liberally coat the piston and cylinder with brake fluid.**
- **Coat the piston seal with the pink grease in the seal kit.**

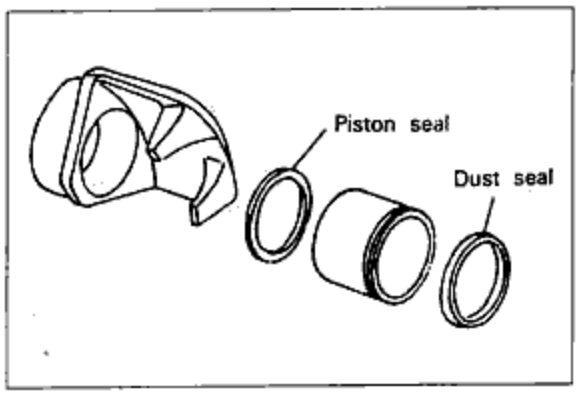

Fig. 11-45

◆ INSPECTION

Check the points below. Replace parts if necessary.

Disc pad

1. Check for excess oil or grease.
2. Check for abnormal wear or cracks.
3. Check for deterioration or damage by heat.
4. Check the remaining thickness.

1mm(0.04in) or more

CAUTION
- **Do not clean the lining by using the sand paper.**

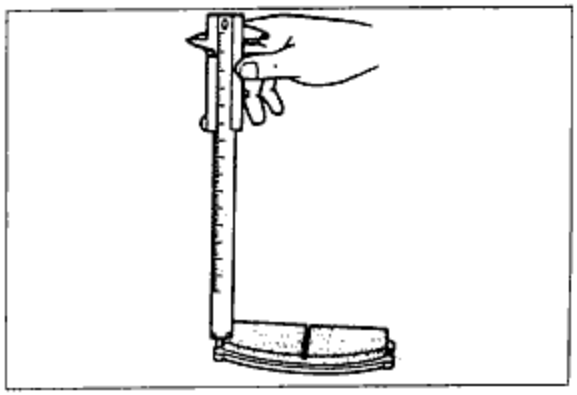

Fig. 11-46

Disc plate

1. Measure the deflection of disc plate with the dial gauge at the edge and center of disc plate during the disc plate go round.

   Deflection Limit:0.15mm(0.006in)

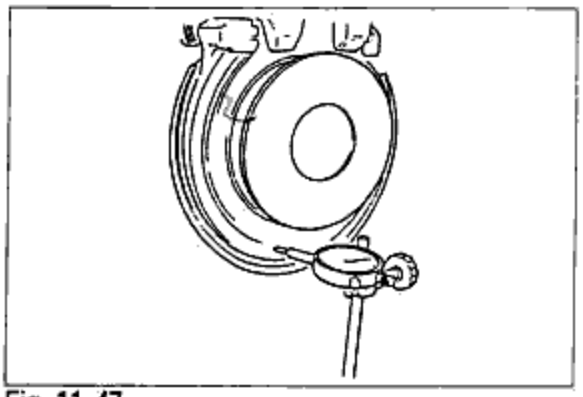

Fig. 11-47

2. Wear or damage

   Plate thickness;
   Standard value:20mm(0.79in)
   Limit:18mm(0.71in)

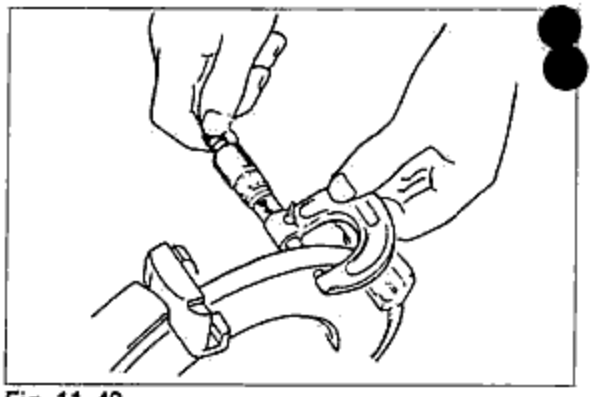

Fig. 11-48

Caliper

1. Check the cylinder and piston for wear or rust.
2. Check the caliper body for damage or cracks.
3. Check the dust cover for damage or a poor seal.

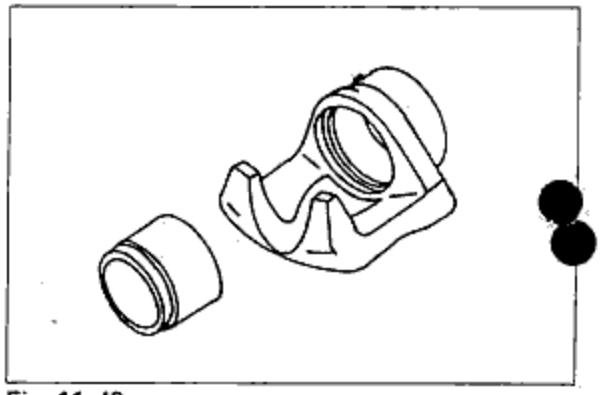

Fig. 11-49

◆ INSTALLATION

Installation is in the reverse order of removal. Perform the following after installation.

1. Air bleeding
2. Check for contact of the flexible hose with other parts.
3. Check for fluid leakage from the brake line.
4. Pump the pedal 2 or 3 times to check the braking effectiveness.

REAR DRUM BRAKE

REMOVAL

1. Jack up the rear of the vehicle and support it by safety stands.
2. Remove the wheels and remove the rear drum brakes in the numbered order shown in the figure.

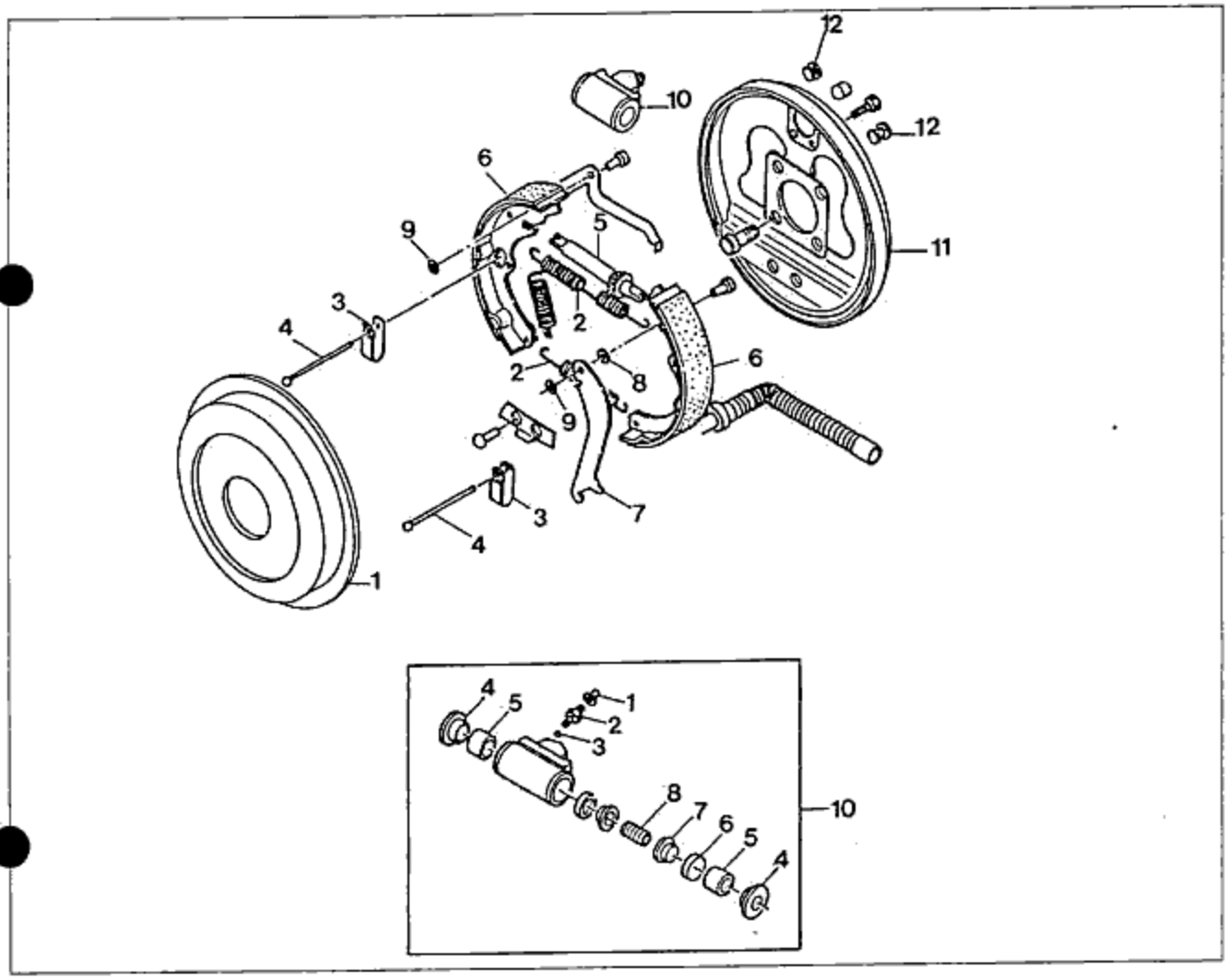

Fig. 11-50

1. Brake drum
2. Return spring
3. Shoe hold spring
4. Shoe hold pin
5. Push rod ASS'Y
6. Shoe ASS'Y
7. Parking lever ASS'Y
8. Wave washer
9. Snap ring
10. Wheel cylinder body

10-1. Bleeder screw cap
-2. Bleeder screw
-3. Steel ball
-4. Dust boot
-5. Piston
-6. Piston cup
-7. Filling block
-8. Spring

11. Back plate ASS'Y
12. Plug

◈ INSPECTION

Check the points below. Repair or replace parts if necessary.

1. Check for scratches, uneven wear or abnormal wear inside the drum.

NOTE

- **Repair it if the problem is minor.**

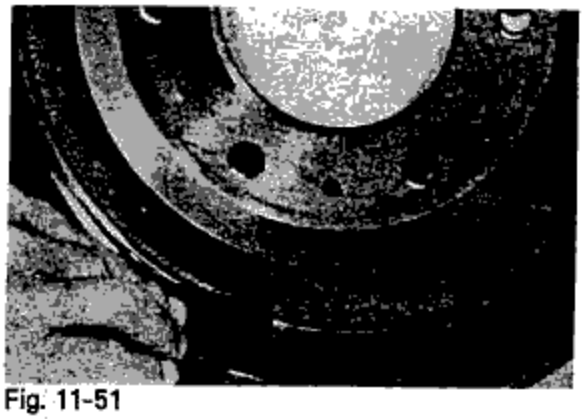

Fig. 11-51

2. Drum inner diameter

Standard: 260mm (10.24in)
Limit: 261mm (10.28in)

CAUTION

- **When repairing or replacing the drum, check its contact with the shoe.**

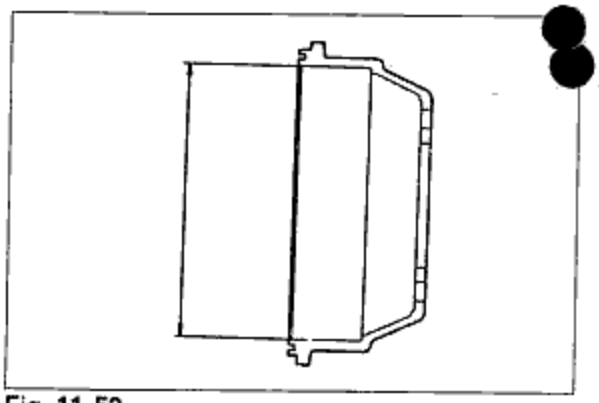

Fig. 11-52

3. Check for peeling, cracking or extremely uneven wear of the lining.
4. Check the lining wear.

Standard: 5.0mm (0.20in)
Limit: 1.0mm (0.04in)

CAUTION

- **When replacing the shoe assembly, replace as a set, and with an assembly of the same quality.**

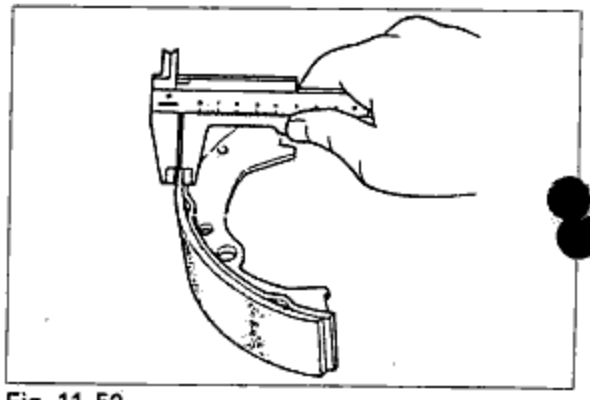

Fig. 11-53

5. Check for weakness or breakage of springs.

◈ INSTALLATION

Installation is in the reverse order of removal.
Note the following points.

1. Apply a grease to the wheel cylinder, moving parts of the shoe and the ⏚ part of the back plate.

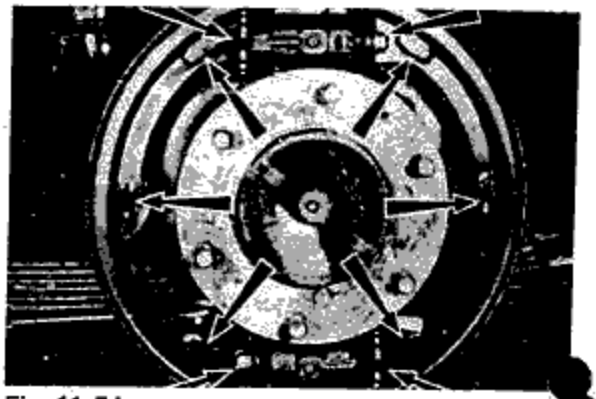

Fig. 11-54

2. When assembling each spring, both shoes be get a circle, and then adjust the shoe clearance.
3. Check the brake effect.

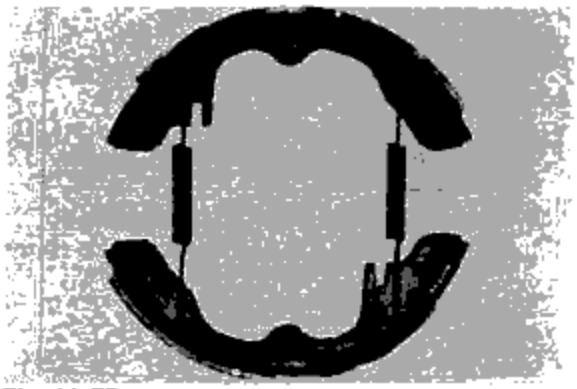

Fig. 11-55

WHEEL CYLINDER

REMOVAL

1. Remove the brake drum and shoe.
2. Remove the brake pipe from the wheel cylinder.

CAUTION

- **Use the flare nut wrench(49 0259 770A).**

3. Remove the wheel cylinder.

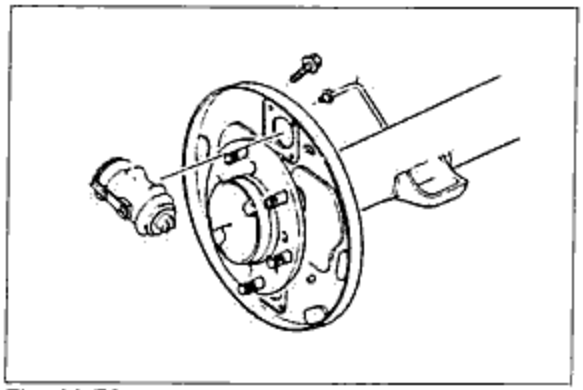

Fig. 11-56

DISASSEMBLY

1. Disassemble in the numbered order shown in the figure.

1. Bleeder screw cap	5. Piston
2. Bleeder screw	6. Piston cup
3. Steel ball	7. Filling block
4. Dust boot	8. Spring

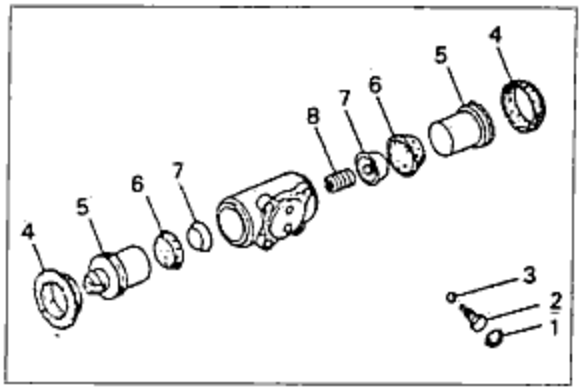

Fig. 11-57

INSPECTION

Check the following points, and replace it if necessary.

1. Check the cylinder and the piston for wear or damage or rust.

   The clearance of the cylinder and the piston:
   Standard:0.040~0.073mm(0.0016~0.0028in)
   Limit:0.15mm(0.006in)

2. Check the cylinder body for cracks or damage.
3. Check the contact surfaces of the piston for abnormal wear.
4. Check the spring for weakness or damage.
5. Check the caulking state of the spring rivet.

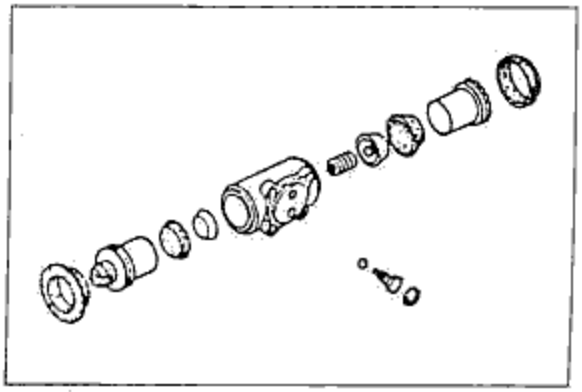

Fig. 11-58

◈ ASSEMBLY

Assemble in the numbered order of disassembly and note the following points.

1. Use a new piston cup and dust boot.

CAUTION

- **Check the size if it has the other side on the piston cup.**

2. Enoughly coat the piston and the cylinder with the brake fluid.
3. Be careful not to let foreign material in, and not to scratch the inside of the cylinder and the piston.

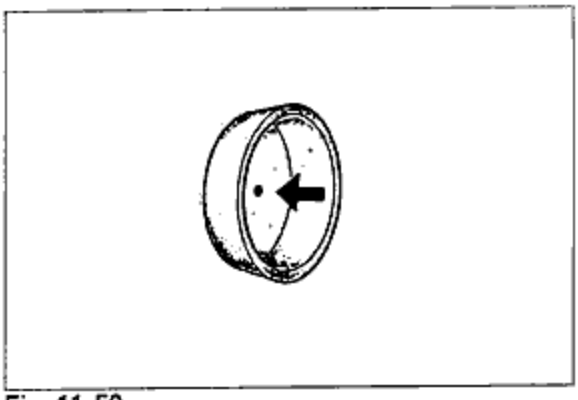

Fig. 11-59

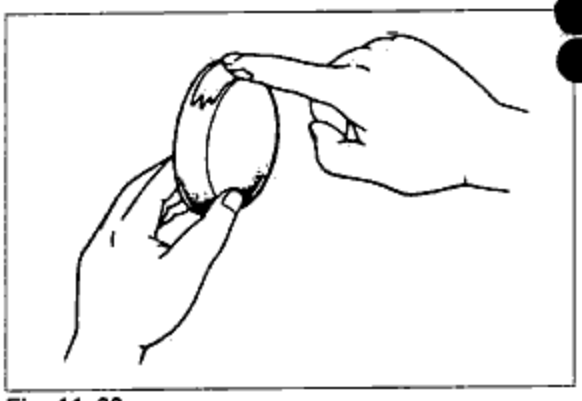

Fig. 11-60

◈ INSTALLATION

Install in the reverse order of removal, and bleed the air after installation, and then check the brake fluid leakage.

◈ ADJUSTMENT

Adjust the shoe clearance as follows.

1. Remove the plug.
2. Lock the drum to turn the adjuster to arrow direction by using the adjust screwdriver.
3. Turn the adjuster 5 notches in the direction opposite to the arrow.
4. Bleed the air and check the brake fluid leakage.
5. Check the brake effect.

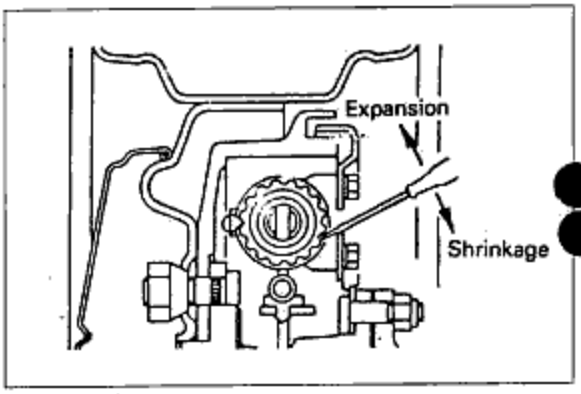

Fig. 11-61

⊠ BACK PLATE

◈ REMOVAL

1. Remove the brake drum and the shoe assembly.
2. Remove the rear axle shaft.
3. Remove the wheel cylinder.
4. Remove the back plate.

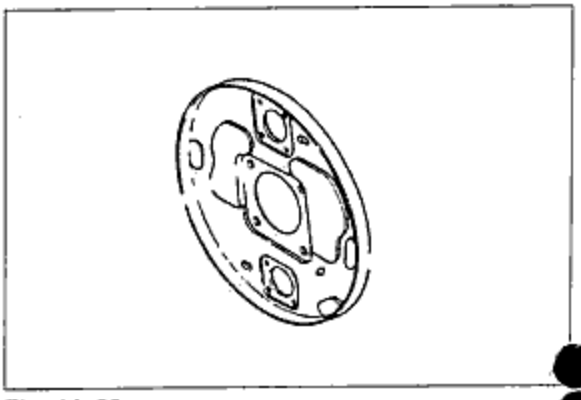

Fig. 11-62

◆ INSPECTION

Replace it if necessary.

◆ INSTALLATION

Install in the reverse order of removal and note the following points.

1. Tighten the specified torque.

   Back plate and rear axle casing:
   6.0~6.8kg·m(43.4~49.2ft·lb)

2. Apply a grease to the wheel cylinder, moving parts of the shoe and the ⏚ part of the back plate.
3. Adjust the shoe clearance.
4. Bleed the air and check the brake fluid leakage.

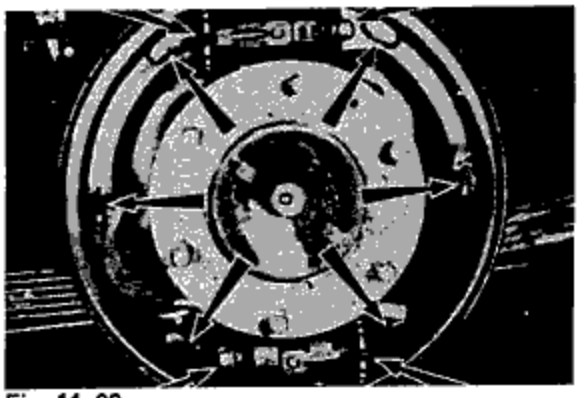

Fig. 11-63

◇ BRAKE LINES

◆ ON-VEHICLE INSPECTION

Check the points below. Replace parts if necessary.

1. Check for cracking, damage or corrosion of the brake hose.
2. Check for damage to the brake hose threads.
3. Check for scars, cracks or swelling of the flexible hose.
4. Check all lines for fluid leakage.

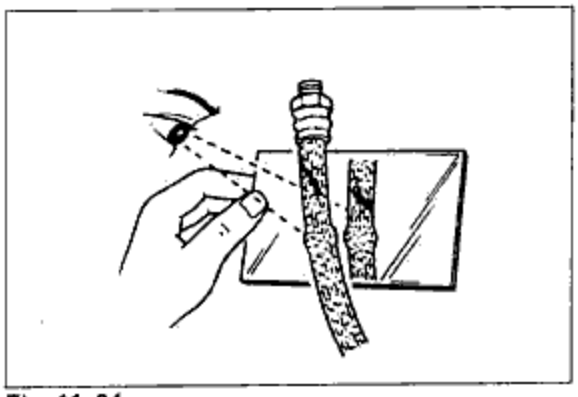

Fig. 11-64

◆ REMOVAL AND INSTALLATION

Note the following points during installation and removal.

1. Be sure the brake hose does not contact other parts. Secure it with clips.
2. When connecting the brake hose to joints, don't tighten too tight.
3. When connecting the flexible hose, be sure it is not twisted.
4. When disconnecting the flexible hose and brake line, remove the clips after loosening the flare nut.
   When connecting, tighten the flare nut to the specified torque after attaching the clips.
5. After connecting the flexible hose, check to be sure that it doesn't contact other parts when the vehicle bounces, or when the steering wheel is turned all the way to the left or right.
6. When disconnecting the lines, be sure to bleed air from the brake line.

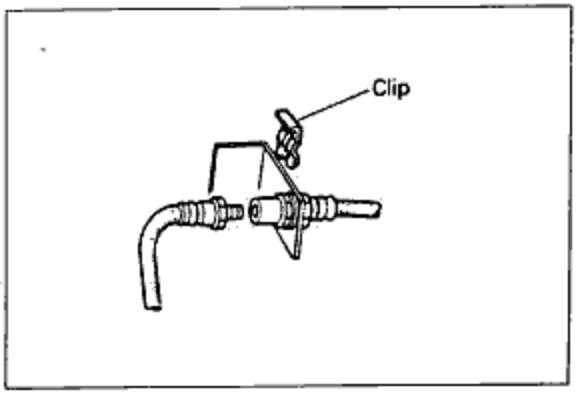

Fig. 11-65

◈ AIR BLEEDING

Bleed air as described below.

1. Jack up the vehicle and support it by safety stands.
2. Fill the reserve tank with brake fluid. Be sure that the reserve tank is at least half full at all times during the air bleeding process.

CAUTION

- **Be careful not to spill brake fluid onto a painted surface.**
- **Use only the specified brake fluid. Do not mix it with any other type.**

3. After removing the bleeder cap, connect one end of a transparent vinyl tube to the bleeder screw and place the other end in a receptacle.
4. One person should depress the brake pedal a few times, and then hold it in the depressed position.
5. A second person should loosen the bleeder screw, drain out the fluid, and retighten the screw.

CAUTION

- **The two people should stay in voice contact with each other.**
- **Be sure the pedal remains depressed until the work is completed.**

6. Repeat steps 4 and 5 until there is no more air in the vinyl tube.

CAUTION

- **After tightening the bleeder screw, check to be sure that there is no fluid leakage.**
- **Be sure to carefully clean away and spilled fluid by using rags.**

7. After bleeding the air, add brake fluid to the reserve tank up to the specified level.

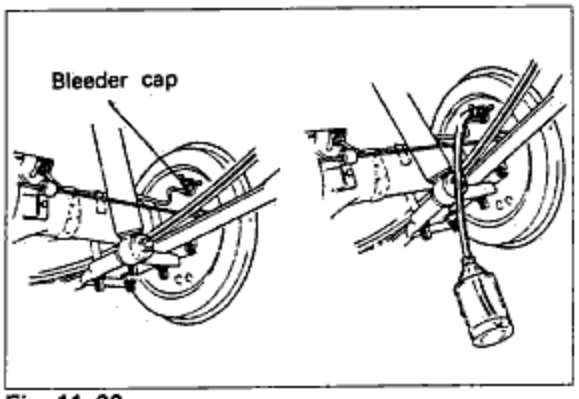

Fig. 11-66

WHEEL & TIRE

12

- **SPECIFICATION** ..... 12—2
  - WHEEL ALIGNMENT ..... 12—2
  - TIRE ..... 12—2
  - TIGHTENING TORQUE ..... 12—2
- **TROUBLESHOOTING GUIDE** ..... 12—3
- **SPECIAL NOTES ABOUT WHEELS AND TIRES** ..... 12—4
  - NOTES REGARDING TIRE REPLACEMENT ..... 12—4
  - INSPECTION/ADJUSTMENT ..... 12—4
- **REMOVAL/INSTALLATION** ..... 12—7
  - TIRE ROTATION ..... 12—7
- **WHEEL BALANCE ADJUSTMENT** ..... 12—7

SPECIFICATION

WHEEL ALIGNMENT

Toe-in in(mm)	0~0.039(0~1)
Camber	30′ ±30′
Caster	7°30′
King pin	8°30′ ±30′

TIRE

Tire size	Air pressure kpa(kg/cm², psi)	
	Front tires	Rear tires
P205/75R15	204(2.1, 30)	
P235/75R15	204(2.1, 30)	
LT215/75R15	218(2.2, 32)	
LT235/75R15	218(2.2, 32)	

TIGHTENING TORQUE

Item	Torque N·m(kg·m, ft·lb)
Lug nut	88~108(9~11, 65~80)

⊠ TROUBLESHOOTING GUIDE

Problem	Possible cause	Correction
Excessive or irregular tire wear	Refer to page 12-5 for details	
Premature tire wear	Incorrect tire pressure	Adjust
Tire squeal	Incorrect tire pressure	Adjust
	Tire deterioration	Replace
Road noise or body vibration	Insufficient tire pressure	Adjust
	Unbalanced wheel(s)	Adjust
	Deformed wheel(s) or tire(s)	Repair or replace
	Irregular tire wear	Replace
"Shake" occurs (Steering wheel vibrates up/down)	Excessive tire and wheel runout	Replace
	Loose lug nuts	Tighten
	Unbalanced wheel(s)	Adjust
	Cracked or worn engine mount rubber	Replace
	Cracked or worn transaxle mount rubber	Replace
"Shimmy" occurs (Steering wheel vibrates left/right)	Excessive tire and wheel runout	Replace
	Loose lug nuts	Tighten
	Unbalanced wheel(s)	Adjust
	Irregular tire wear	—
	Insufficient tire pressure	Adjust
	Damaged or worn front wheel bearing	Replace
	Malfunction of steering system	—
	Malfunction of suspension	—
Steering wheel pulls to one side	Incorrect tire pressure	Adjust
	Excessive or irregular tire wear	—
	Malfunction of steering system	—
	Malfunction of braking system	—
	Malfunction of suspension	—
General driving instability	Unequal tire pressures	Adjust
	Deformed wheel(s) or tire(s)	Repair or replace
	Loose lug nuts	Tighten
	Malfunction of steering system	—
	Malfunction of suspension	—
Uneven(one-sided) braking	Unequal tire pressures	Adjust
	Malfunction of braking system	—
Heavy handling	Insufficient tire pressures	Adjust
	Malfunction of steering system	—
	Malfunction of suspension	—
Steering wheel doesn't return properly	Insufficient tire pressure	Adjust
	Malfunction of steering system	—
	Malfunction of suspension	—

⊠ SPECIAL NOTES ABOUT WHEELS AND TIRES

1. Do not use wheels or tires other than the specified types.
2. Aluminum wheels are easily scratched. When washing them, use a soft cloth, never a wire brush. If the vehicle is steam cleaned, do not allow boiling water to contact the wheels.
3. If alkaline compounds(such as saltwater or road salts) get on aluminum wheels, wash them as soon as possible to prevent damage. Use only a neutral detergent.

◈ NOTES REGARDING TIRE REPLACEMENT

Note the following points when tires are to be removed from or mounted onto the wheels.

1. Be careful not to damage the tire bead, the rim bead, or the edge of the rim.
2. Use a wire brush, sandpaper, or cloth to clean and remove all rust and dirt from the rim edge and the rim bead.
3. When cleaning aluminum wheels, use a soft cloth, never a wire brush or sandpaper.
4. Remove any pebbles, glass, nails, and other foreign items embedded in the tire tread.
5. Be sure the air valve is installed correctly.
6. Apply a soapy solution to the tire bead and the edge of the rim.
7. If a tire iron is used to change a tire on an aluminum wheel, be sure to use a piece of rubber between the iron lever and the wheel to avoid damage to the wheel. Work should be done on a rubber mat, not on a hard or rough surface.

◈ INSPECTION/ADJUSTMENT

Air pressure

Check the air pressure of all tires, including the spare tire, with an air pressure gauge. If necessary, adjust the air pressure.

Tire size	Air pressure kpa(kg/cm², psi)	
	Front tires	Rear tires
P205/75R15	204(2.1, 30)	
P235/75R15	204(2.1, 30)	
LT215/75R15	218(2.2, 32)	
LT235/75R15	218(2.2, 32)	

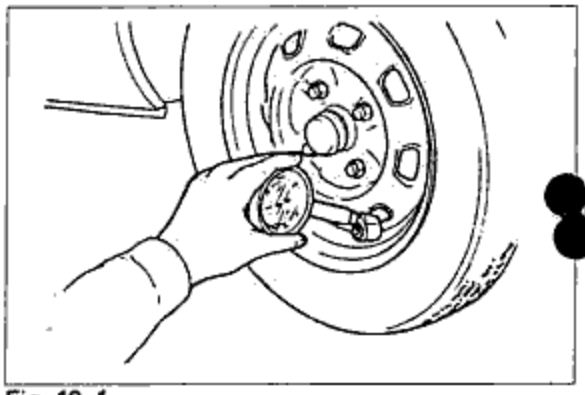

Fig. 12-1

Air leakage

Verify that there is no air leakage from the air valve.

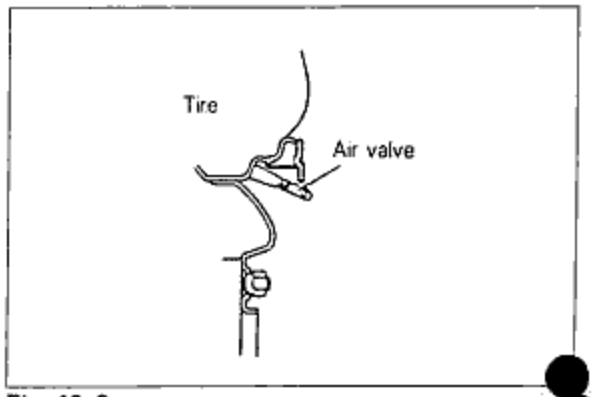

Fig. 12-2

Irregular tire wear

Abnormal tire wear patterns, such as shown in the illustration, may occur. Refer to the chart for the possible causes and remedies.

Wear condition	Possible cause	Remedy
SHOULDER WEAR 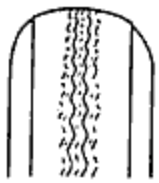	· Underinflation(both sides worn) · Hard cornering · Lack of rotation	· Measure and adjust pressure · Reduce speed · Rotate tires
CENTER WEAR 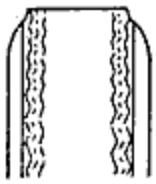	· Overinflation · Lack of rotation	· Measure and adjust pressure · Rotate tires
FEATHERED EDGE 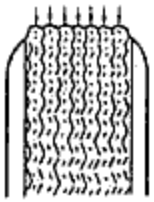	· Incorrect toe adjustment	· Adjust toe-in
UNEVEN WEAR 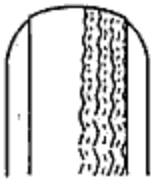	· Incorrect camber or caster · Malfunctioning suspension · Unbalanced wheel · Out-of-round brake drum or disc · Lack of rotation	· Repair or replace axle or suspension parts · Repair or replace suspension · Balance or replace · Correct or replace · Rotate tires

Tire wear

1. Check the remaining tread.

   Remaining tread
   Standard tires: 1.6mm(0.063in) min.
   Snow tires: 50% of tread

2. The tire should be replaced if the wear indicators are exposed.

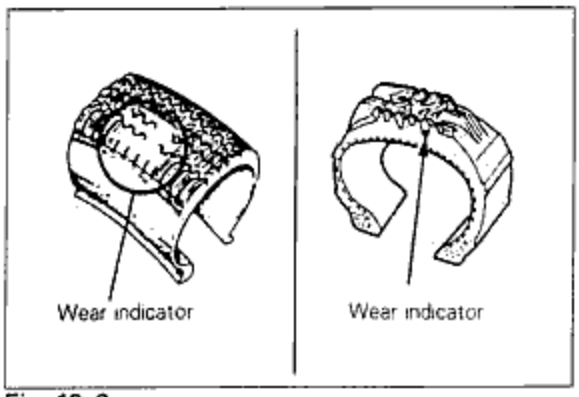

Fig. 12-3

Inspection(tire and wheel)

The wheel or tire should be replaced if any crack, damage, deformation or other problem is found.

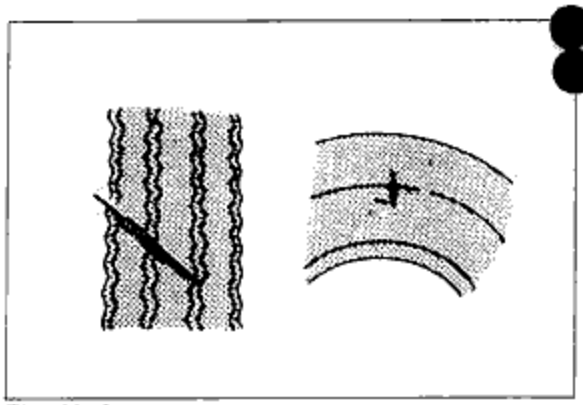
Fig. 12-4

Wheel and tire runout

1. Jack up the vehicle and place it on safety stands.
2. Set the probe of a dial indicator against the wheel, and measure the runout through one full revolution.

   Runout: Wheel 1.5mm(0.06in) max.
   Tire 2.0mm(0.79in) max.

3. Replace the wheel if necessary.

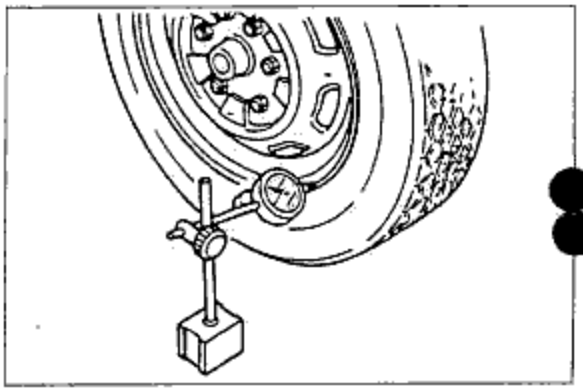
Fig. 12-5

CAUTION

- **Adjust wheel balance after replacement of a wheel or tire.**

Lug nut

1. Verify that the lug nuts are tightened to the specified torque.

   Tightening torque:
   88~108N·m(9~11kg·m, 65~80ft·lb)

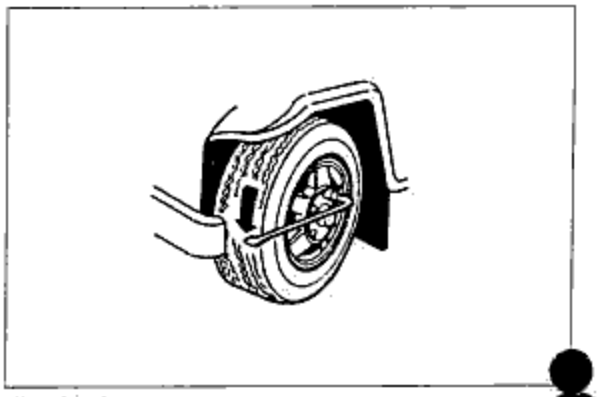
Fig. 12-6

REMOVAL/INSTALLATION

1. The wheel-to-hub contact surfaces must be clean.
2. Tighten the lug nuts to the specified torque.

Tightening torque:
88~108N·m(9~11kg·m, 65~80ft·lb)

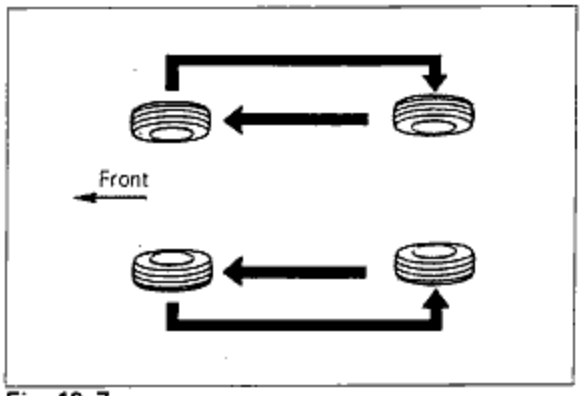

Fig. 12-7

TIRE ROTATION

To prolong tire life and assure uniform tire wear, rotate the tires every 12,000km(7,500miles).

CAUTION
- Use the best tires on the front axle.
- After rotating the tires, adjust each tire to the specified air pressure.

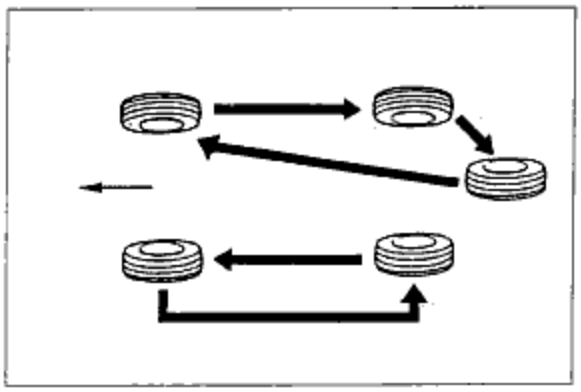

Fig. 12-8

WHEEL BALANCE ADJUSTMENT

If a wheel becomes unbalanced or if a tire is replaced or repaired, the wheel must be rebalanced to within specification.

Maximum unbalance(at rim edge):20g(0.71 oz)

CAUTION
- Do not use more than two balance weights on the inner or outer side of the wheel.
- If the total weight exceeds 100g(3.5 oz), rebalance after moving the tire around on the rim.
- Attach the balance weights tightly on the wheel.
- Select suitable balance weights for steel or aluminum alloy wheels.
- Do not use an on-car balancer on automatic transaxle models; it may cause transaxle damage.

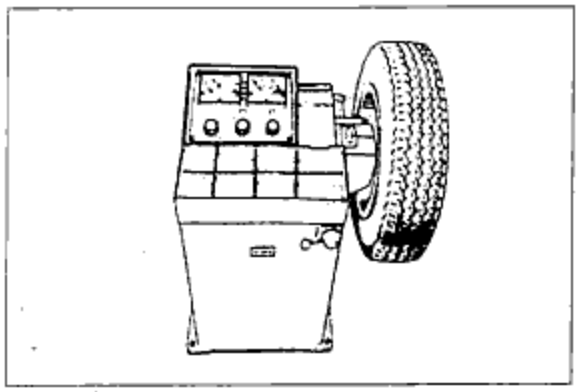

Fig. 12-9

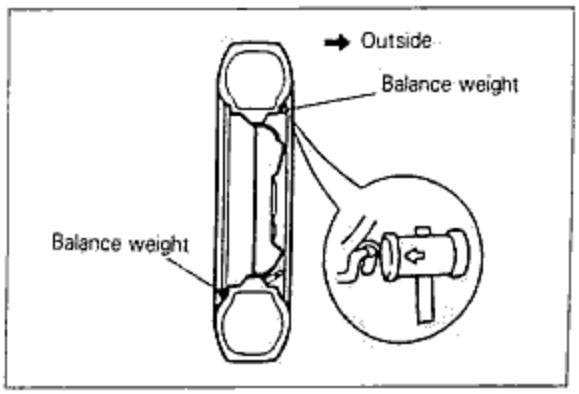

Fig. 12-10

SUSPENSION 13

- OUTLINE ..... 13—2
  - STRUCTURAL VIEW ..... 13—2
- SPECIFICATIONS ..... 13—4
- TROUBLESHOOTING GUIDE ..... 13—4
- ON-VEHICLE INSPECTION ..... 13—4
  - SHOCK ABSORBER ..... 13—4
  - STABILIZER ..... 13—4
  - SPRING ..... 13—5
- FRONT SHOCK ABSORBER ..... 13—5
  - REMOVAL AND INSTALLATION ..... 13—5
- REAR SHOCK ABSORBER ..... 13—5
  - REMOVAL AND INSTALLATION ..... 13—5
- STABILIZER ..... 13—6
  - REMOVAL AND INSTALLATION ..... 13—6
- FRONT SPRING ..... 13—6
  - REMOVAL ..... 13—6
  - INSTALLATION ..... 13—6
- REAR SPRING ..... 13—7
  - REMOVAL ..... 13—7
  - INSTALLATION ..... 13—7
- REPLACING RUBBER BUSHING ..... 13—7

OUTLINE

STRUCTURAL VIEW

Front suspension

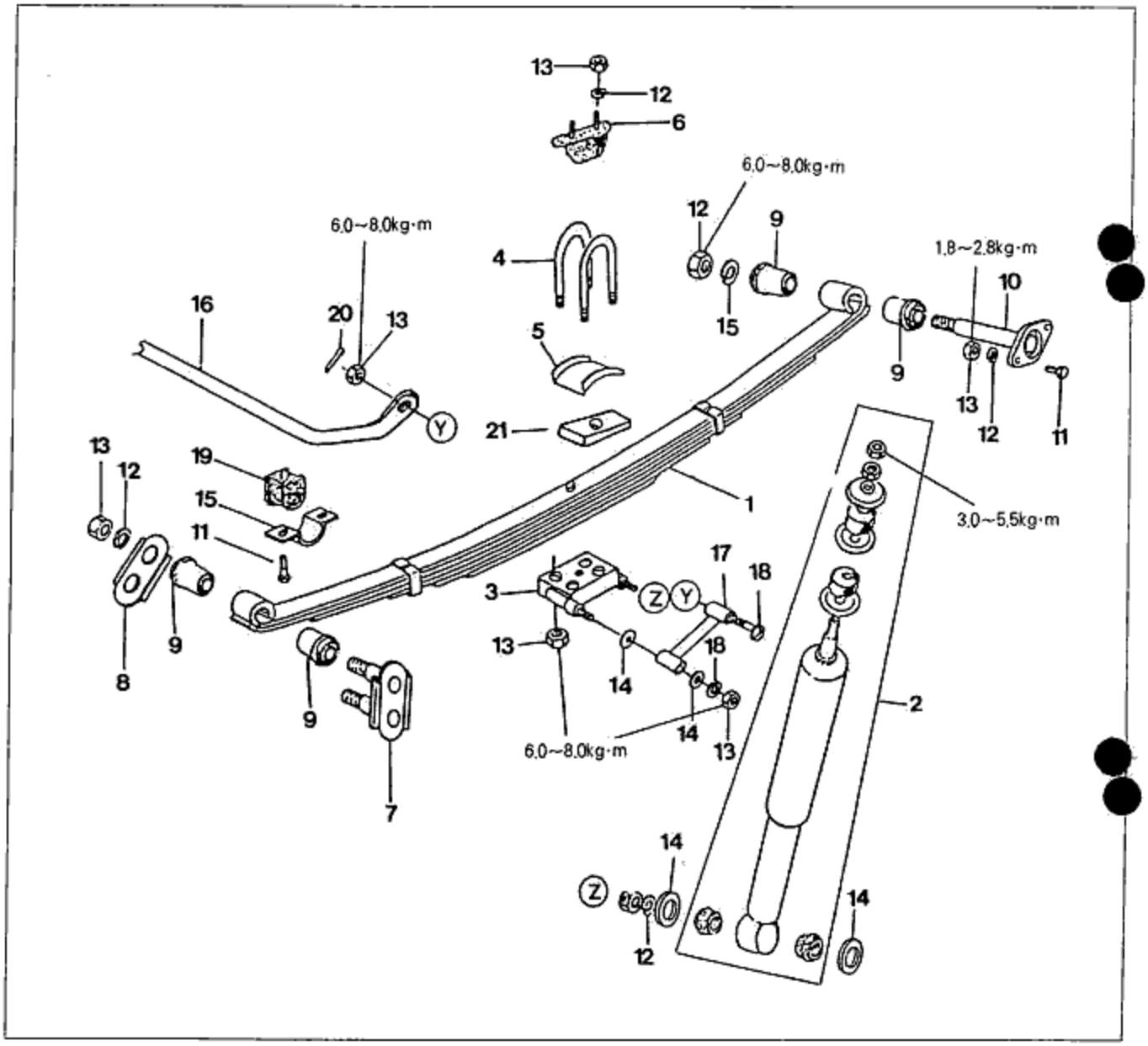

Fig. 13-1

1. Spring ASS'Y
2. Shock absorber
3. Seat ASS'Y
4. U-bolt
5. Set plate
6. Bumper rubber
7. Shackle ASS'Y
8. Shackle plate
9. Rubber bush
10. Pin ASS'Y
11. Bolt
12. Spring washer
13. Nut
14. Washer
15. Stabilizer plate
16. Stabilizer bar
17. Stabilizer rod ASS'Y
18. Stabilizer pin
19. Stabilizer rubber
20. Cotter pin
21. Caster wedge

Rear suspension

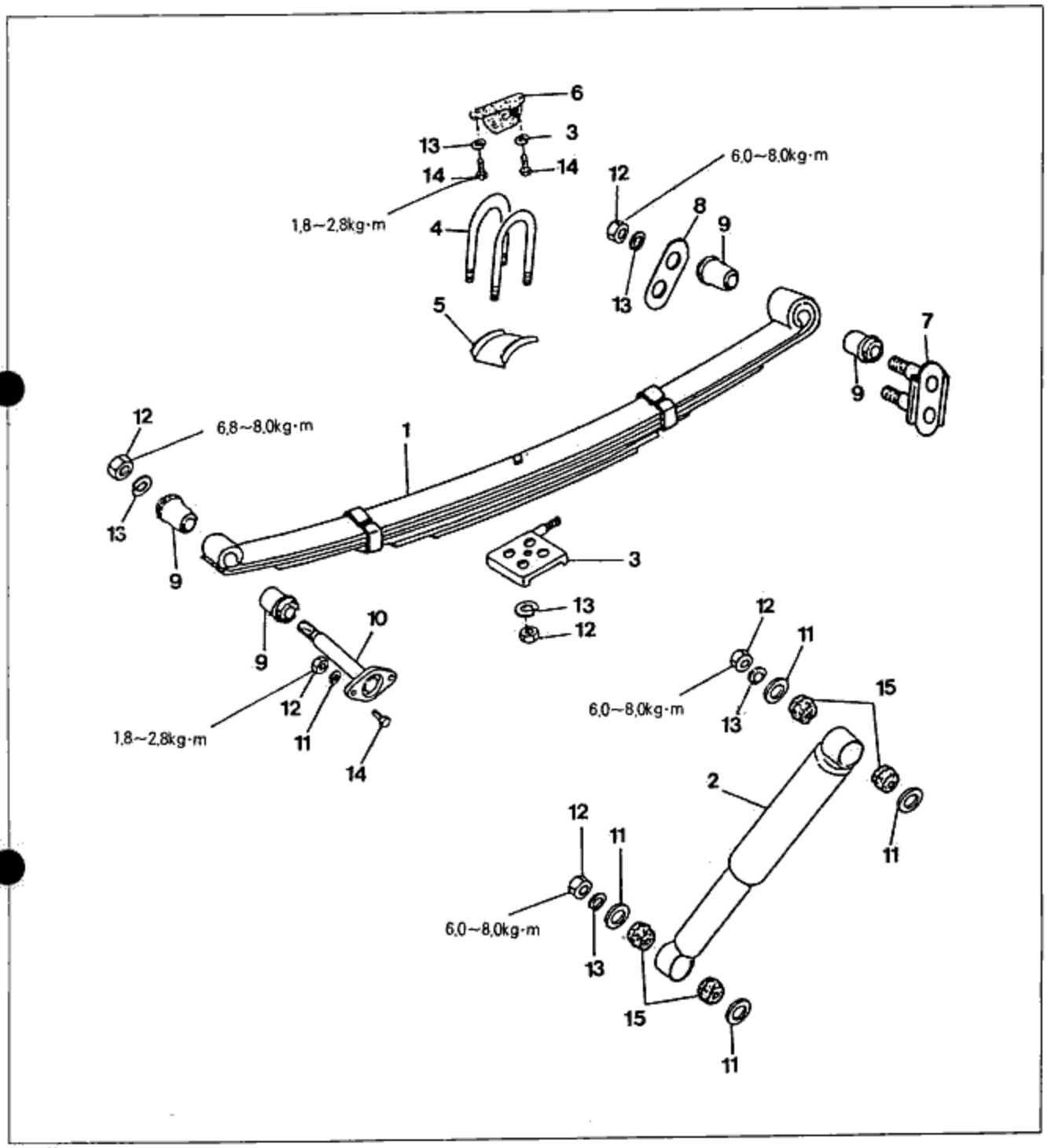

Fig. 13-2

1. Spring ASS'Y
2. Shock absorber
3. Spring seat
4. U-bolt
5. Plate set
6. Bumper rubber
7. Shackle ASS'Y
8. Shackle plate
9. Rubber bush
10. Pin ASS'Y
11. Washer
12. Nut
13. Spring washer
14. Bolt
15. Rubber bush

SPECIFICATIONS

Front	Suspension type	Axle type and leaf spring
	Spring type	Semielliptic leaf spring
	Shock-absorber type	Cylindrical, double acting(oil capacity:23cc)
	Stabilizer type	Torsion bar type
	Main spring(Span × Width × Thickness × Number)	950mm × 50mm × 5mm × 7
Rear	Suspension type	Axle type
	Spring type	Semielliptic leaf spring
	Shock-absorber type	Cylindrical, double acting
	Main spring(Span × Width × Thickness × Number)	1100mm × 60mm × 6mm × 7

TROUBLESHOOTING GUIDE

Problem	Possible cause	Correction
Body rolls	· Weakened stabilizer · Worn or deteriorated stabilizer bushing · Malfunction of shock absorbers	· Replace · Replace · Replace
Poor riding comfort	· Weakened leaf spring · Malfunction of shock absorbers · Excessive tire pressure	· Replace · Replace · Adjust
Body tilt	· Weakened leaf spring · Weakened stabilizer bushing	· Replace · Replace
Abnormal noise from suspension system	· Looseness of peripheral connections · Malfunction of shock absorbers · Worn or deteriorated stabilizer bushing	· Tighten · Replace · Replace

ON-VEHICLE INSPECTION

SHOCK ABSORBER

Check the following points. Repair or replace the part if a problem is found.

1. Loosen the mounting nuts of the shock absorbers.
2. Oil leakage or abnormal noise from shock absorbers
3. Deterioration or damage of bushings

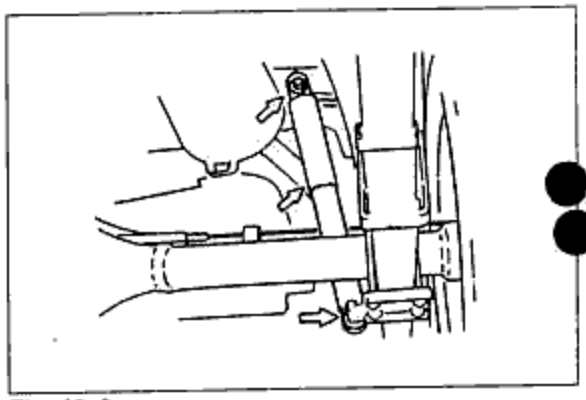

Fig. 13-3

STABILIZER

Check the following points, replace or repair the part if a problem is found.

1. Worn or deteriorated rubber bushing.
2. Bent, cracked, deteriorated, or damaged stabilizer.

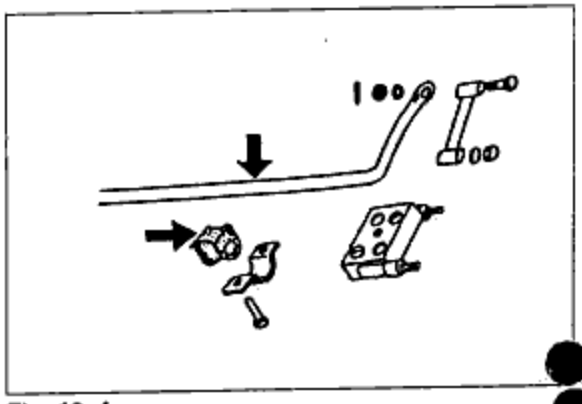

Fig. 13-4

◆ SPRING

Check the following points. Repair or replace the part if a problem is found.

1. Weakened or damaged leaf spring.
2. Damaged U-bolt.
3. Loosened mounting nuts of U-bolt, pin ass'y, or shackle.
4. Damaged or weakened stopper rubber.
5. Damaged or weakened rubber bush.

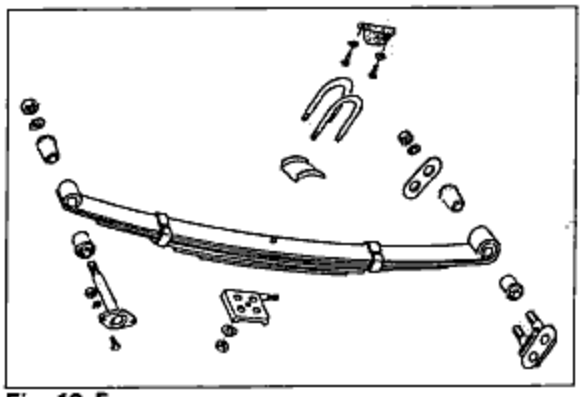

Fig. 13-5

◇ FRONT SHOCK ABSORBER

◆ REMOVAL AND INSTALLATION

1. Support the center part of the front axle and the frame with a jack.
2. Loosen the mounting nuts of the front shock absorber and then remove it.
3. Installation is in the reverse order of removal and tighten the mounting nuts to the specified torque.

CAUTION

- **The shock absorber can not adjust, charge and disassemble.**
  If it is damaged or oil leakage in the shock absorber, replace it with assembly.

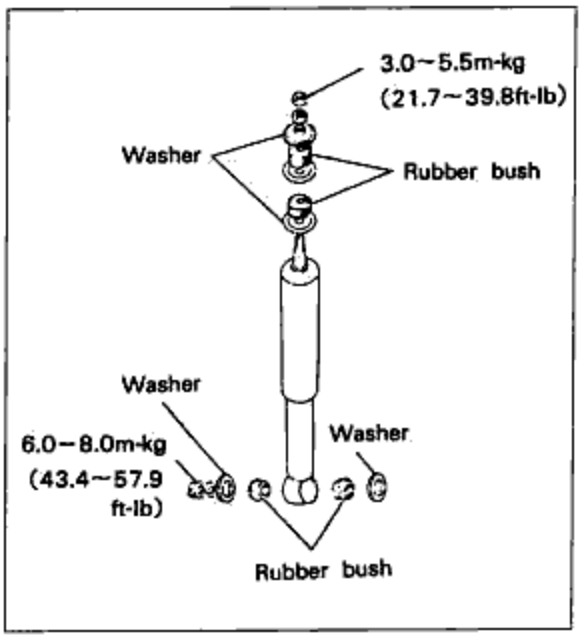

Fig. 13-6

◇ REAR SHOCK ABSORBER

◆ REMOVAL AND INSTALLATION

1. Support the center part of the rear axle and the frame with a jack.
2. Remove the mounting nuts of the upper and lower shock absorber.
3. Remove the washer, rubber bush, and rear shock absorber.
4. Installation is in the reverse order of removal and tighten the mounting nuts to the specified torque.

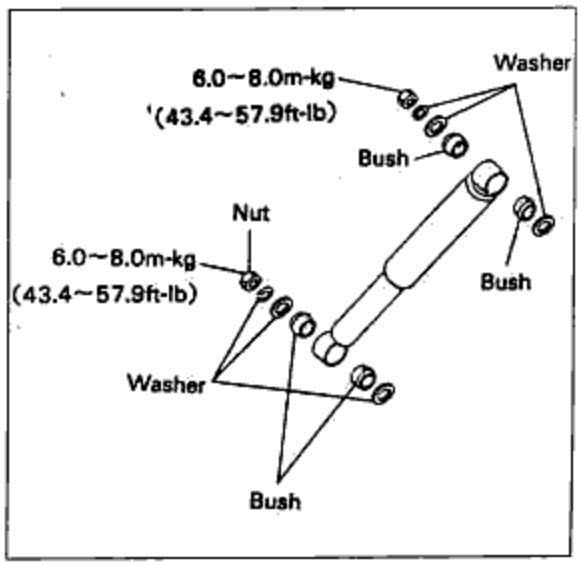

Fig. 13-7

STABILIZER

REMOVAL AND INSTALLATION

1. Remove the support clip of the frame side.
2. Loosen the mounting nuts of the stabilizer and then remove it.
3. Installation is in the reverse order of removal and pay attention to the following points.

CAUTION

- **When installing the stabilizer to the stabilizer rod, the end of cotter pin should be bent correctly left and right after installing.**

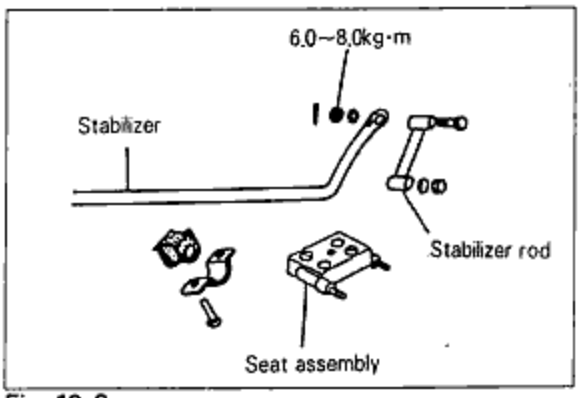

Fig. 13-8

FRONT SPRING

REMOVAL

1. Support the center part of the front axle and the frame with a jack.
2. Remove the wheel and tire.
3. Remove the lower part of the shock absorber.
4. Remove the mounting nuts of the pin assembly and shackle assembly.
5. Remove the nut of U-bolt and the mounting nut of the stabilizer rod.
6. Using a brass bar, remove the spring pin and shackle assembly.
7. Remove the front leaf spring.

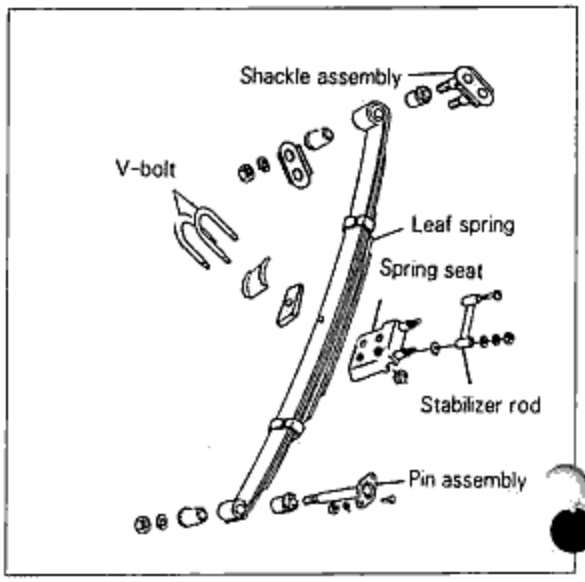

Fig. 13-9

INSTALLATION

Installation is in the reverse order of removal and pay attention to the following points.

1. Apply a grease on the following locations.
   (1) All around surface of pin assembly and shackle assembly.
   (2) All around surface of thrust washer.
   (3) Rubber bushing pin fitted part.
2. Tighten the installed parts to the specified torque.

CAUTION

- **Tighten the shackle pins and pins assembly under no load.**

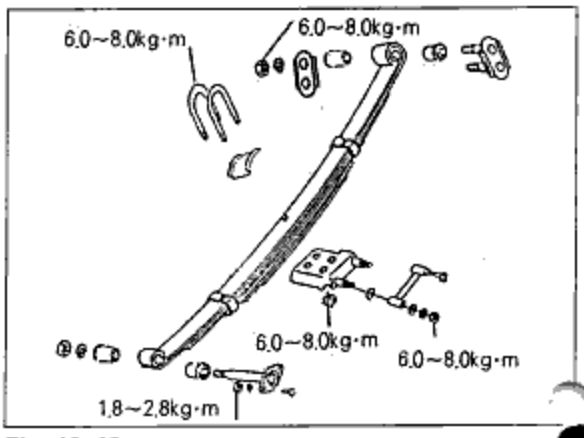

Fig. 13-10

REAR SPRING

REMOVAL

1. Support the center part of the rear axle and the frame of rear side with a jack.
2. Remove the wheel and tire.
3. Remove the lower part of the shock absorber.
4. Remove the mounting nuts of the pin assembly and shackle assembly.
5. Using a brass bar, remove the spring pin and shackle assembly.
6. Remove the nut of U-bolt.
7. Remove the rear spring.

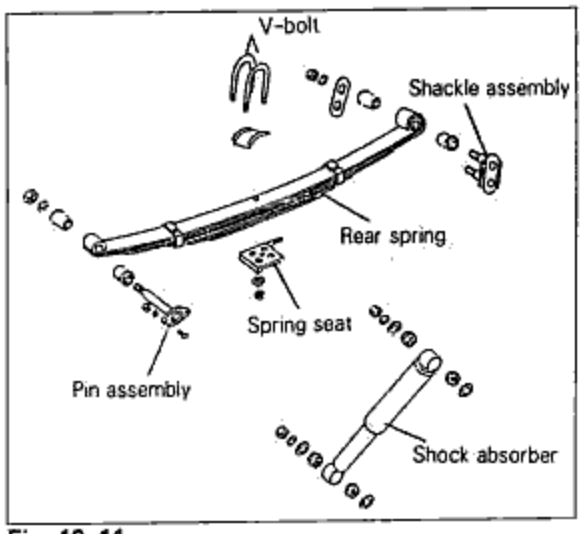

Fig. 13-11

INSTALLATION

Installation is in the reverse order of removal and pay attention to the following points.

1. Apply a grease on the following locations.
   (1) Overall surface of pin assembly and shackle assembly.
   (2) All around surface of thrust washer.
   (3) All around rubber bushing pin fitted part.
2. Tighten the installed parts to the specified torque.

CAUTION

- **Tighten the shackle pins and pins assembly under no load.**

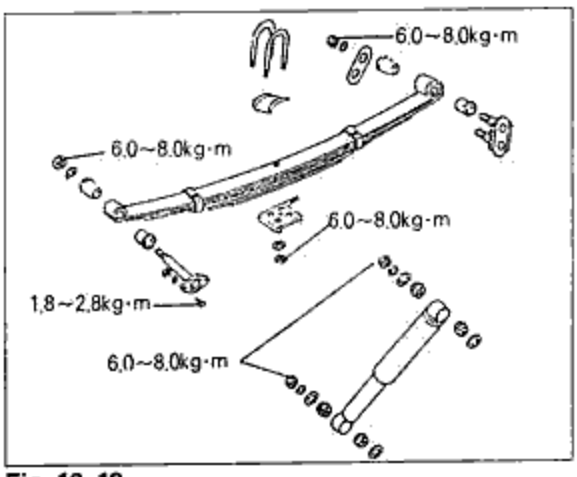

Fig. 13-12

REPLACING RUBBER BUSHING

1. Remove the leaf spring.
2. Remove the rubber bushing on one side with a chisel.
3. Remove the remaining rubber bushing by striking it with a suitable round bar and a hammer.

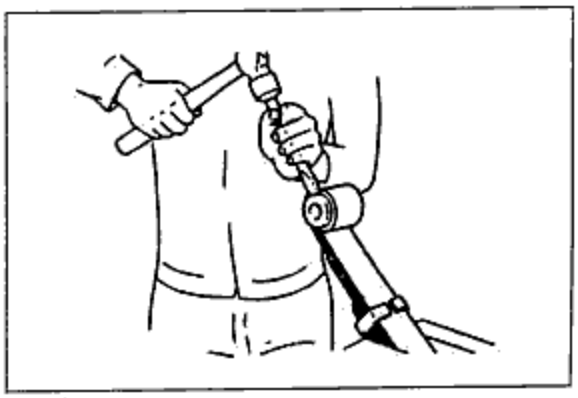
Fig. 13-13

4. Press-fit a new rubber bushing with a suitable round bar.

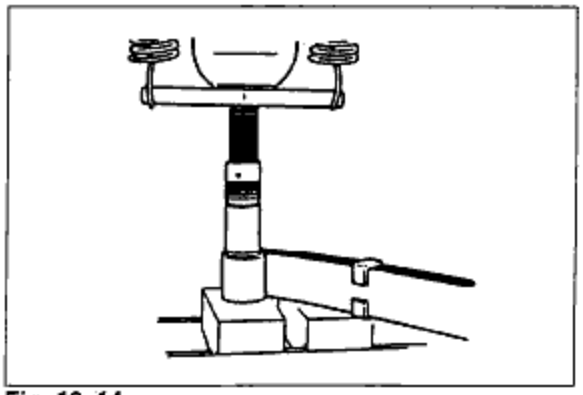

Fig. 13-14

BODY

14

FRONTS BUMPER ..... 14—2
REMOVAL AND INSTALLATION ..... 14—2
REAR BUMPER ..... 14—3
REMOVAL AND INSTALLATION ..... 14—3
FRONT DOOR ..... 14—4
STRUCTURAL VIEW ..... 14—4
DISASSEMBLY AND ASSEMBLY OF FRONT DOOR ..... 14—6
REMOVAL OF DOOR LOCK ASSEMBLY ..... 14—7
REMOVAL OF DOOR ..... 14—7
ADJUSTMENT OF DOOR ..... 14—8
TAIL GATE ..... 14—9
STRUCTURAL VIEW ..... 14—9
WINDSHIELD ..... 14—10
STRUCTURAL VIEW ..... 14—10
WINDOW GLASS ..... 14—11
STRUCTURAL VIEW ..... 14—11
FRONT AND BACK WINDOW GLASS ..... 14—12
QUARTER WINDOW GLASS ..... 14—13
SEAT ..... 14—14
FRONT SEAT ..... 14—14
REAR SEAT ..... 14—15
DRIVER SEAT ..... 14—16
SEAT BELT ..... 14—17
STRUCTURAL VIEW ..... 14—17
SUNVISOR, MIRROR AND GRILLE ..... 14—18
STRUCTURAL VIEW ..... 14—18
RADIATOR GUARD AND HOOD ..... 14—19
STRUCTURAL VIEW ..... 14—19
APPLIQUE ..... 14—20
STRUCTURAL VIEW ..... 14—20

FRONT BUMPER

REMOVAL AND INSTALLATION

Remove in the numbered order shown in the figure and install in the reverse order of removal.

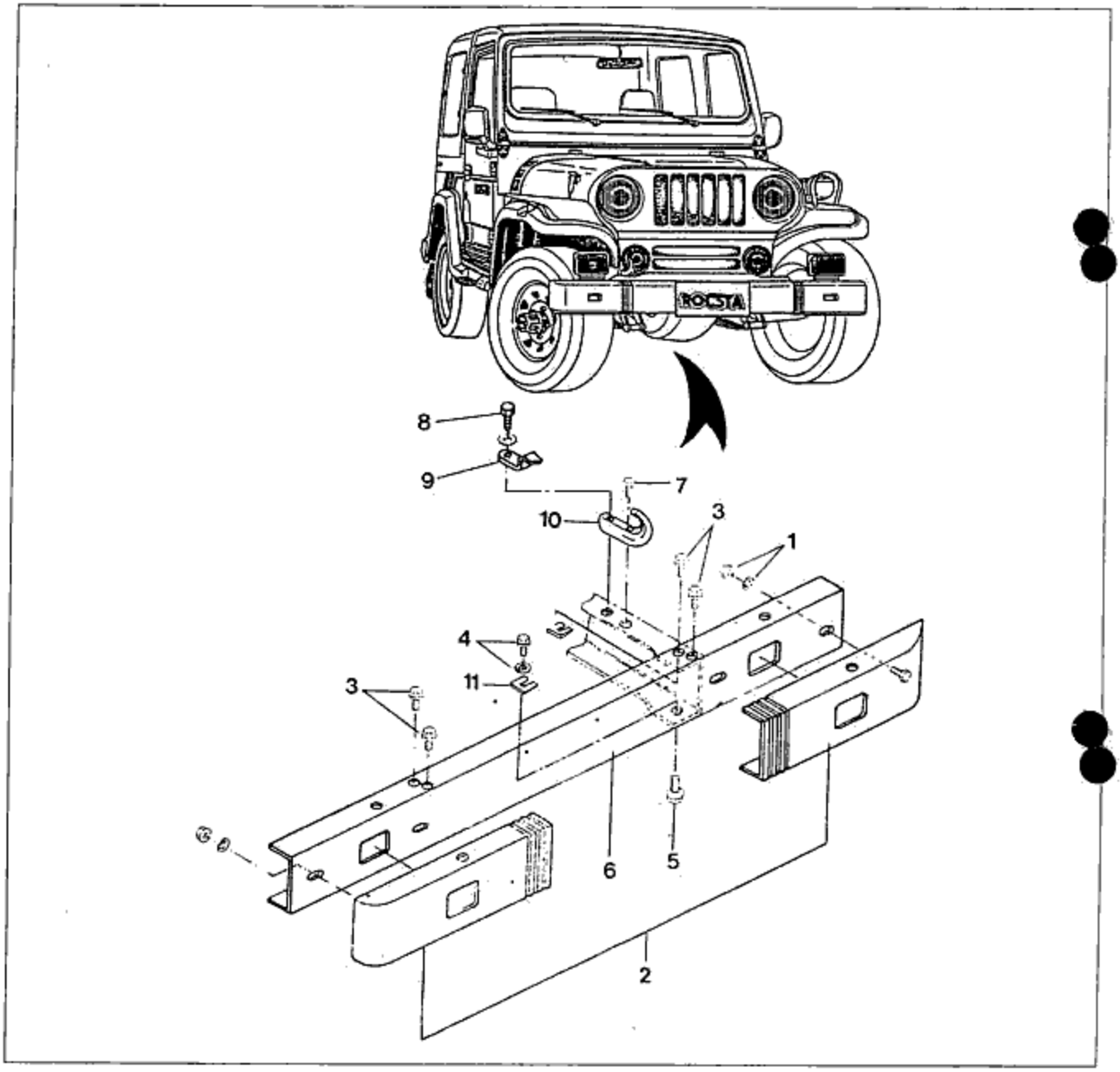

Fig. 14-1

1. Flange nut & washer
2. Side bumper assembly
3. Flange bolt
4. Flange nut & Washer
5. Bolt
6. Center bumper assembly
7. Flange bolt
8. Flange bolt
9. Spring hook
10. Tow hook
11. Spacer

REAR BUMPER

REMOVAL AND INSTALLATION

Remove in the numbered order shown in the figure and install in the reverse order of removal.

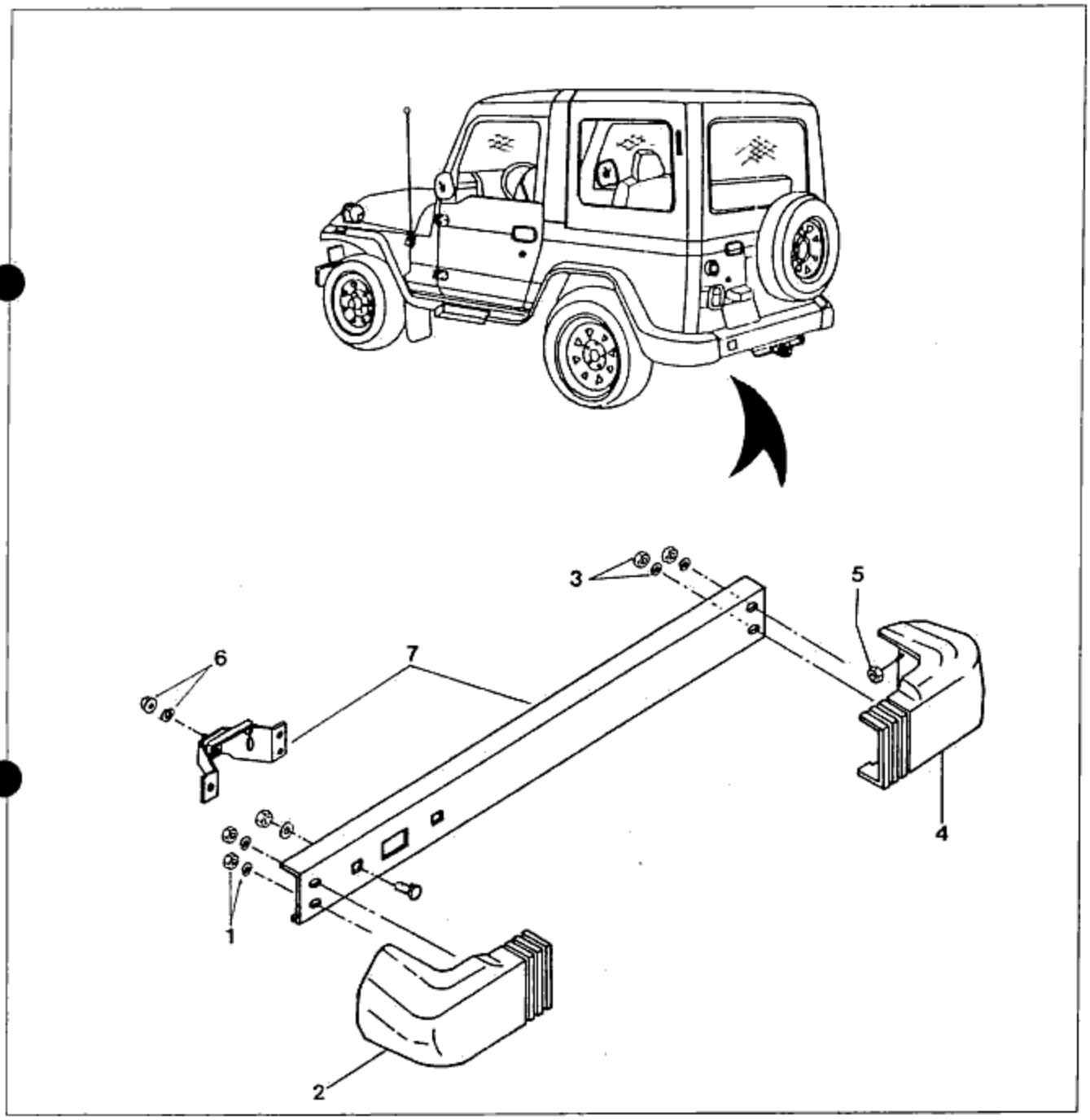

Fig. 14-2

1. Flange nut & washer
2. Side bumper assembly
3. Flange nut & washer
4. Side bumper assembly
5. Speed nut
6. Flnage nut & washer
7. Center bumper assembly & bracket

FRONT DOOR

STRUCTURAL VIEW

Front door

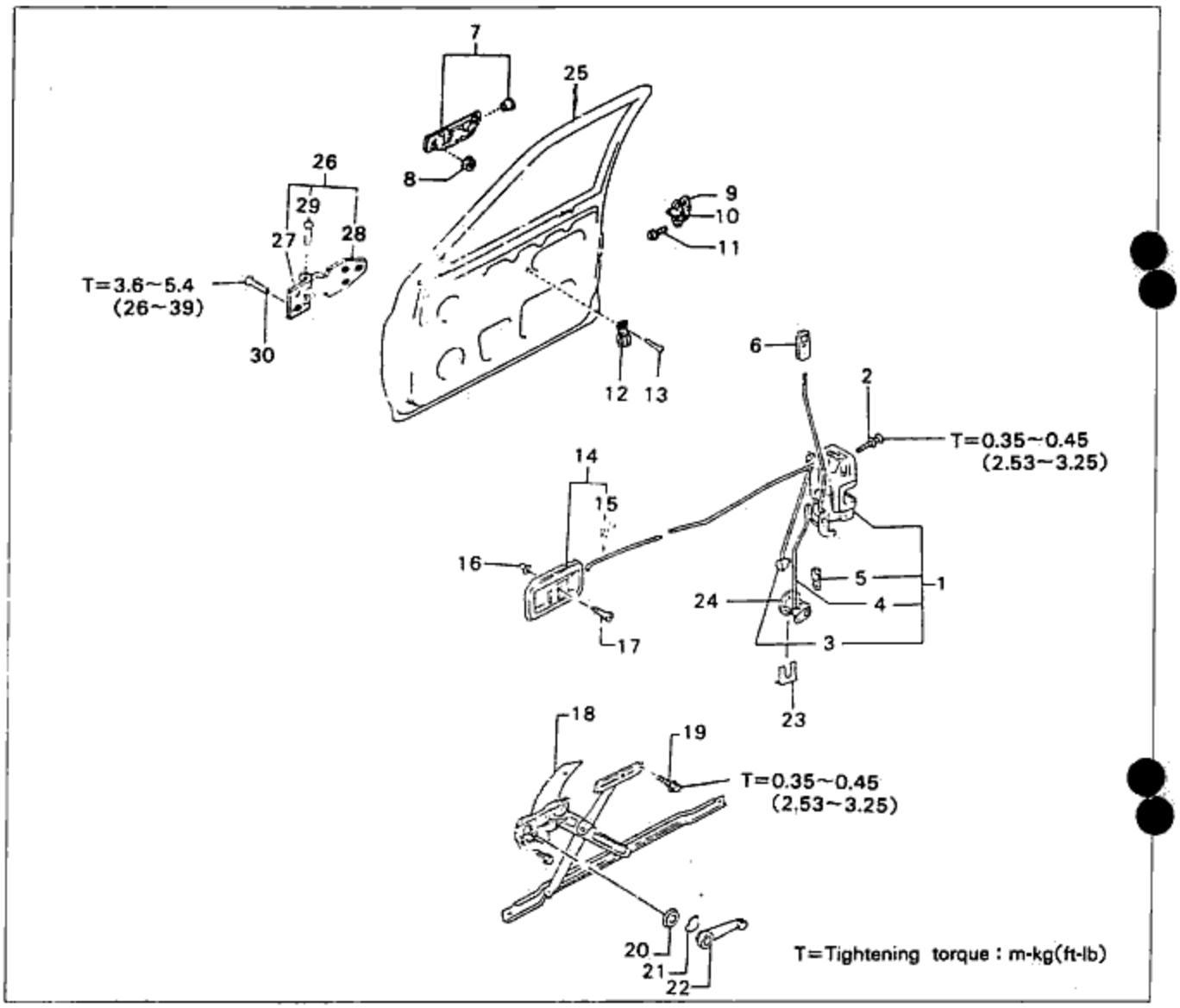

Fig. 14-3

1. Door lock ASS'Y
2. Screw
3. Joint
4. Key cylinder rod
5. Clip
6. Inner lock knob
7. Outer handle ASS'Y
8. Flange nut
9. Door striker shim
10. Door lock striker
11. Screw
12. Holder rod
13. Tapping screw
14. Inner handle ASS'Y
15. Clip
16. Grommet
17. Tapping screw
18. Window regulator
19. Bolt
20. Packing
21. Escutcheon
22. Regulator handle
23. Clamp
24. Lock cylinder
25. Door shell ASS'Y
26. Hinge ASS'Y
27. Body side hinge
28. Door side hinge
29. Hinge pin
30. Socket screw

Front door trim

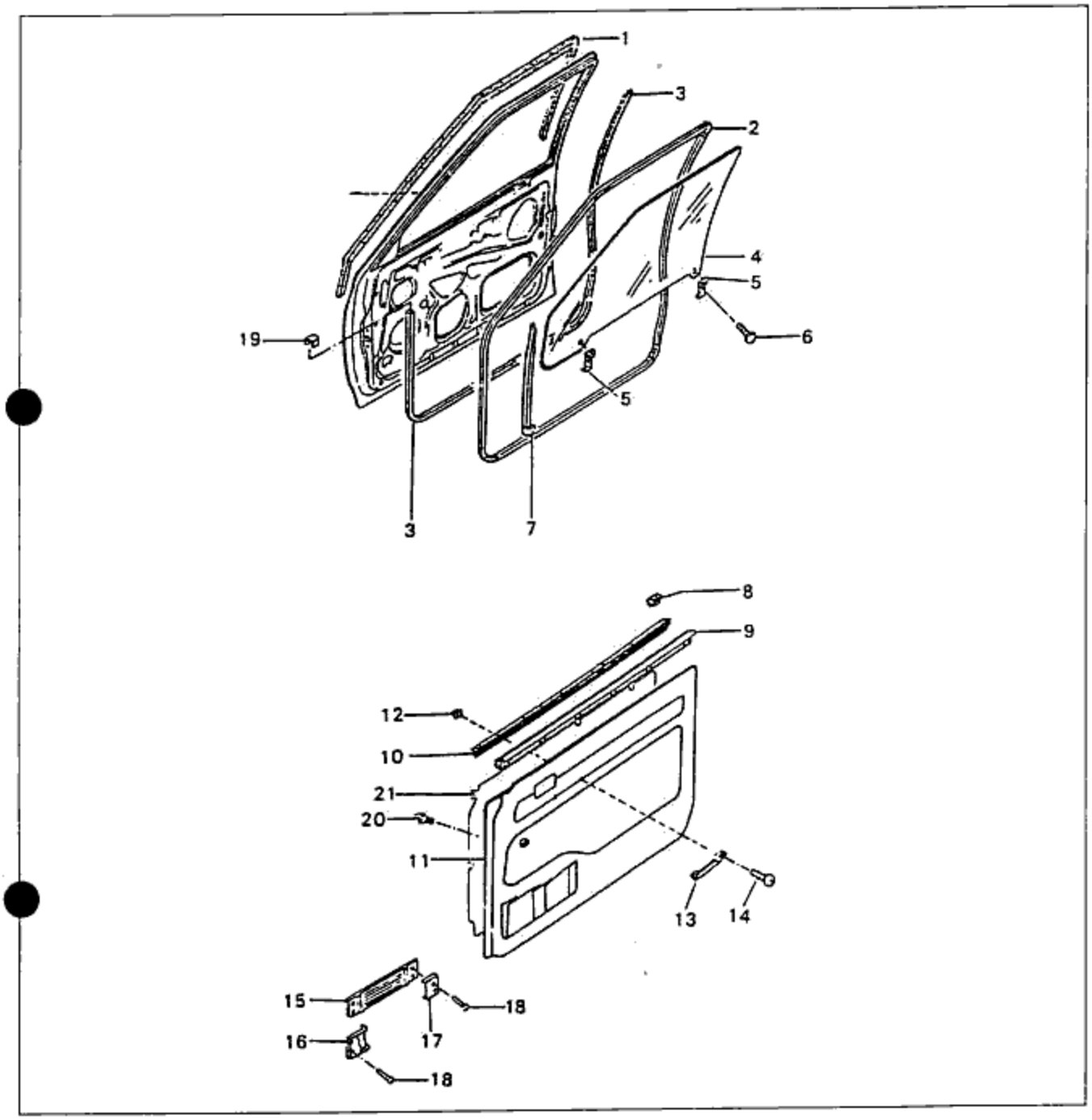

Fig. 14-4

1. Glass run channel
2. Weatherstrip ASS'Y
3. Weatherstrip
4. Glass
5. Screw grommet
6. Screw
7. Door glass guide
8. Lock vessel
9. Glass inner weatherstrip
10. Glass outer weatherstrip
11. Inner panel
12. Screw grommet
13. Full handle
14. Screw
15. Door check strip
16. Bracket
17. Plate
18. Screw
19. Cap
20. Fastener
21. Screen

◈ DISASSEMBLY AND ASSEMBLY OF FRONT DOOR

Describe disassembly and assembly of the driver side door basically.

Removal of regulator handle

(1) Remove the snap ring with a string.
(2) Remove the escutcheon and regulator handle.

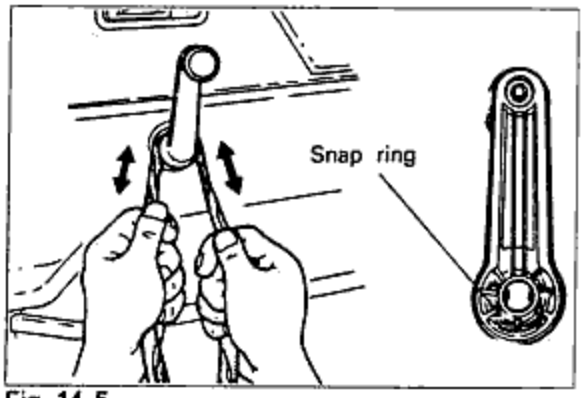

Fig. 14-5

Removal of door trim

(1) Remove the screw as shown in the figure.
(2) Remove the full handle and then remove the inner pannel.

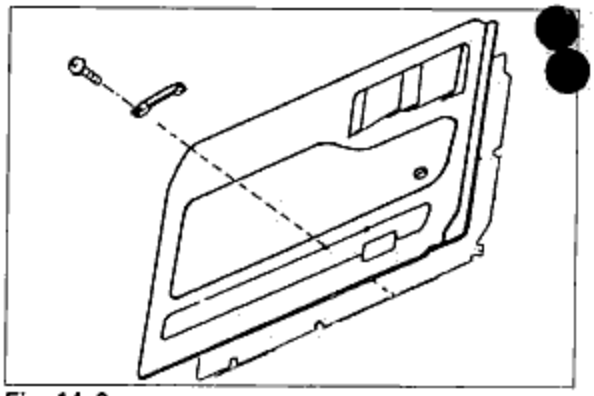
Fig. 14-6

Removal of door inside screen

(1) Remove the screen so as not to damage.

Removal of glass

(1) Remove the glass guide mounting bolts and cross the glass guide vertically.
(2) Remove the glass mounting bolt.
(3) Remove the glass upward.

CAUTION

- **Remove the glass so as not to damage.**

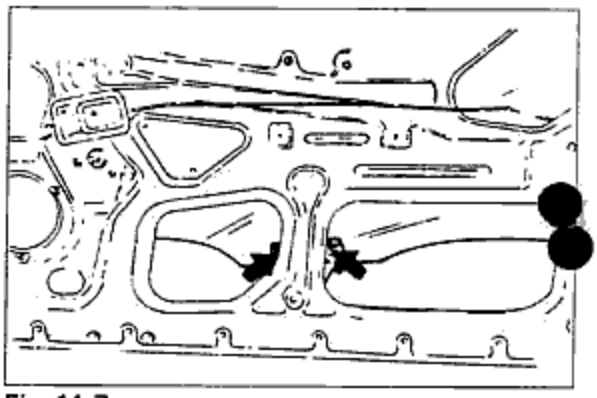
Fig. 14-7

Removal of regulator

(1) Remove the regulator mounting bolt and nut and then remove the regulator.

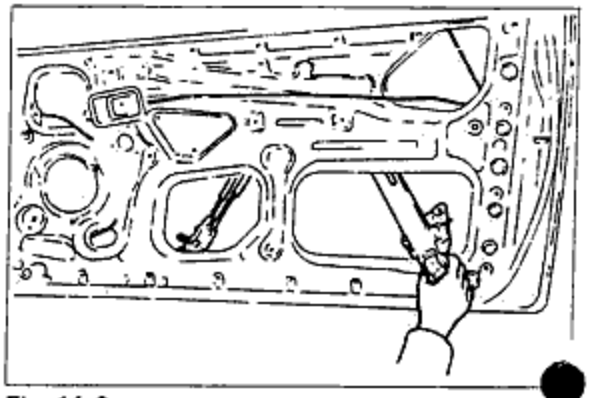
Fig. 14-8

Removal of outer handle

(1) Remove the rod.
(2) Remove the outer handle mounting nut.
(3) And then remove the outer handle.

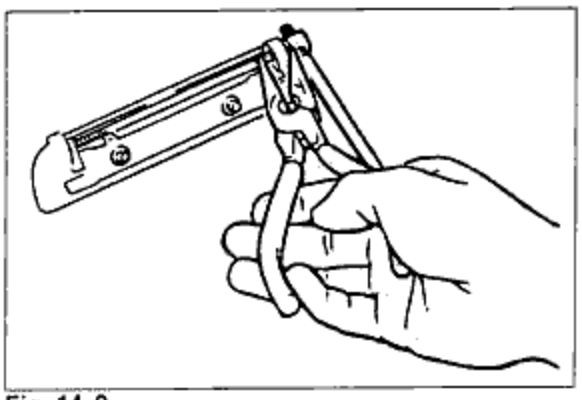

Fig. 14-9

◆ REMOVAL OF DOOR LOCK ASSEMBLY

Removal

(1) Remove the screws.
(2) Remove the door lock assembly.

Assembly

Assemble in the reverse order of removal.

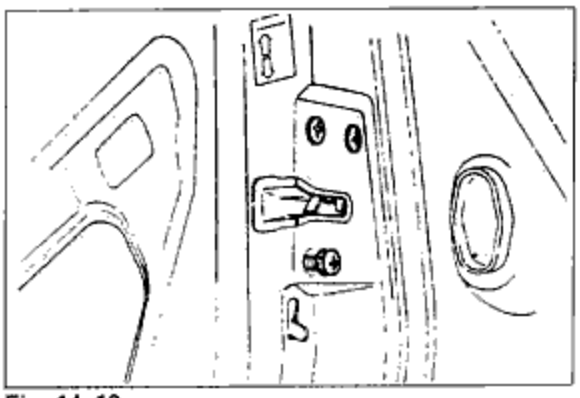

Fig. 14-10

◆ REMOVAL OF DOOR

Removal of hinge pin

(1) Remove the pin to tap upward from under with a hammer.
① Socket screw
② Body side hinge
③ Hinge pin
④ Door side hinge

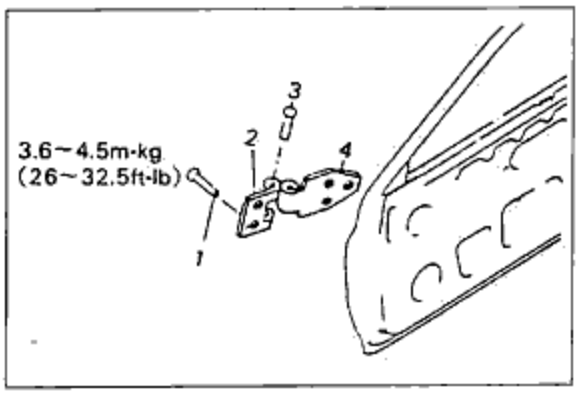

Fig. 14-11

Removal of door

(1) Remove the door hinge mounting bolt.
(2) Remove the door.

Installation

Install in the reverse order of removal.

Door hinge bolt tightening torque:

3.6~5.4kg·m(26~39ft·lb)

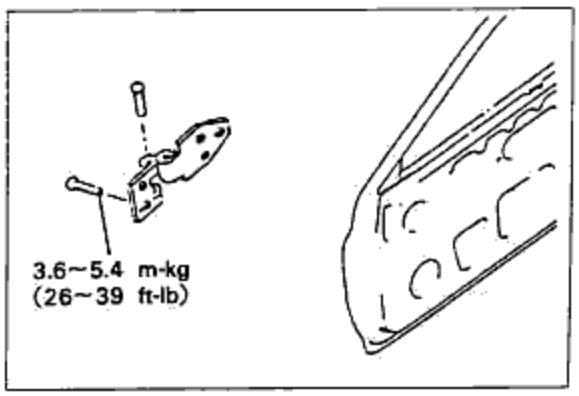

Fig. 14-12

◆ ADJUSTMENT OF DOOR

Door lock striker

1. Check whether the door can be closed easily and whether there is any play. If there is a problem, loosen the striker installation screw and adjust by moving the striker up and down and side to side.
2. Check the rear offset of the door to the body. If there is any problem, adjust by moving the door lock striker side to side.

Tightening torque: 0.8~1.2kg·m(5.8~8.7ft·lb)

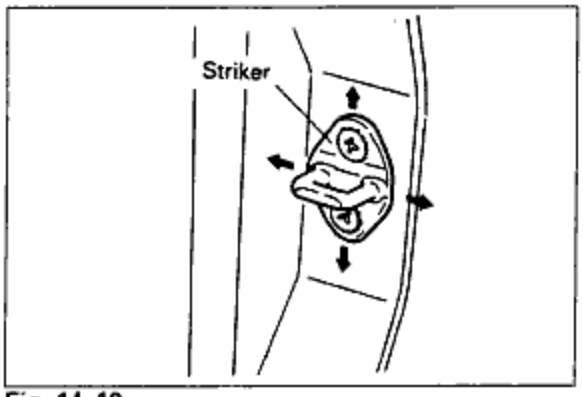

Fig. 14-13

Door hinges

1. Open the door. If there is play in the hinges, tighten the door hinge installation bolts.
2. To adjust the door-to-body offset, loosen the door hinge installation bolt and make the adjustment.

TAIL GATE

STRUCTURAL VIEW

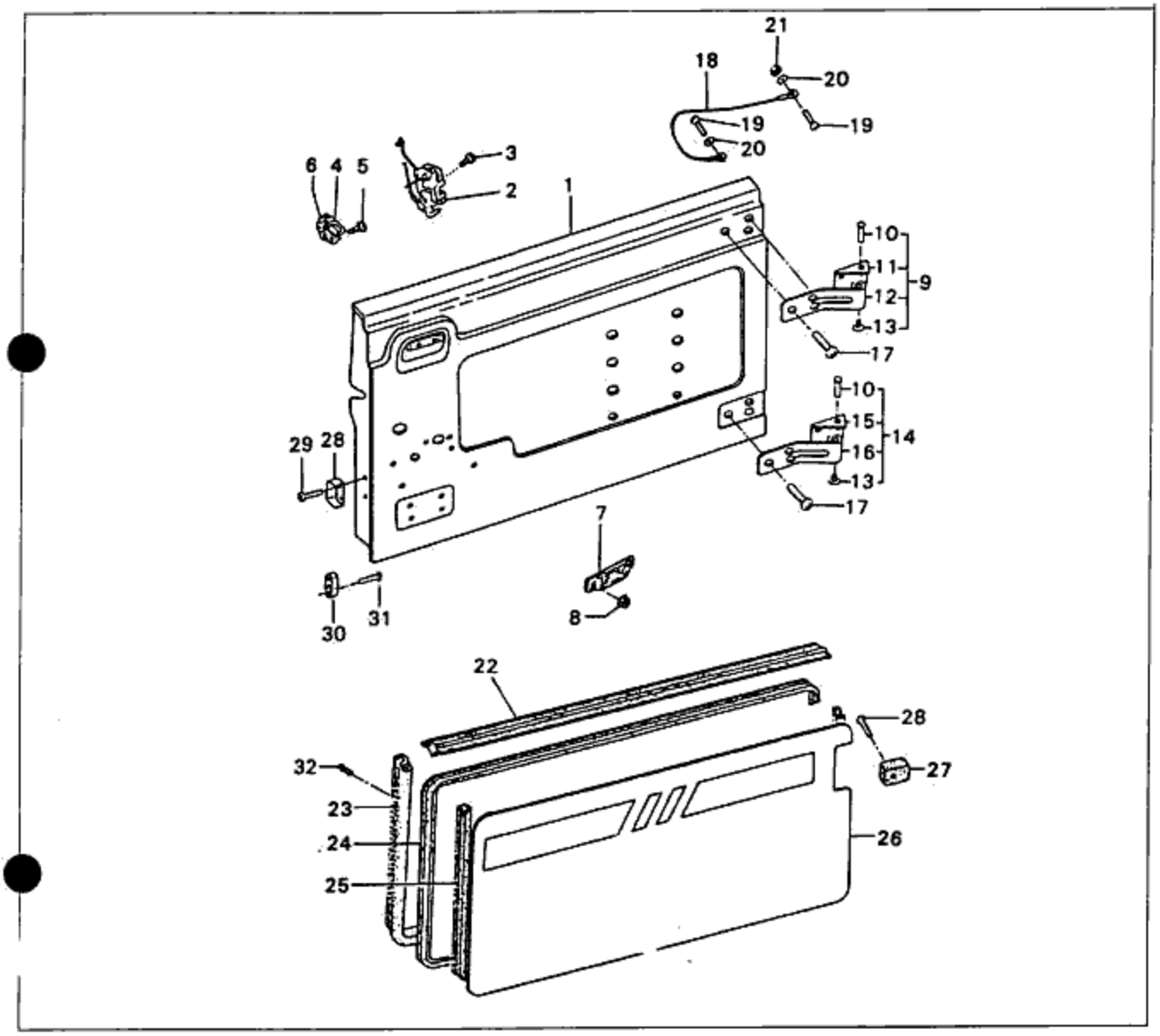

Fig. 14-14

1. Tail gate ASS'Y
2. Lock ASS'Y
3. Screw
4. Striker
5. Screw
6. Striker shim
7. Handle ASS'Y
8. Flange nut
9. Hinge ASS'Y (upper)
10. Hinge pin
11. Hinge
12. Hinge
13. Bush
14. Hinge ASS'Y (lower)
15. Hinge
16. Hinge
17. Socket screw
18. Support cable
19. Screw
20. Plain washer
21. Nut
22. Weatherstrip
23. Weatherstrip
24. Weatherstrip
25. Weatherstrip
26. Inner panel
27. Stopper
28. Screw
29. Dovetail
30. Wedge
31. Screw
32. Fastener

WINDSHIELD

STRUCTURAL VIEW

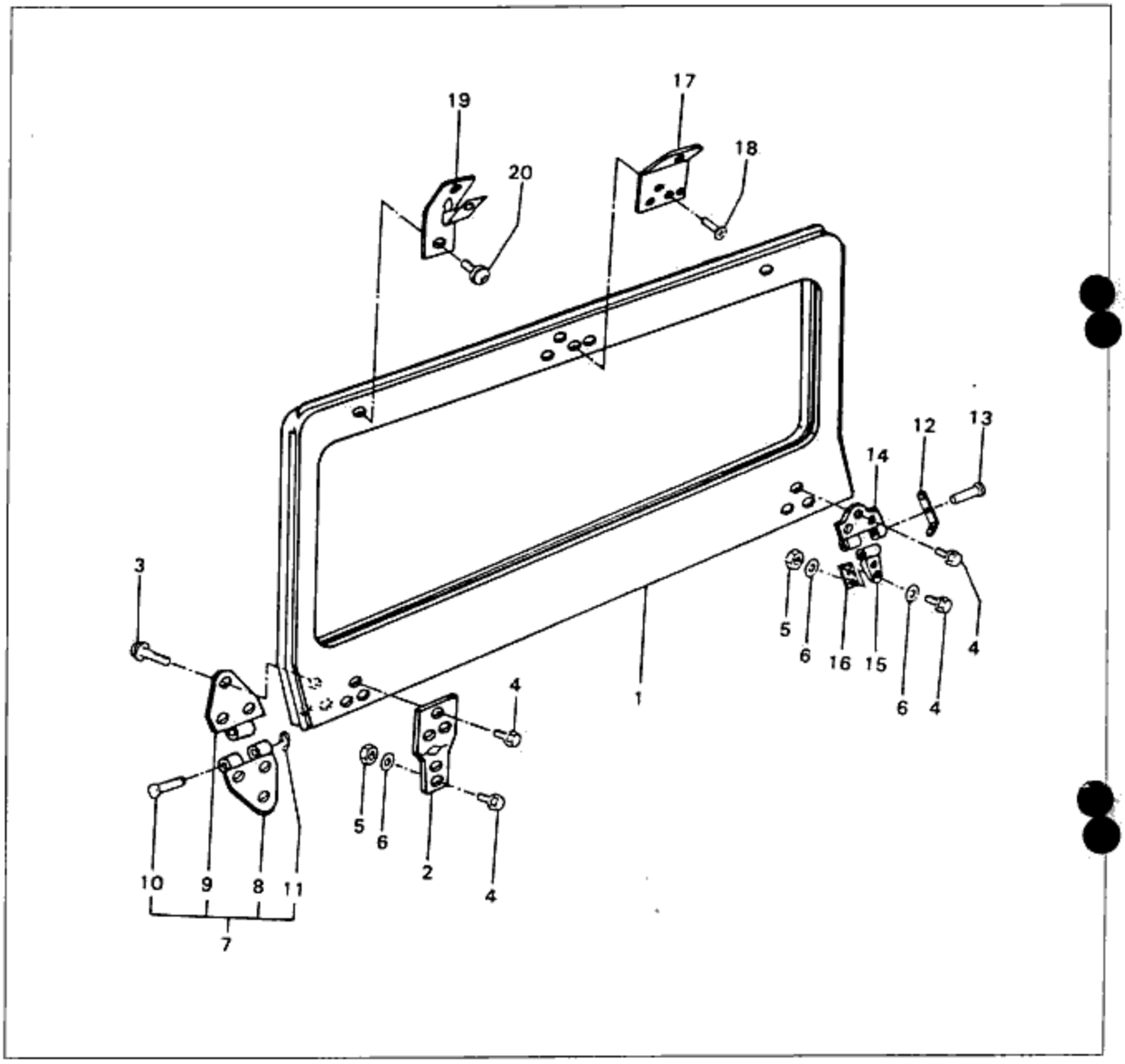

Fig. 14-15

1. Windshield welding ASS'Y
2. Bracket
3. Screw
4. Screw
5. Nut
6. Washer
7. Hinge ASS'Y
8. Hinge
9. Hinge
10. Hinge pin
11. Retaining ring
12. Bracket ASS'Y
13. Pin
14. Bracket
15. Bracket
16. Shim
17. Center bracket
18. Screw
19. Bracket ASS'Y
20. Screw

WINDOW GLASS

STRUCTURAL VIEW

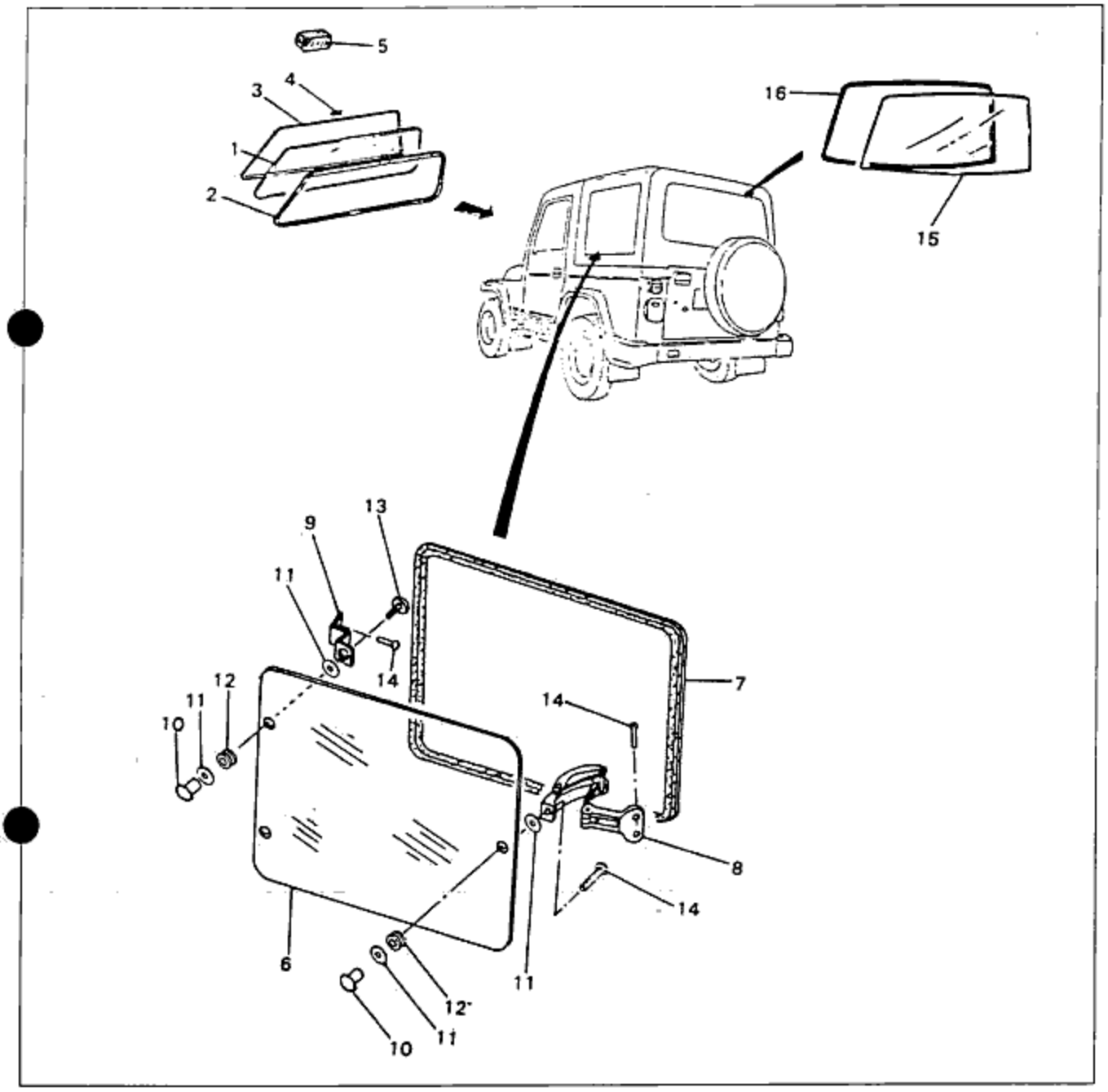

Fig. 14-16

1. Front windshield glass
2. Front windshield weatherstrip
3. Front windshield moulding
4. Joint
5. Front windshield stopper
6. Quarter windglass
7. Quarter wind weatherstrip
8. Lock ASS'Y
9. Bracket
10. Clamp nut
11. Washer
12. Packing
13. Set washer cap
14. Screw
15. Back windglass
16. Back weatherstrip

◈ FRONT AND BACK WINDOW GLASS

Removal

1. Disconnect the printed-heater wiring(back window glass).
2. Using a putty spatula from inside the vehicle, lift the weatherstrip toward the interior, and remove the glass with the weatherstrip attached.
3. Remove the molding.

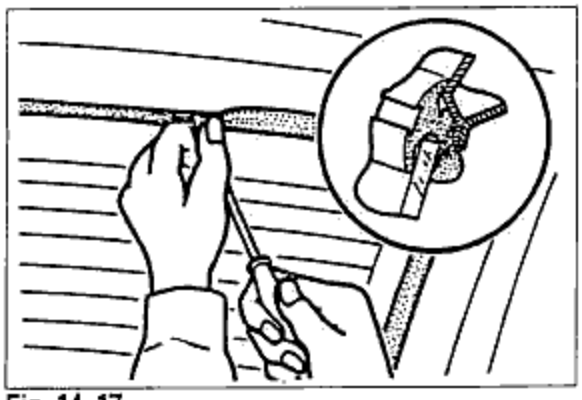

Fig. 14-17

Installation

1. Remove any filler remaining on the body surface.
2. Attach the weatherstrip to the glass.

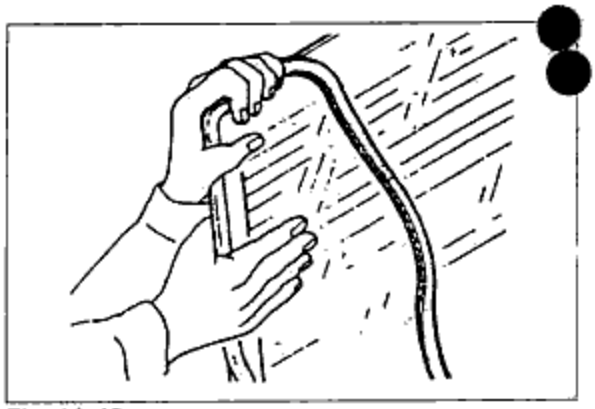

Fig. 14-18

3. Fit string into the weatherstrip, and overlap it for about 50mm(2.0in) at the bottom center.
4. Coat the weatherstrip with soapy water so that the weatherstrip will slip easily on the body surface.
5. Align the glass and weatherstrip correctly to body.

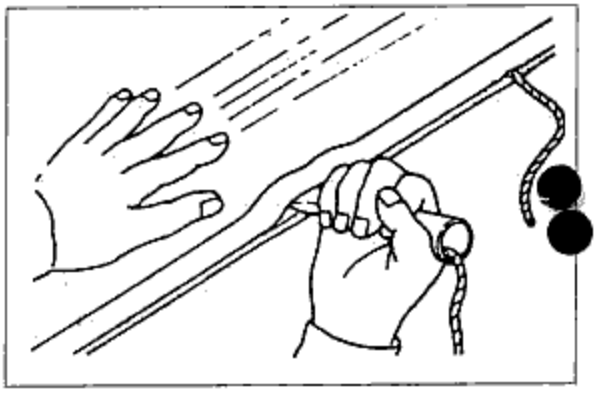

Fig. 14-19

6. While gently tapping around the weatherstrip at the outer side of the glass, pull one end of the string and fit the glass to the body all around.
7. Tap the glass from inside and outside with the palm of your hand, striking the same place from inside and out simultaneously, in order to seat the glass in place.
8. Install the molding.

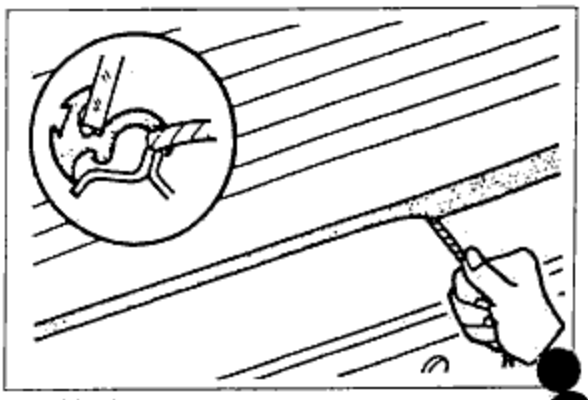

Fig. 14-20

8. Fill the places shown in the figure with filler(TP-33m) between the body(and glass) and the weatherstrip.

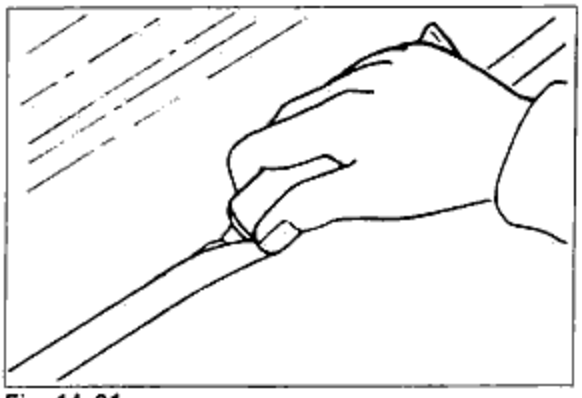

Fig. 14-21

◆ QUARTER WINDOW GLASS

Structural view

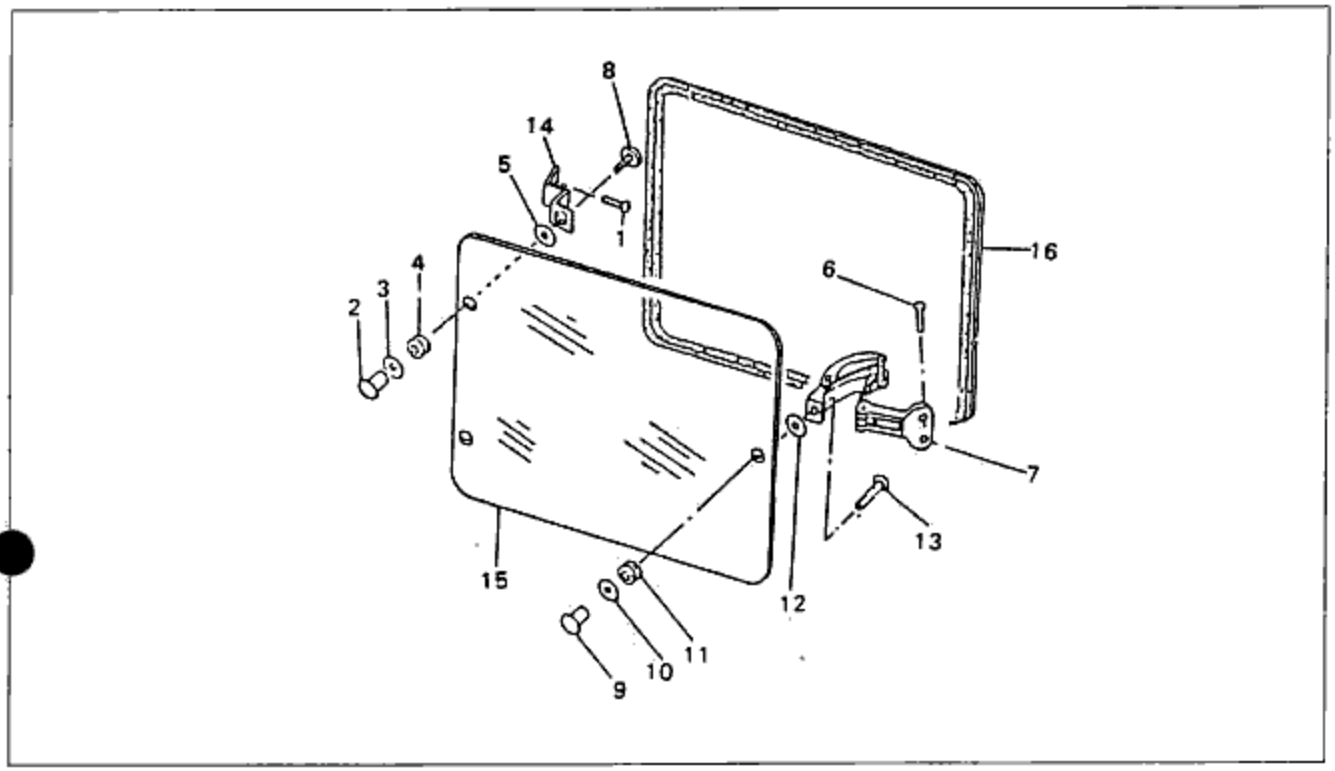

Fig. 14-22

1. Screw
2. Clamp nut
3. Washer
4. Packing
5. Washer
6. Screw
7. Lock ASS'Y
8. Set washer cap
9. Clamp nut
10. Washer
11. Packing
12. Washer
13. Screw
14. Bracket
15. Quarter window glass
16. Quarter window weatehr strip

Removal and installation

Remove in the numbered order shown in the figure and installation is in the reverse order of removal.

SEAT

FRONT SEAT

Structural view

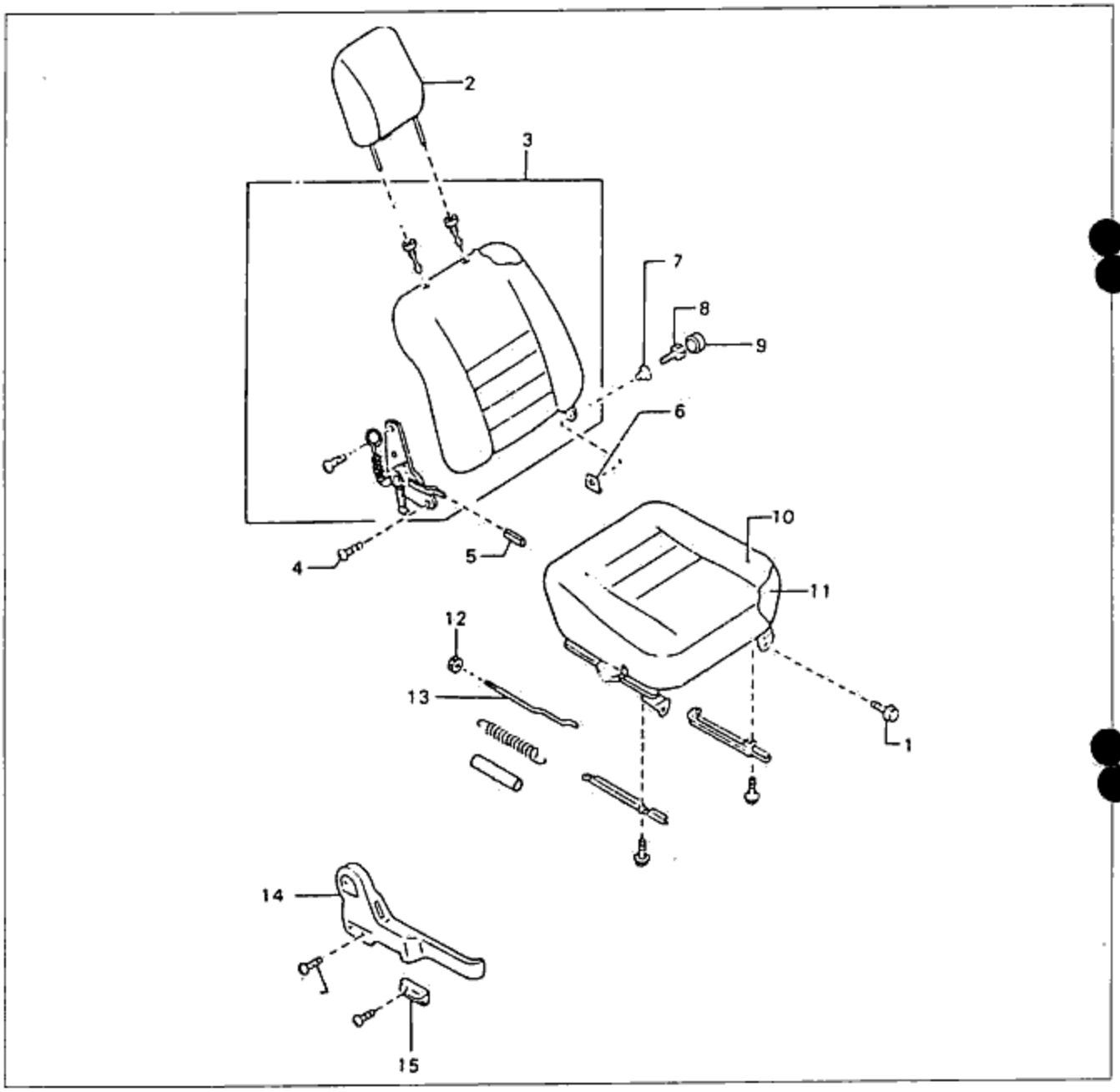

Fig. 14-23

1. Bolt
2. Head rest ASS'Y
3. Back seat
4. Knuckle screw
5. Knob
6. Washer
7. Link bush
8. Link bolt
9. Cap
10. Top cover
11. Seat cushion
12. Nut
13. Shaft
14. Side cover
15. Lock cover

◆ REAR SEAT

Structural view

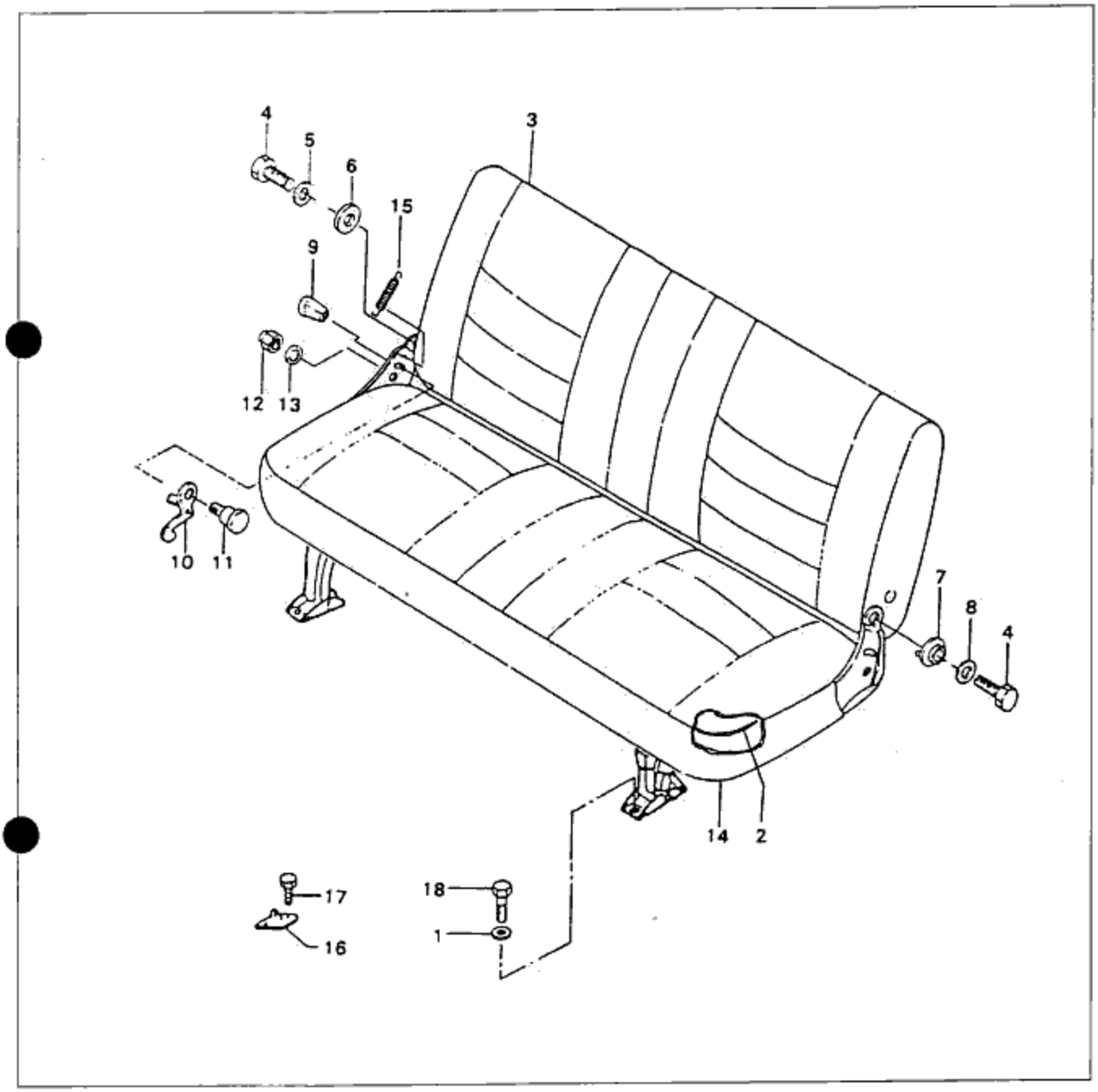

Fig. 14-24

1. Washer
2. Rear seat cushion
3. Rear back seat
4. Bolt
5. Hinge washer
6. Hinge bush
7. Hinge bush
8. Conical washer
9. Knob
10. Lock hook
11. Hinge bolt
12. Cap nut
13. Spring washer
14. Top cover
15. Spring
16. Seat lock bracket
17. Screw
18. Bolt

◆ DRIVER SEAT

Structural view

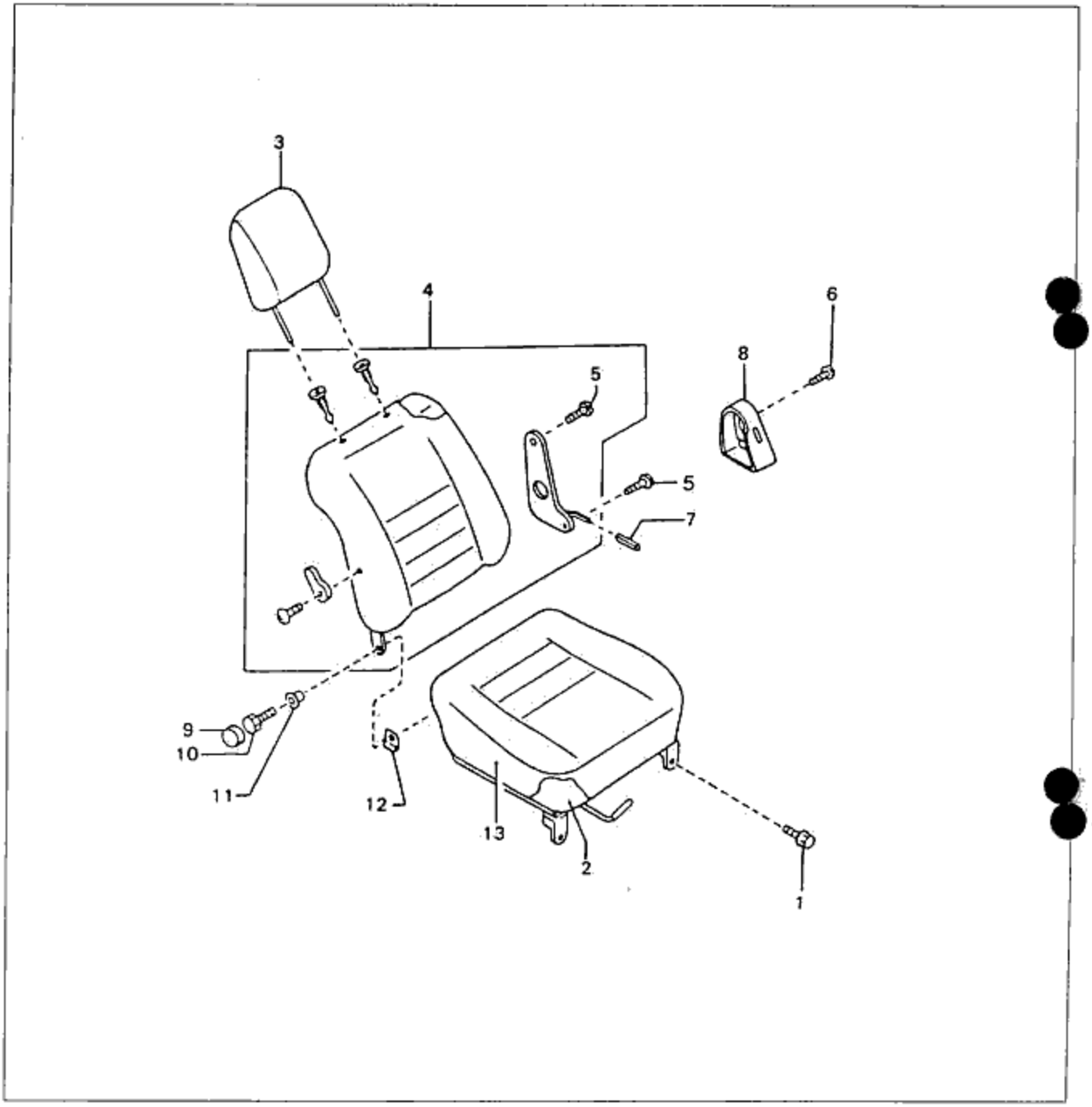

Fig. 14-25

1. Bolt
2. Seat cushion
3. Head rest
4. Back seat
5. Knuckle screw
6. Screw
7. Knob
8. Knuckle cover
9. Cap
10. Link bolt
11. Link bush
12. Washer
13. Top cover

SEAT BELT

STRUCTURAL VIEW

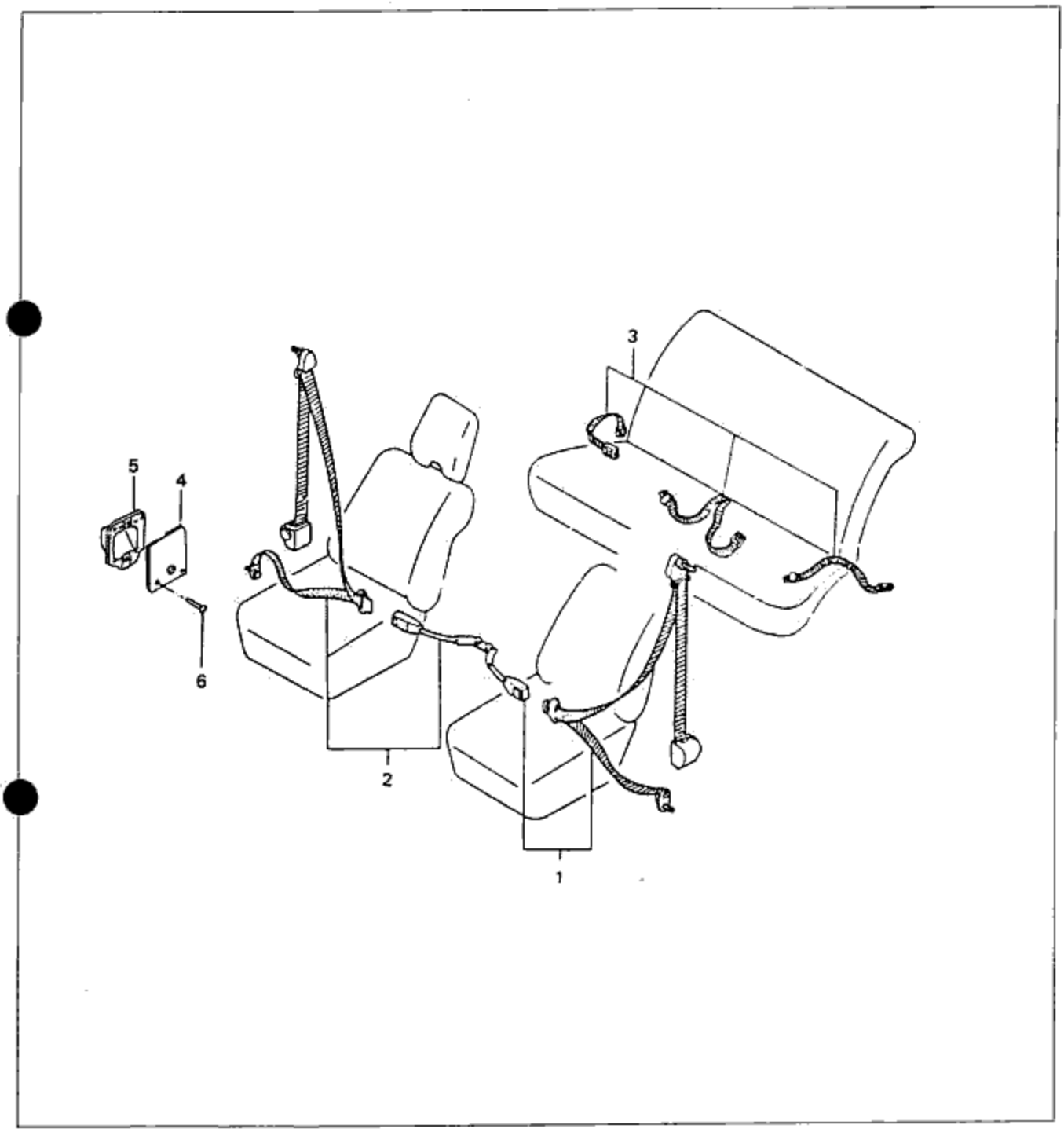

Fig. 14-26

1. Front belt(LH)
2. Front belt(RH)
3. Rear belt
4. Cover
5. Retractor screen
6. Tapping screw

SUNVISOR, MIRROR AND GRILLE

STRUCTURAL VIEW

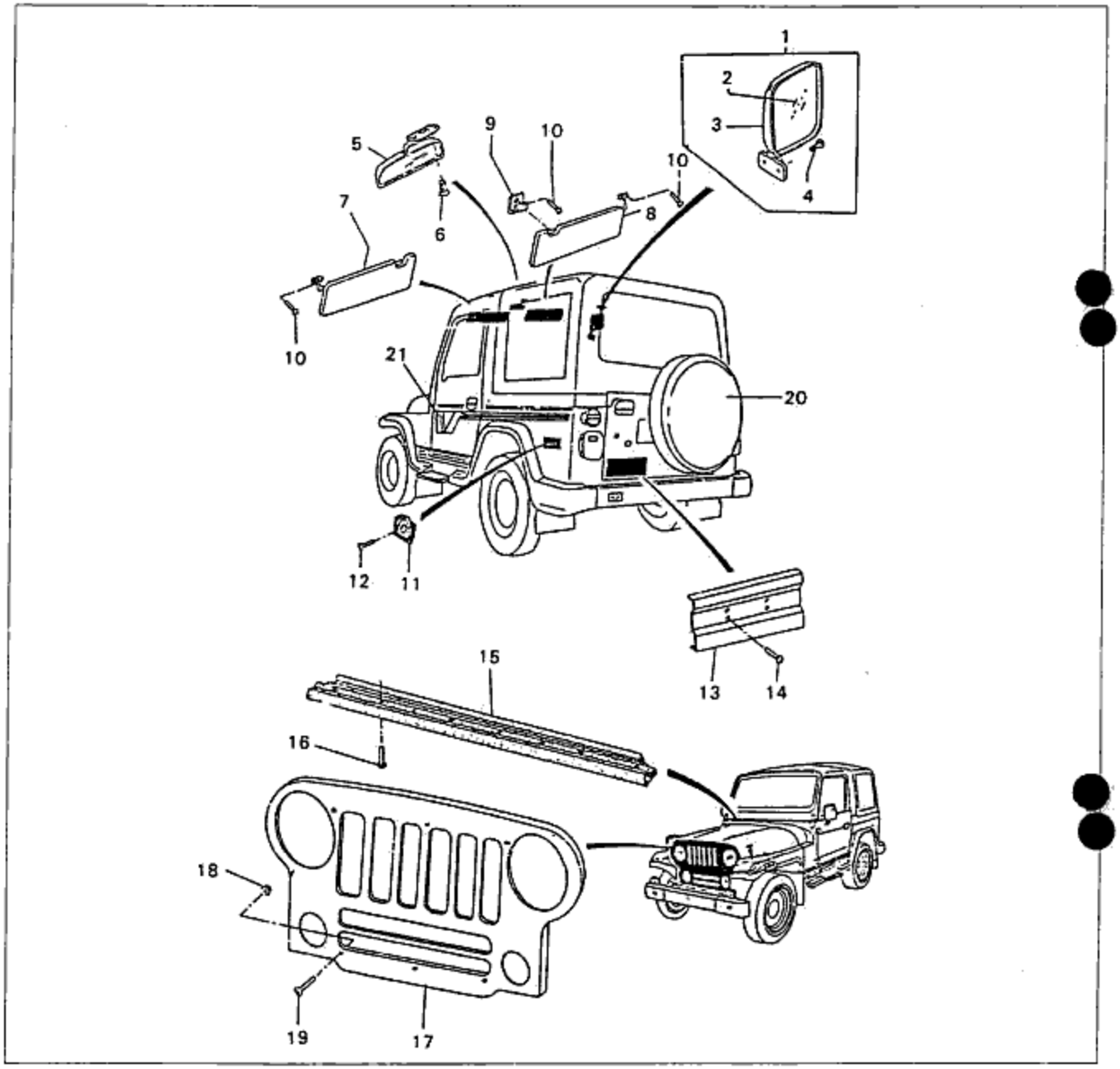

Fig. 14-27

1. Back mirror ASS'Y
2. Mirror
3. Housing
4. Screw
5. Inner mirror ASS'Y
6. Screw
7. Sunvisor ASS'Y(LH)
8. Sunvisor ASS'Y(RH)
9. Adapter
10. Screw
11. Cover
12. Screw
13. Number plate
14. Screw
15. Weatherstrip
16. Screw
17. Grille
18. U-nut
19. Screw
20. Spare tire
21. Decoration tape

⊠ RADIATOR GUARD AND HOOD

◈ STRUCTURAL VIEW

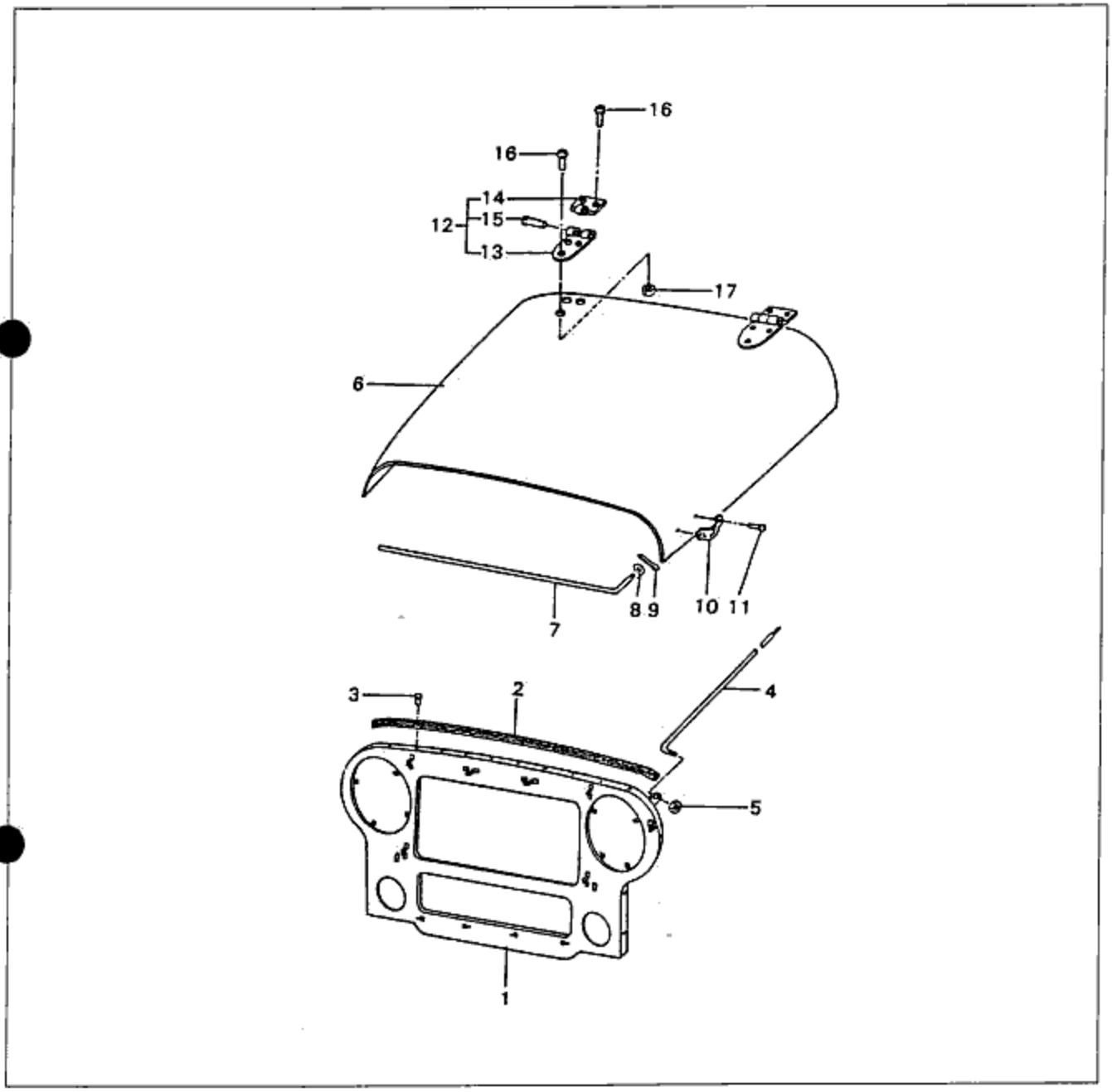

Fig. 14-28

1. Radiator guard ASS'Y
2. Weatherstrip
3. Rivet
4. Rod
5. Flange nut
6. Hood panel ASS'Y
7. Rod
8. Washer
9. Split pin
10. Fastener bracket
11. Screw
12. Hinge ASS'Y
13. Hinge
14. Hinge
15. Hinge pin
16. Socket screw
17. Nut

APPLIQUE

STRUCTURAL VIEW

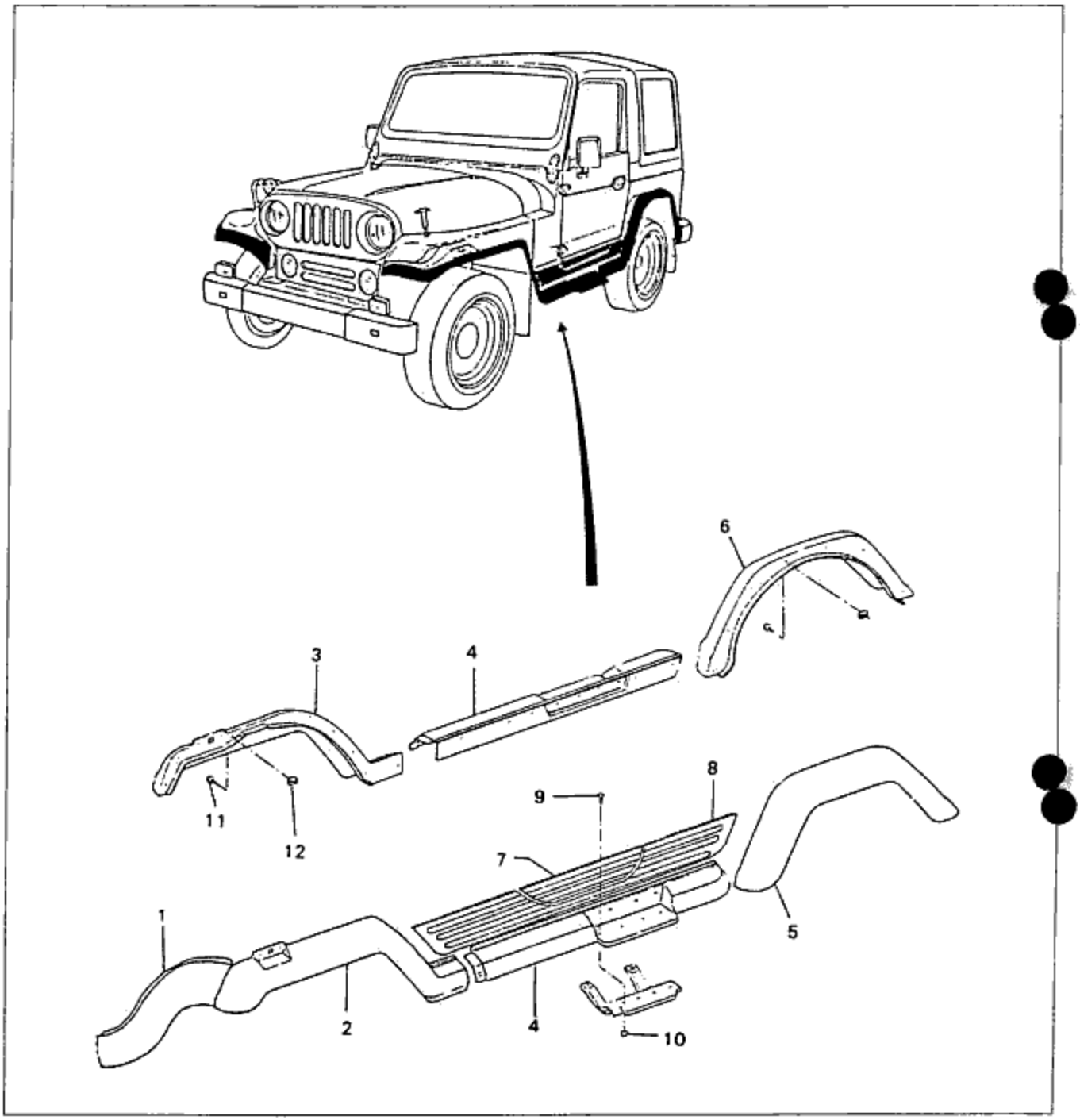

Fig. 14-29

1. Front applique
2. Front fender applique(LH)
3. Front fender applique(RH)
4. Side applique
5. Rear fender applique(LH)
6. Rear fender applique(RH)
7. Door moulding
8. Moulding
9. Bolt
10. Nut
11. Screw
12. U-nut

BODY ELECTRICAL SYSTEM 15

- ELECTRICAL TROUBLESHOOTING TOOLS ..... 15—2
- PRECAUTIONS ..... 15—3
- ELECTRICAL SYMBOLS ..... 15—5
- FUSIBLE LINK AND FUSE BOX ..... 15—6
  - IGNITION KEY SWITCH ..... 15—8
  - COMBINATIONS SWITCH ..... 15—8
  - FOG LAMP SWITCH ..... 15—10
  - REAR DEFOGER SWITCH ..... 15—10
- METER AND SENSOR UNIT ..... 15—11
  - STRUCTURAL VIEW ..... 15—11
  - TROUBLESHOOTING GUIDE ..... 15—11
  - ON-VEHICLE INSPECTION ..... 15—12
- WINDSHIELD WIPERS ..... 15—14
  - REMOVAL AND INSTALLATION ..... 15—14
  - INSPECTION ..... 15—15
  - ADJUSTMENT ..... 15—16
- HEATER ..... 15—17
  - STRUCTURAL VIEW ..... 15—17
- FRONT LAMP ..... 15—18
  - STRUCTURAL VIEW ..... 15—18
- REAR LAMP ..... 15—19
  - STRUCTURAL VIEW ..... 15—19
- AUDIO SYSTEM ..... 15—20
  - STRUCTURAL VIEW ..... 15—20

ELECTRICAL TROUBLESHOOTING TOOLS

Test light

The test light, as shown in the figure, uses a 12-V bulb. The two lead wires should be connected to probes.
The test light is used for simple voltage checks and to check for short circuits.

CAUTION

- **When checking the control unit, never use over a 3.4W bulb.**

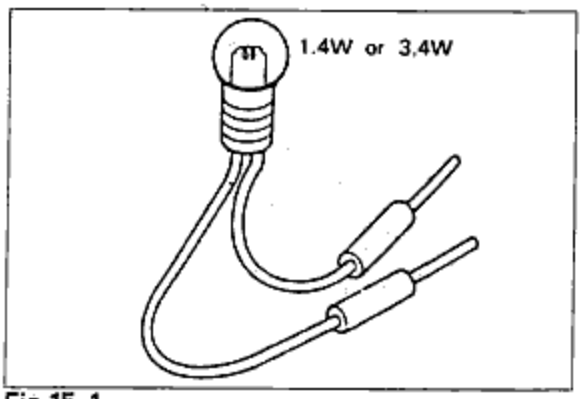

Fig 15-1

Jump wire

The jump wire is used for testing by short-circuiting switch terminals and to verify the condition of ground connections.

CAUTION

- **Do not connect the jump wire between the power source line and the body ground, beause doing so may cause burning or other damage of harnesses.**

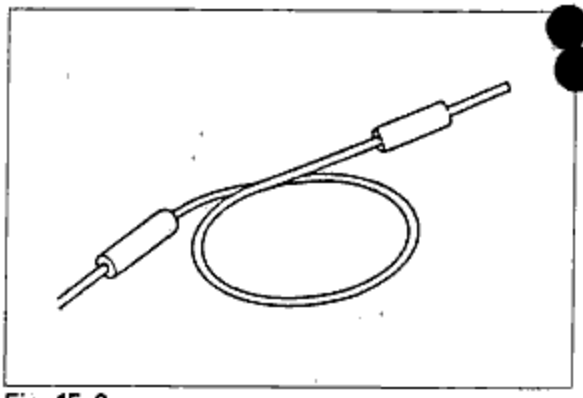
Fig. 15-2

Voltmeter

The DC voltmeter is used for measurement of circuit voltage. A voltmeter with a range of 15V or more is used. It is used by connecting the positive(+) probe (the red lead wire) to the point where voltage is to be measured and connecting the negative(−) probe(the black lead wire) to the body ground.

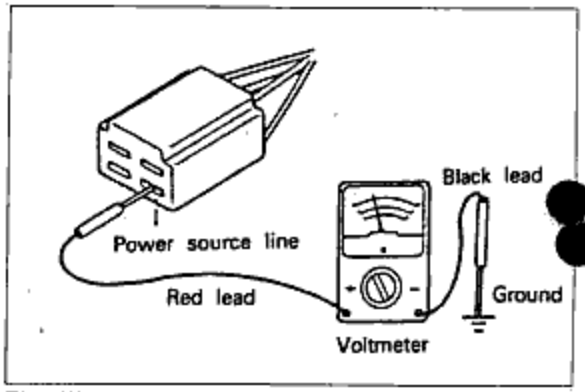

Fig. 15-3

Ohmmeter

The ohmmeter is used to measure the resistance between two points in a circuit, and is also used to check for continuity and diagnosis of short circuits.

CAUTION

- **Do not attempt to connect the ohmmeter to any circuit to which voltage is applied, because doing so may burn or otherwise damage the ohmmeter.**

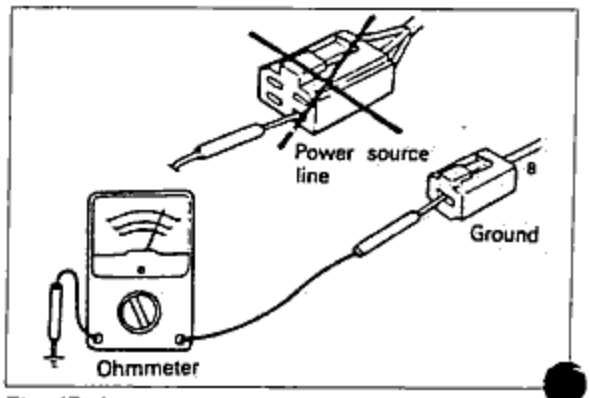

Fig. 15-4

⊠ PRECAUTIONS

Wiring color codes

Two-color wires are indicated by a two-letter symbol. The first letter indicates the base color of the wire and the second indicates the color of the stripe.

Code	Color
B	Black
Br	Brown
G	Green
L	Blue
Lb	Light blue
Lg	Light green
O	Orange
R	Red
Y	Yellow
W	White

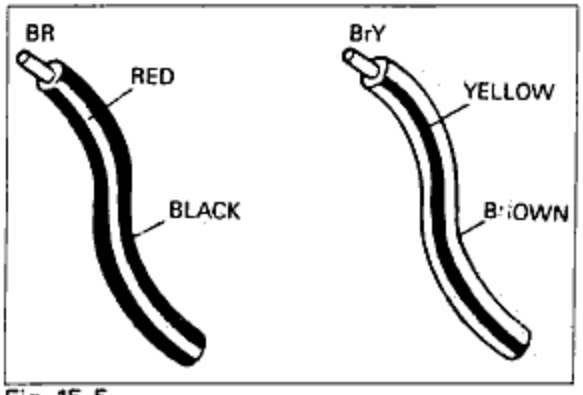

Fig. 15-5

Handling of bulkhead-type connectors removal of the connector

The connector can be removed by pressing the lock lever.
Do not pull the wire when removing the connector, be careful to hold the connector itself when disconnecting.

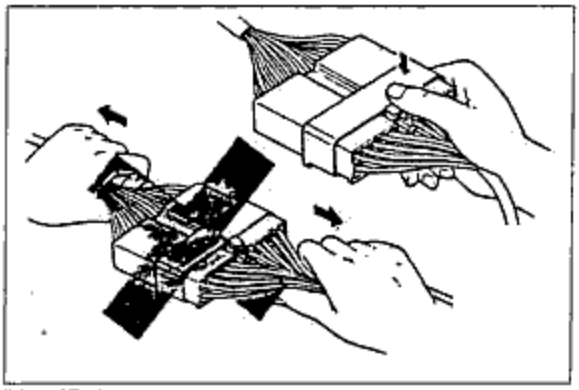
Fig. 15-6

Inspection notes

When checking the continuity or voltage with a circuit tester, insertion of the test probe into the receptacle connector may open the fitting to the connector and result in poor contact.
Therefore, ensure that the test probe is inserted from the wire harness side.

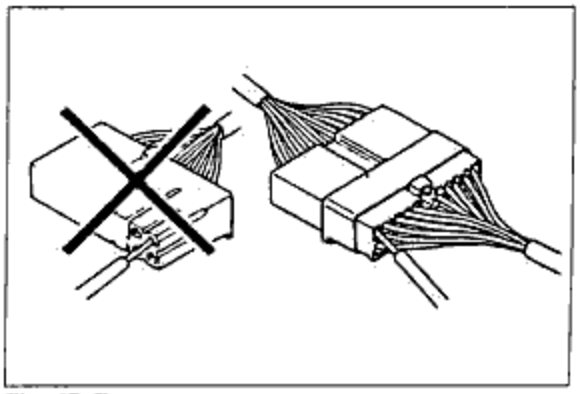
Fig. 15-7

Replacement of terminals

Use the appropriate tools to remove the terminal, as shown in the figure.
When installing a terminal, be sure to press it in until it locks securely.

(Female Type)
Insert a push-tool or thin piece of metal from the terminal side of the connector, and then, with the locking tabs of the terminal pressed down, pull the terminal out from the rear side.

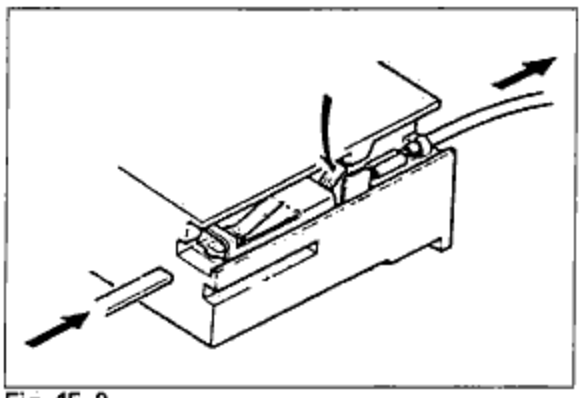

Fig. 15-8

(Male Type)
Same as the female type.

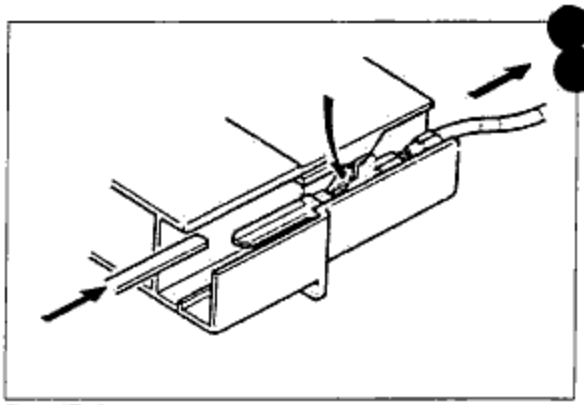

Fig. 15-9

Replacement of fuses

When replacing a fuse, be sure to replace it with one of the specified capacity.
If, after a fuse has been replaced, it fails again there is probably a short circuit in the circuit, and the wiring should be checked.

CAUTION

- **Be sure the ignition key is switched OFF before replacing a fuse.**
- **When replacing a fuse, use the supplied fuse puller.**

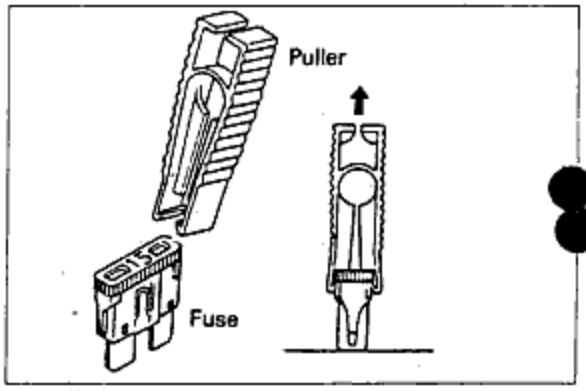

Fig. 15-10

⊠ ELECTRICAL SYMBOLS

Switch and relay

There is an NC(normally closed) and NO(normally open) indication for switches and relays: this indicates the condition when has been no change of operation conditions.

	Relay		Switch	
	NO	NC	NO	NC
Not in operation (No power supply)	Stop	Flow	Stop	Flow
In operation (Power supply)	Flow	Stop	Flow	Stop

Other electrical symbols

		Holder Box	
Battery	Body ground	Fuse	Fusible link
Motor	Coil, solenoid	Resistor	Variable resistor
Thermister	Diode	Condenser	Light
Transistor	Speaker	Cigarette lighter	Heater

◇ FUSIBLE LINK AND FUSE BOX

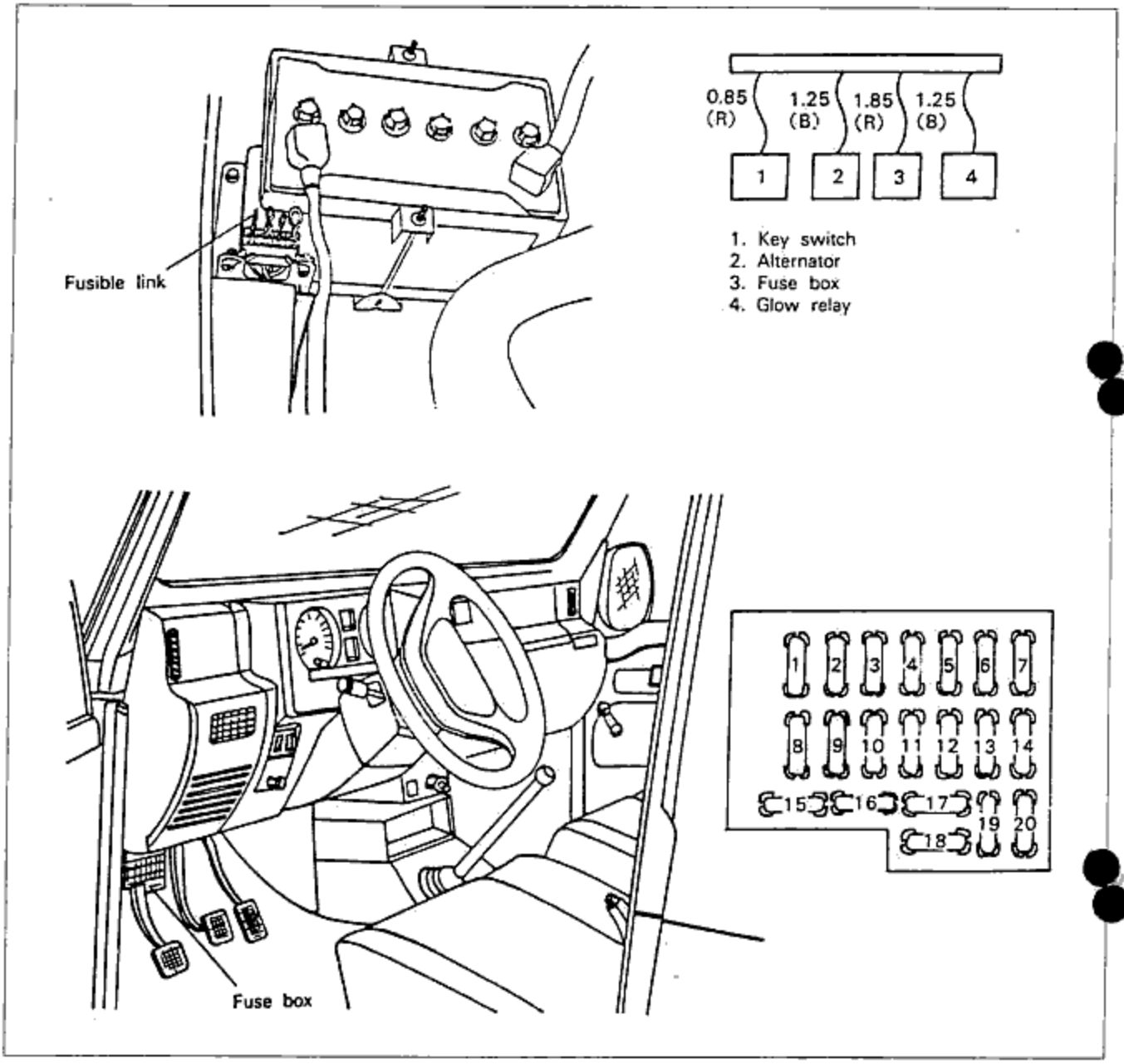

Fig. 15-11

1. Radio, cigarette lighter(15A)
2. Meter(10A)
3. Ignition(10A)
4. Wiper(15A)
5. Fan motor(30A)
6. Signal, back up lamp(10A)
7. Blackout marker lamp(10A, 5A*) (If equipped)
8. Hazard, horn(20A)
9. Clock
10. Stop lamp(10A)
11. Air conditioner(15A, 10A*)
12. Tail lamp(10A)
13. Fog lamp(15A)
14. Blackout driving lamp(10A, 5A*)
15. Spare fuse(30A)
16. Spare fuse(10A)
17. Spare fuse(15A)
18. Spare fuse(20A)
19. Heater wiring(20A)
20. Power window(30A) (If equipped)

"*": Vehicle equipped with gasoline engine.

⊠ SWITCH

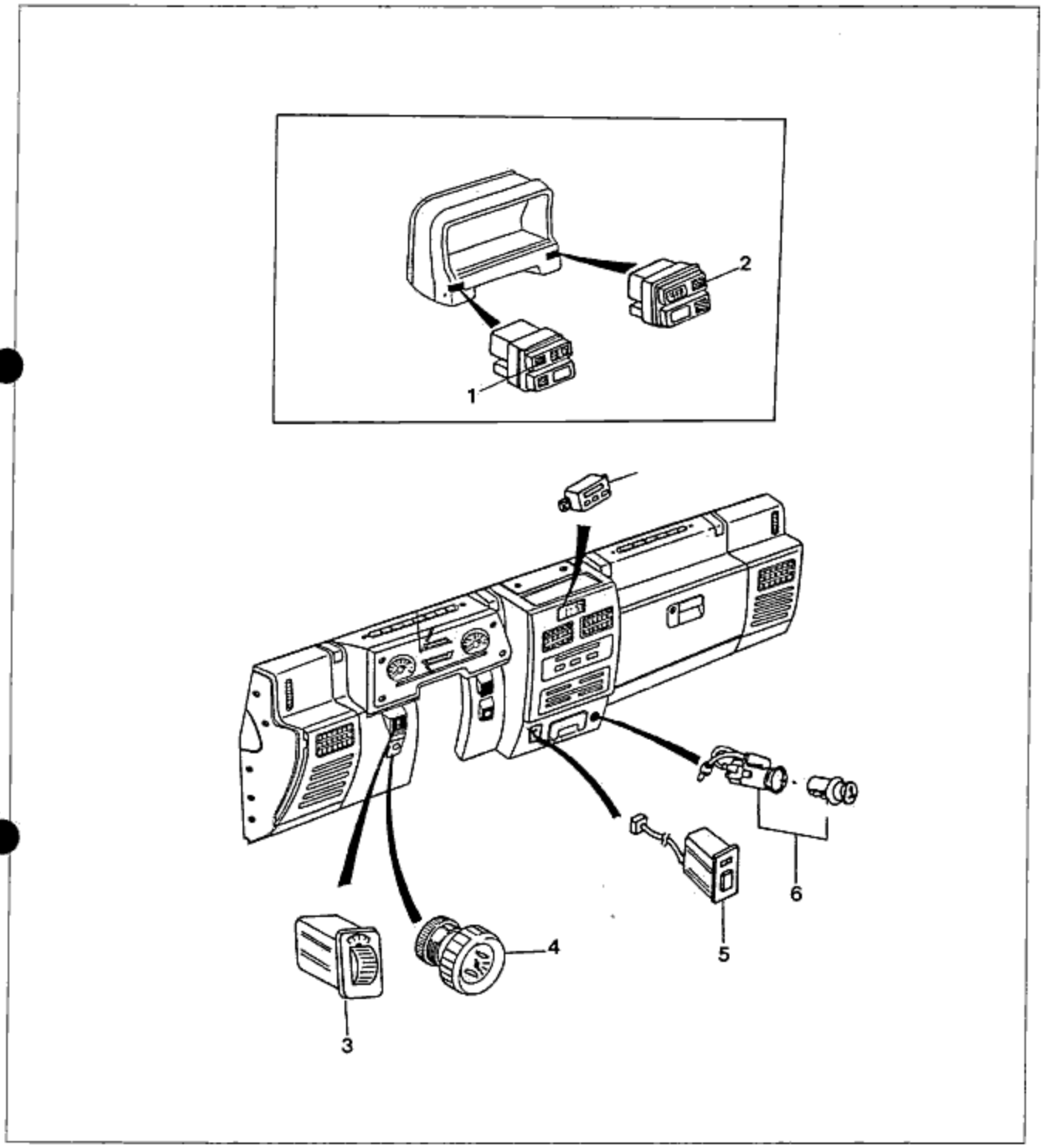

Fig. 15-12

1. Fog lamp switch(Hazard warning light*)
2. Rear window demister switch(*)
3. Light control switch(Rear fog lamp switch*)
4. Cold start device(*)
5. Air conditioner switch(*)
6. Cigarette lighter

(* : If equiped)

◆ IGNITION KEY SWITCH

Inspection

1. Use an ohmmeter to check the continuity of each terminal of the switch.
   If the continuity is not as specified, replace the switch.

Position \ Terminal	B	ACC	IG1	IG2	ST
LOCK					
ACC	O——O				
ON	O——O	—O——O			
START	O———	——O———			——O

O———O :Indicates continuity.

Removal and replacement

1. Disconnect the battery(−) terminal.
2. Remove the column covers.
3. Disconnect the connectors from the wiring harness.
4. Loosen the attaching screw.
5. Installation is in reverse order of removal.

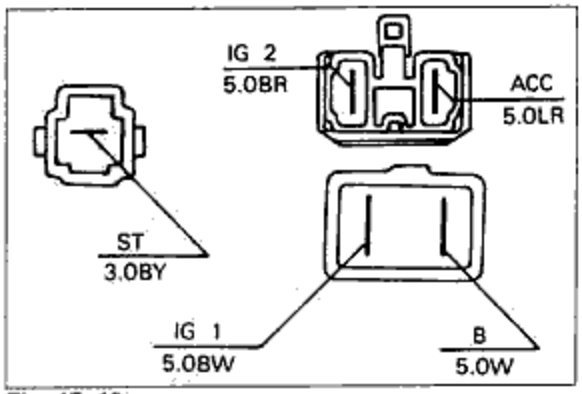

Fig. 15-13

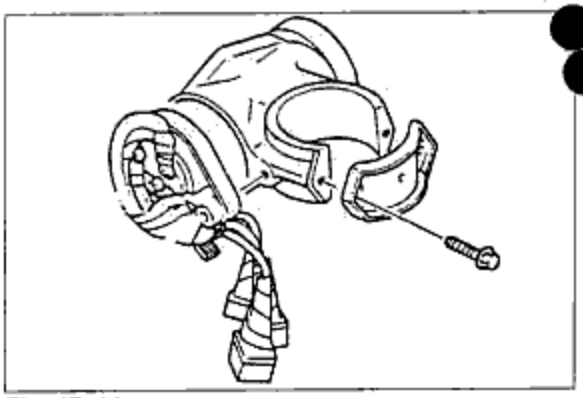
Fig. 15-14

◆ COMBINATION SWITCH

Inspection

Use an ohmmeter to check the continuity each terminal of the switch.
If continuity is not as specified, replace the switch.

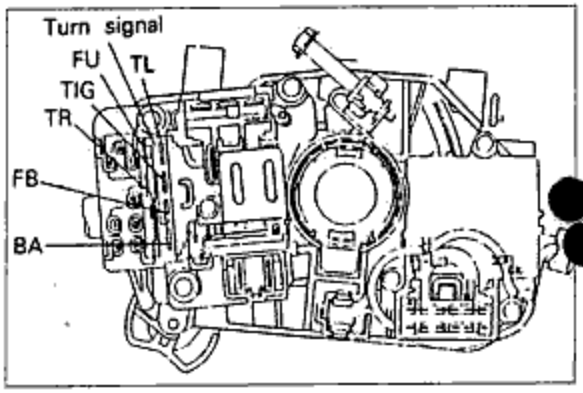

Fig. 15-15

Turn signal and hazard switch

HAZ	SIG \ T	FU	TL	TR	TIG	BA	FB
OFF	L	O——O			O———	———	——O
	N				O———	———	——O
	R	O———	———	——O	O———	———	——O
ON	L&R	O———	——O———	——O		O———	——O

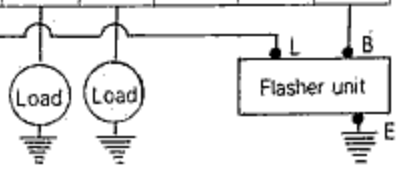

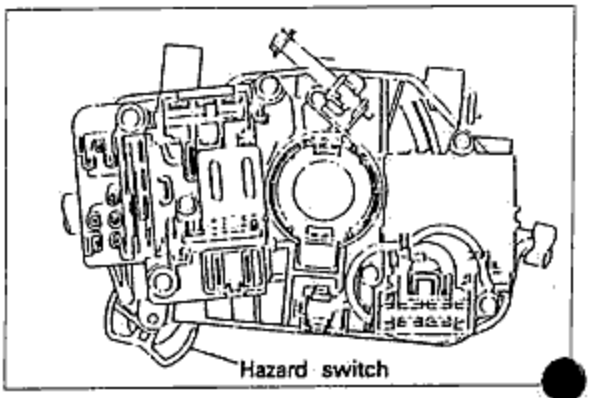

Fig. 15-16

Windshield wiper and washer switch

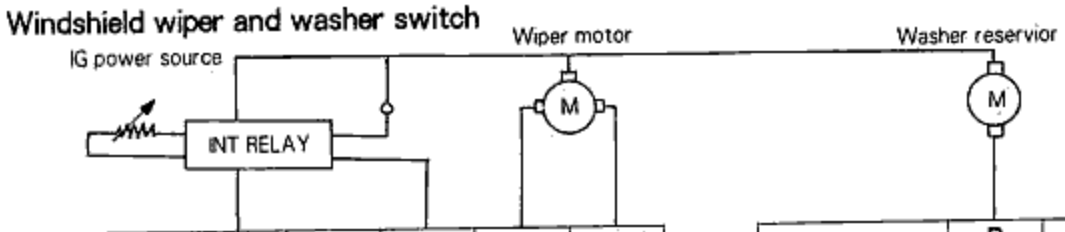

		INT	E	AS	SWL	SWH
OFF	OFF			O——	——O	
	ON		O—	———	——O	
INT		O——	——O			
LOW			O—	———	——O	
HIGH			O—	———	———	——O

	B	E
OFF		
ON	O——	——O

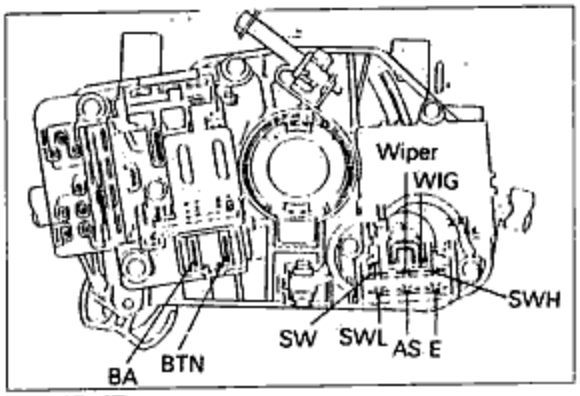

Fig. 15-17

Light and dimmer passing switch

P \ T		BTN	TNS	BA	HL	HU
OFF						
TAIL		O——	——O			
HEAD	PASS	O——	——O	O—	———	——O
	LOW	O——	——O	O—	——O	
	HIGH	O——	——O	O—	———	——O

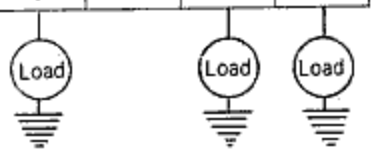

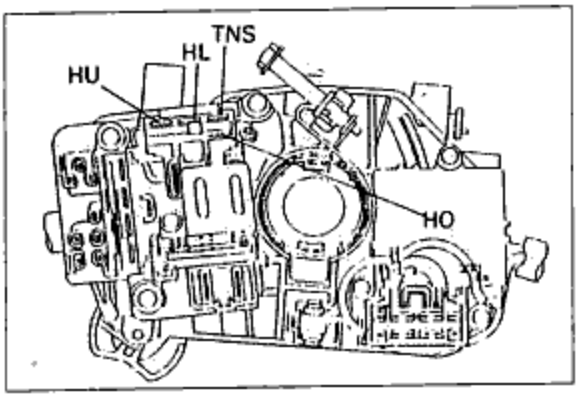

Fig. 15-18

Inspection

Use an ohmmeter to check the continuity of each terminal of the switch.
If the continuity is not as specified, replace the switch.

◆ FOG LAMP SWITCH

Position \ Terminal	A	B	C	D
OFF			○	○
ON	○——	——○	○	○

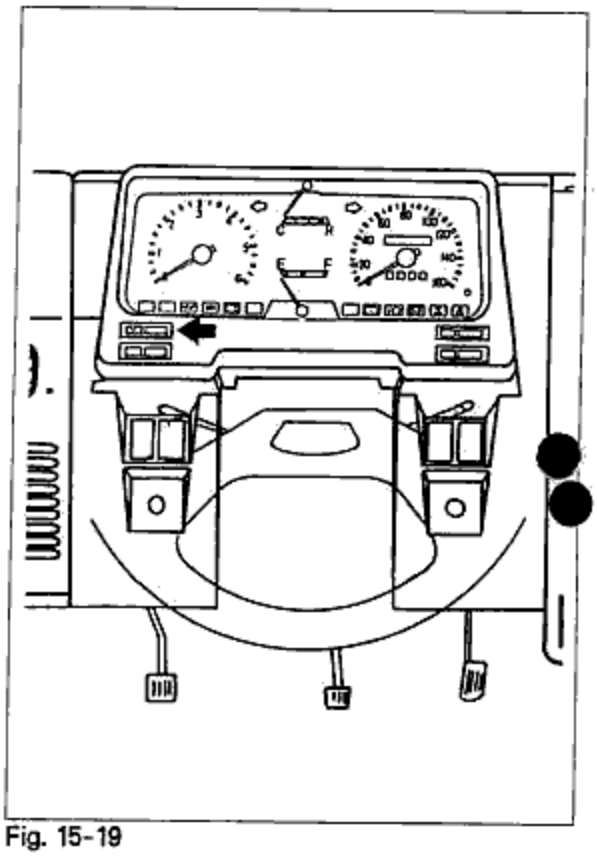

Fig. 15-19

◆ REAR DEFOGER SWITCH

Position \ Terminal	A	B	C	D
OFF			○	○
ON	○——	——○	○	○

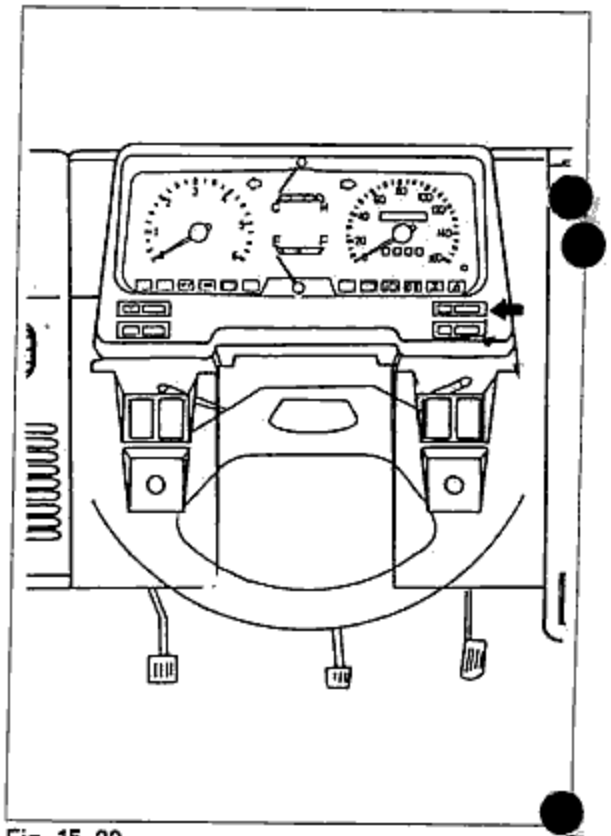

Fig. 15-20

METER AND SENSOR UNIT

STRUCTURAL VIEW

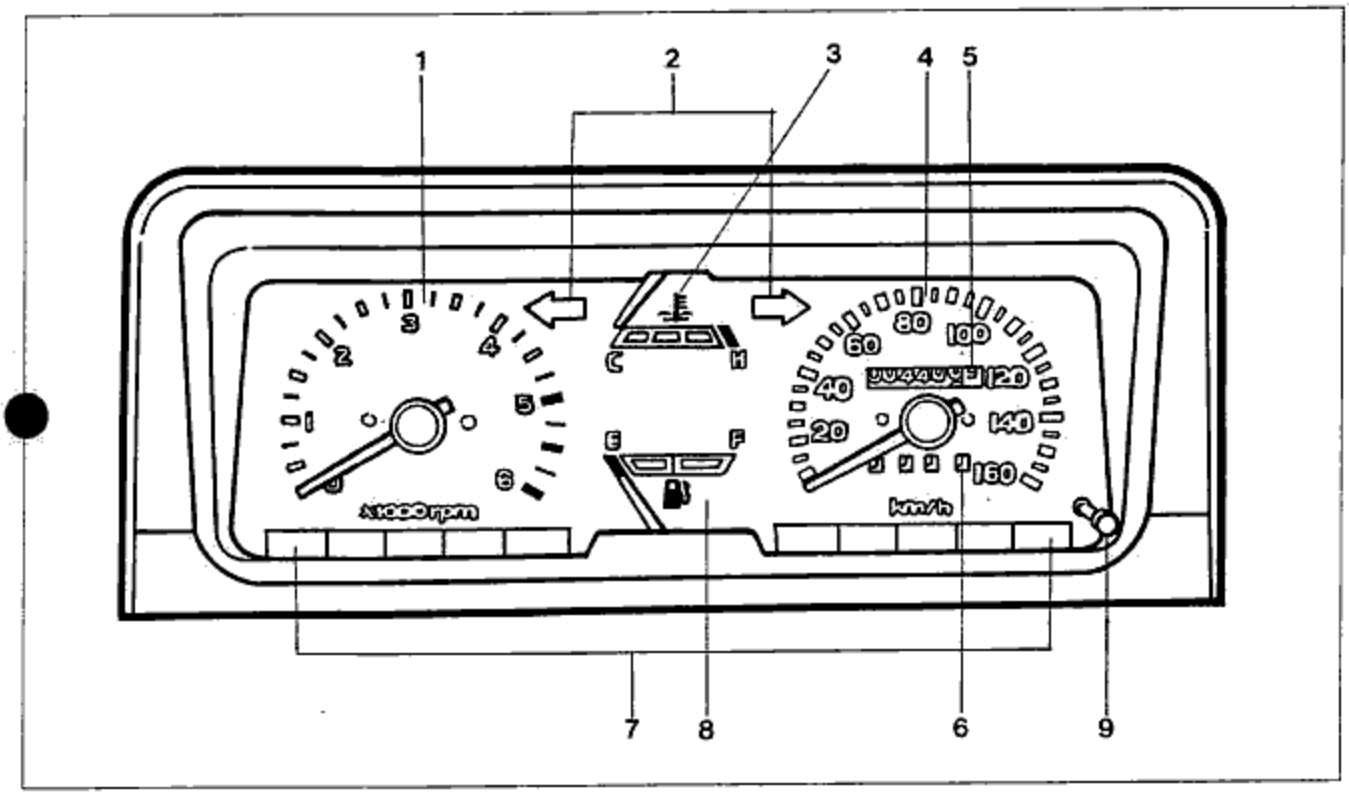

Fig. 15-21

1. Tachometer
2. Turn signal indicator light
3. Coolant temperature gauge
4. Speedometer
5. Odometer
6. Trip odometer
7. Warning and indicator lights
8. Fuel-gauge
9. Trip meter knob

TROUBLESHOOTING GUIDE

Problem	Possible cause	Remedy
Speedometer does not work	· Faulty speedometer cable · Faulty speedometer	· Replace · Replace
Speedometer fluctuation	· Faulty speedometer cable · Faulty speedometer	· Replace · Replace
Fuel gauge does not work	· Meter fuse blown · Faulty fuel gauge · Faulty fuel tank unit · Faulty ground or wiring	· Replace fuse and check for short · Check fuel gauge · Check fuel tank unit · Repair as necessary
Water temperature guage does not work	· Meter fuse blown · Faulty water temperature gauge · Faulty water temperature gauge unit · Faulty wiring	· Replace fuse and check for short · Check water temperature gauge · Check water temperature gauge unit · Repair as necessary

◈ ON-VEHICLE INSPECTION

Speedometer

1. Using a speedometer tester, test the speedometer for allowable indication error, and check the operation of the odometer.
2. Check the speedometer for fluctuation and/or abnormal noise.

CAUTION

- **If significant fluctuation occurs or the speedometer is not moving at all, remove the speedometer cable, if normal, replace the speedometer assembly.**
- **Tire wear and improper inflation will increase speedometer error.**

Reference:
Speedometer count ratio;637 REV:1km(0.6miles)

Standard indication (km/h)	rpm	Tolerance (km/h)
20	212.3	±2
40	424.7	+3 −0
60	637	+4 −0
80	849.3	+4 −0
100	1061.7	+5 −0
120	1274	+6 −0
140	1486	+7 −0
160	1698.7	+8 −0

Fuel gauge

1. Remove the connector from the fuel tank unit.
2. Connect the red lead wire of the checker(49 0839 285) to the connector, and the black lead wire to body ground.

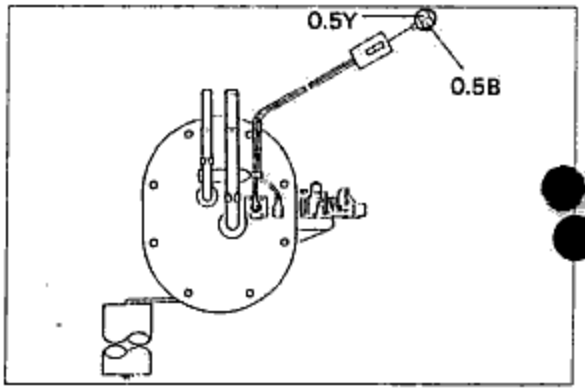

Fig. 15-22

3. When setting the checker to the resistance values shown in the figure.
   If the meter indicates that position, it is normal.

Level	Resistance (Ω)	Angle (°)	Tolerance (°)
Full	7	+30	±2.4
1/2	(32.5)	(0)	(±5)
Empty	95	−30	±2.4

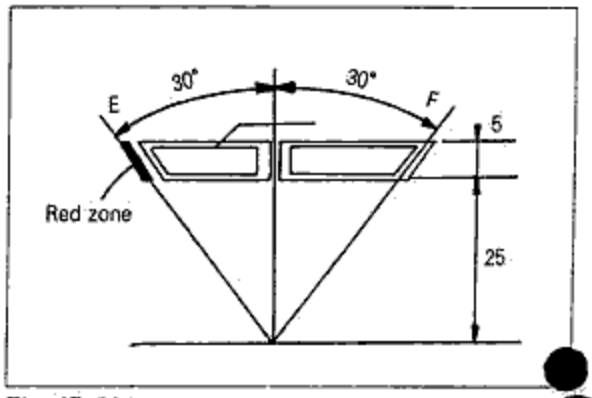

Fig. 15-23

Fuel tank unit

1. Connect an ohmmeter to the tank unit.
2. Move the unit arm slowly from point E to point F and read the resistance value. If the value is outside the standard range, replace the unit.

Flot position	F	(1/2)	E
Standard resistance(Ω)	3	(32.5)	110
Allowable error(Ω)	±2	±4	±7
Fuel capacity(ℓ)	(53.8)	(28.5)	(6.5)

( ) is reference value.

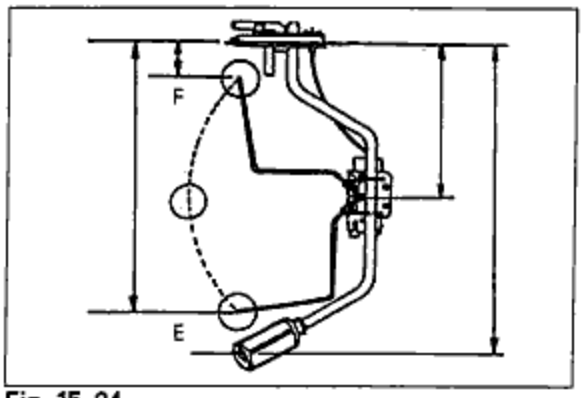

Fig. 15-24

NOTE

- **Before inspecting the fuel tank unit, remove the fuel tank.**

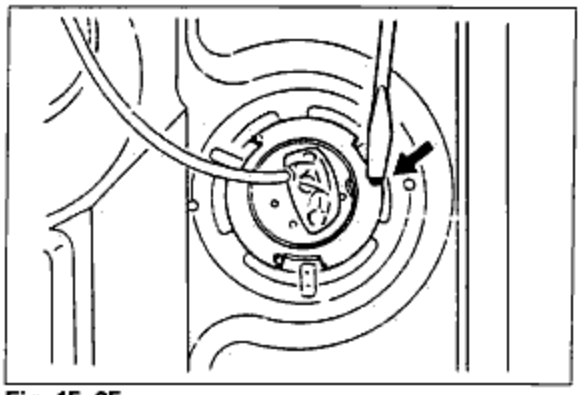
Fig. 15-25

Water temperature gauge

1. Remove the connector from the gauge unit.
2. Connect the red lead wire of the checker(49 0839 285) to the connector, and the black lead wire to body ground.
3. Set the checker to the resistance values shown in the figure.
4. Turn on the ignition switch and check to confirm that the needle indicator displays the correct values. If the needle indicator displays the correct values, the trouble is in the gauge unit;if not, the trouble is in the meter.

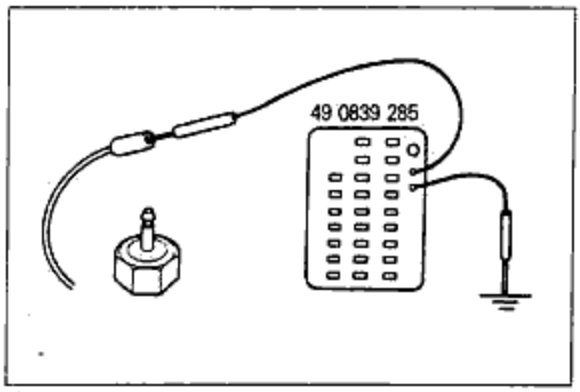

Fig. 15-26

NOTE

- **Continue the above inspections for at least two minutes each to correctly judge the condition.**
- **The allowable indication error is twice the width of the needle.**

Temp (℃)	Resistance (Ω)	Angle (°)	Tolerance (°)
60	102	−30	—
80	53.5	−15	±4.5
100	30	5	±4.5
115	20.7	20	—
120	18	25	—

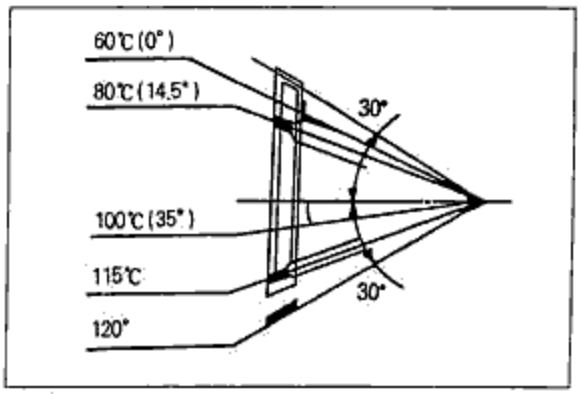

Fig. 15-27

Water temperature gauge unit

1. Remove the gauge unit.
2. Place the gauge unit in a container of water, and heat the water to 80℃(176°F)
3. Use an ohmmeter to measure the resistance.

Water temperature	Resistance(Ω)
80℃(176°F)	53.5±4.2

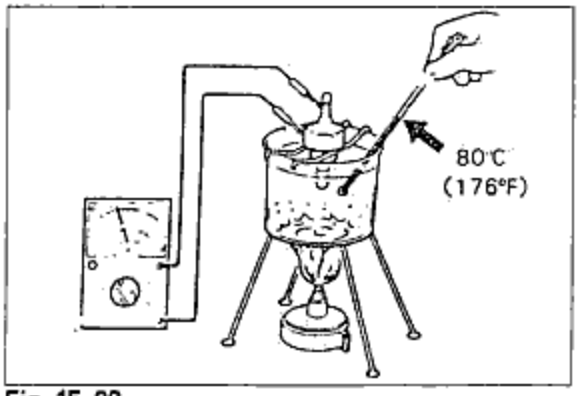

Fig. 15-28

WINDSHIELD WIPERS

REMOVAL AND INSTALLATION

Disconnect the negative ⊖ battery cable. Remove the parts in the numbered order shown in the figure. Installation is in reverse order of removal.

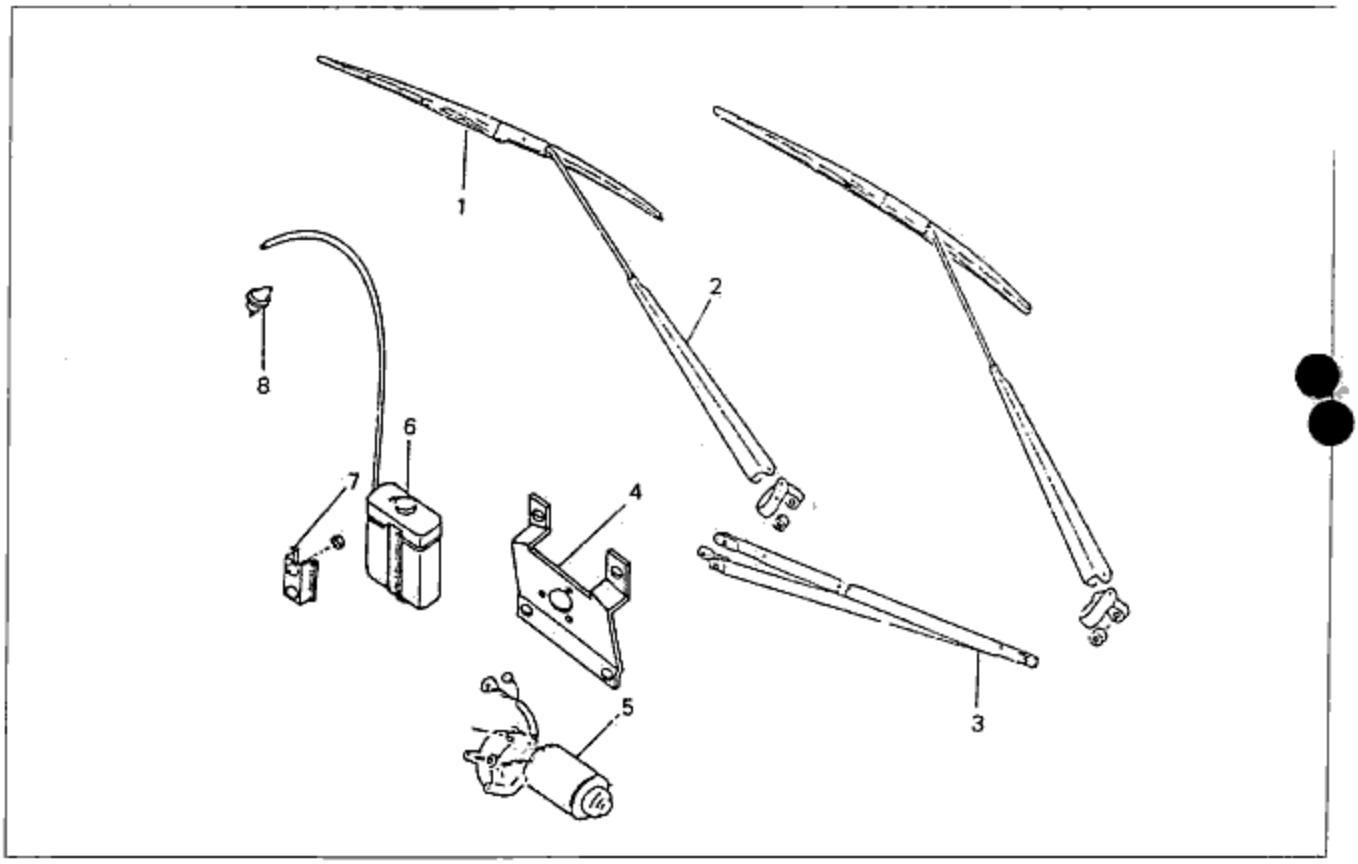

Fig. 15-29

1. Wiper blade
2. Wiper arm
3. Link
4. Wiper motor bracket
5. Wiper motor
6. Tank
7. Hanger
8. Washer nozzle

◈ INSPECTION

Front wiper motor

Connect the battery and an ammeter to the wiper motor as shown in the figure and check the motor rotation and current.

Wiper speed	No-load (rpm)	No-load current	Connection (terminal)		Remarks
			Ground	Battery	
HIGH	69~95	Less than 3.0A	Blue/red	Blue	Connect ammeter between battery and terminal(blue)
LOW	50~60		Blue/white		
AUTO STOP			Black		Connect lead wire between blue/white and blue/black terminals

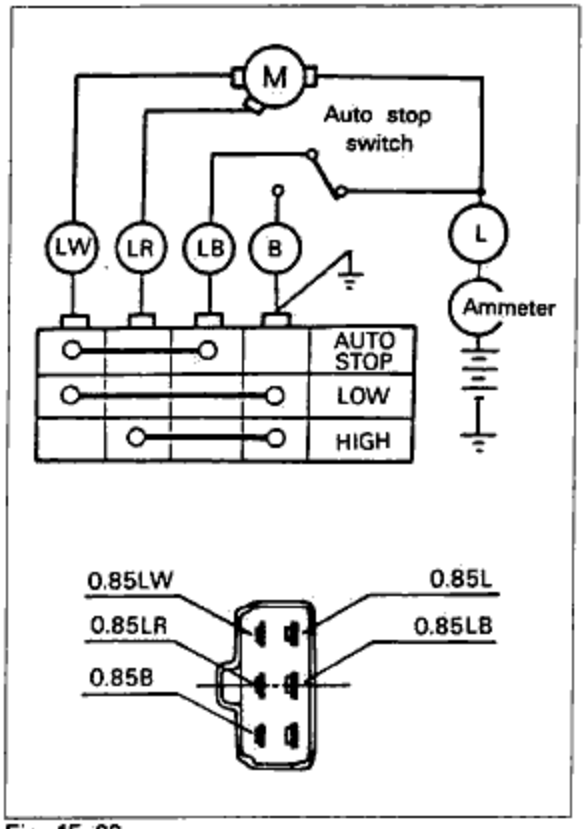

Fig. 15-30

Front washer motor

Connect the battery to the front washer motor as shown in the figure and check the washer motor rotation

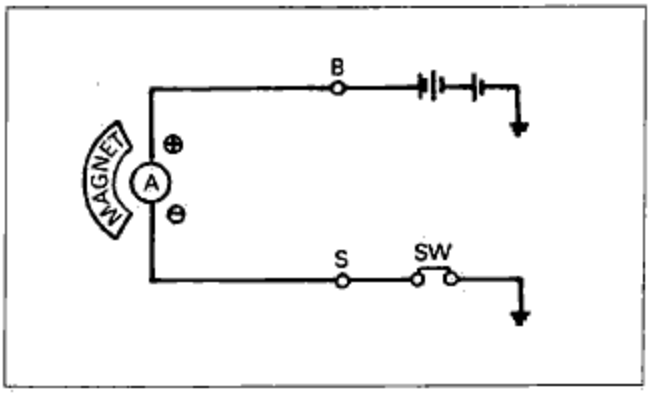

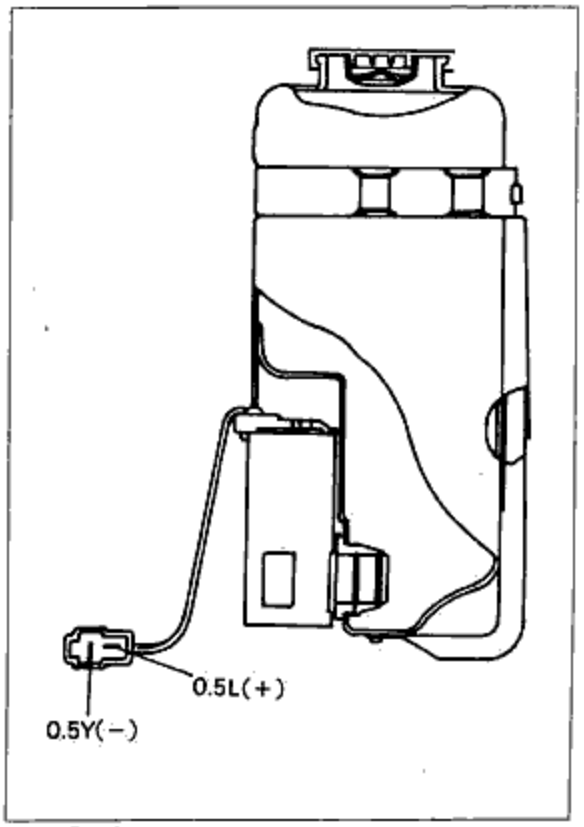

Fig. 15-31

NOTE

- Make matching marks on the wiper motor, when removing the wiper link assembly from wiper motor.
- Align the wiper link with the mark on the wiper motor, when installing the wiper link assembly to the wiper motor.
  The automatic-stop angle is approximately 20.5°.

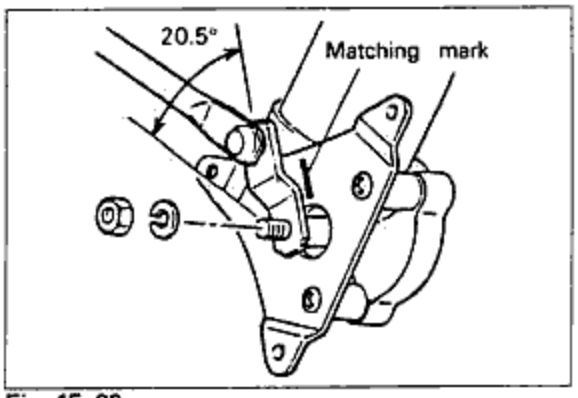

Fig. 15-32

◆ ADJUSTMENT

Arm height

Adjust the arm height as shown in the figure, and tighten the arm to the specified torque.

Tightening torque: 1.0~1.4kg·m(7~10ft·lb)

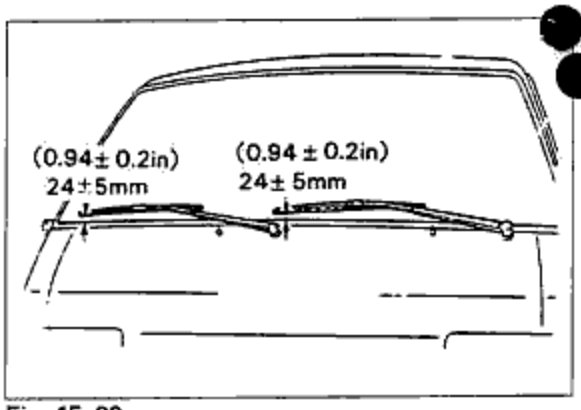

Fig. 15-33

Washer spray

Adjust the arm of the washer spray nozzle by inserting a needle or similar object into the hole of the nozzle.

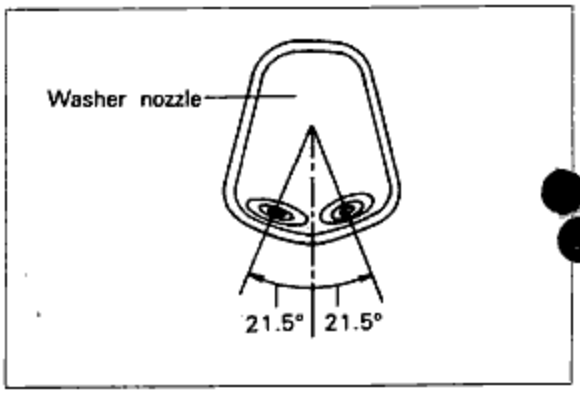

Fig. 15-34

HEATER

STRUCTURAL VIEW

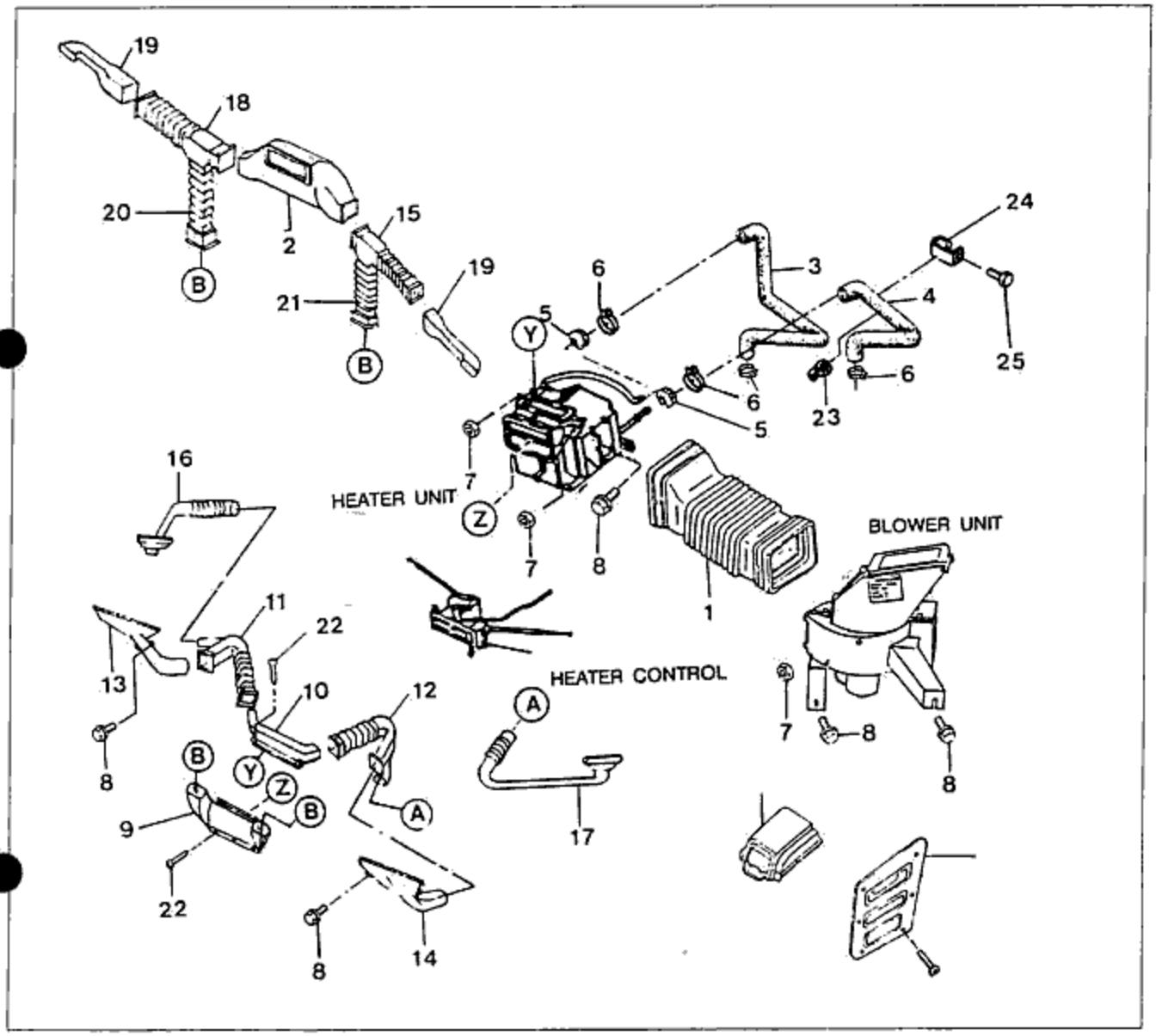

Fig. 15-35

1. Air duct
2. Center duct
3. Heater inner hose
4. Heater outer hose
5. Grommet
6. Clip
7. Flange nut
8. Flange bolt
9. Heater No. 1 duct
10. Heater No. 2 duct
11. VENT. duct(LH)
12. VENT. duct(RH)
13. Defroster duct(LH)
14. Defroster duct(RH)
15. VENT. cross duct(RH)
16. Back mirror duct(LH)
17. Back mirror duct(RH)
18. VENT. cross duct(LH)
19. VENT. side duct
20. Center duct(LH)
21. Center duct(RH)
22. Screw
23. Band
24. Hose clip
25. Machine screw
26. Air intake duct assembly
27. Air intake cover
28. Tapping screw

FRONT LAMP

STRUCTURAL VIEW

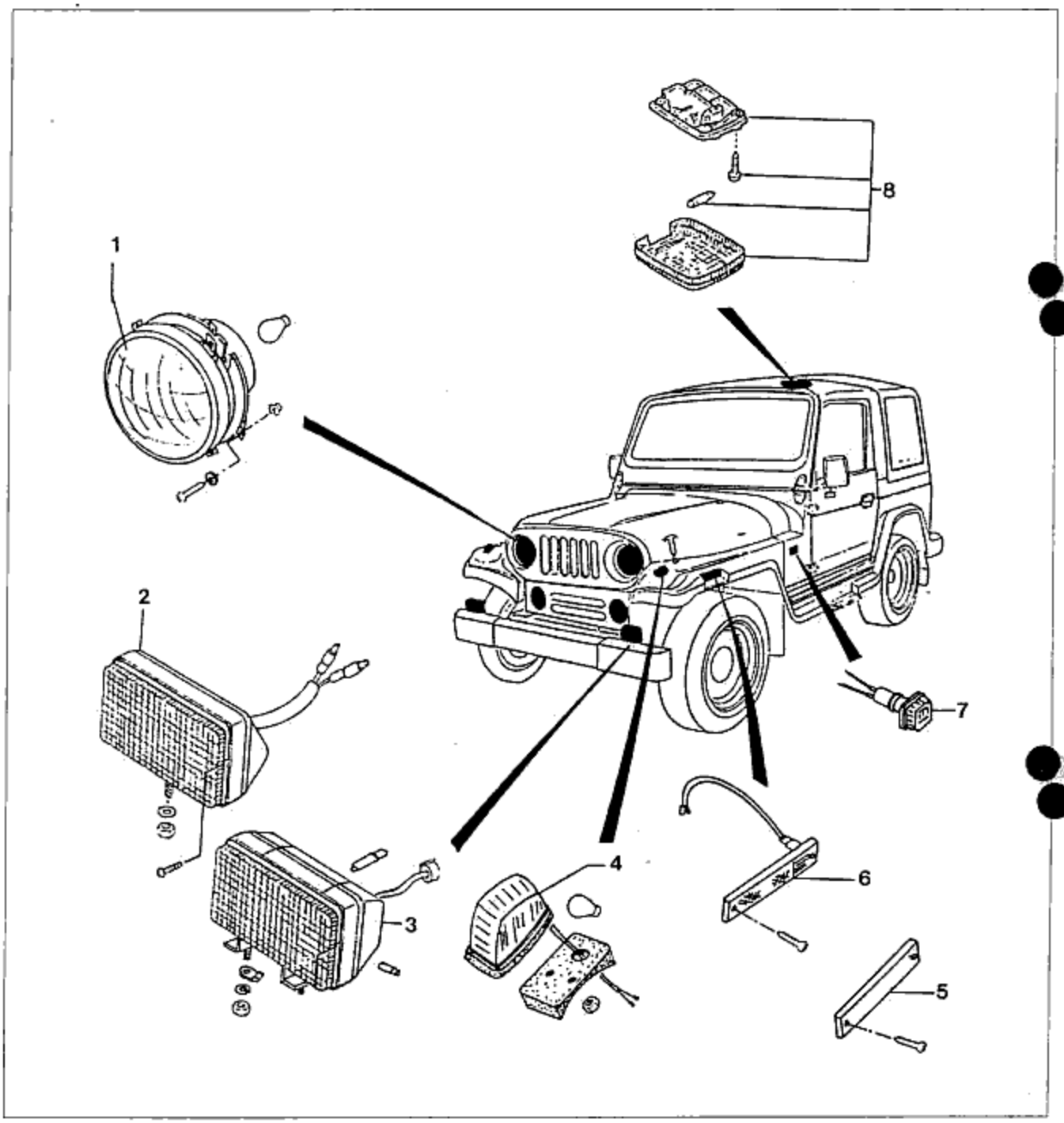

Fig. 15-36

1. Head lamp
2. Front turn signal lamp(*)
3. Head lamp(Low)(*)
   (* : If equipped)
4. Front turn signal lamp(*)
5. Side lamp cover(*)
6. Side turn signal lamp(*)
7. Side turn signal lamp(*)
8. Room lamp ASS'Y

REAR LAMP

STRUCTURAL VIEW

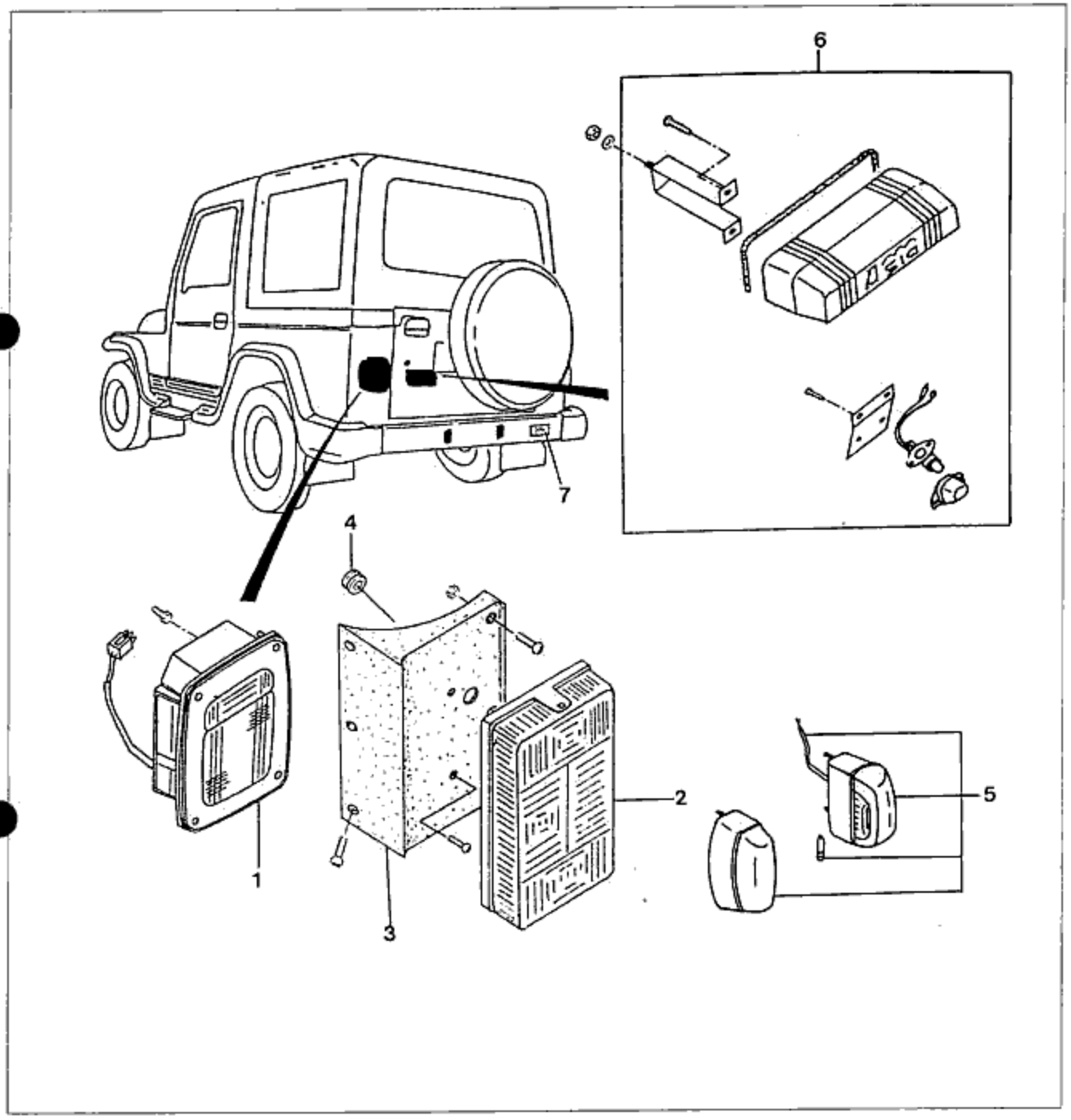

Fig. 15-37

1. Rear combination lamp(*)
2. Rear combination lamp(*)
3. Mounting rubber(*)
4. Gromet
(* : If equipped)
5. License lamp ASS'Y(*)
6. License lamp ASS'Y(*)
7. Reverse lamp

AUDIO SYSTEM

STRUCTURAL VIEW

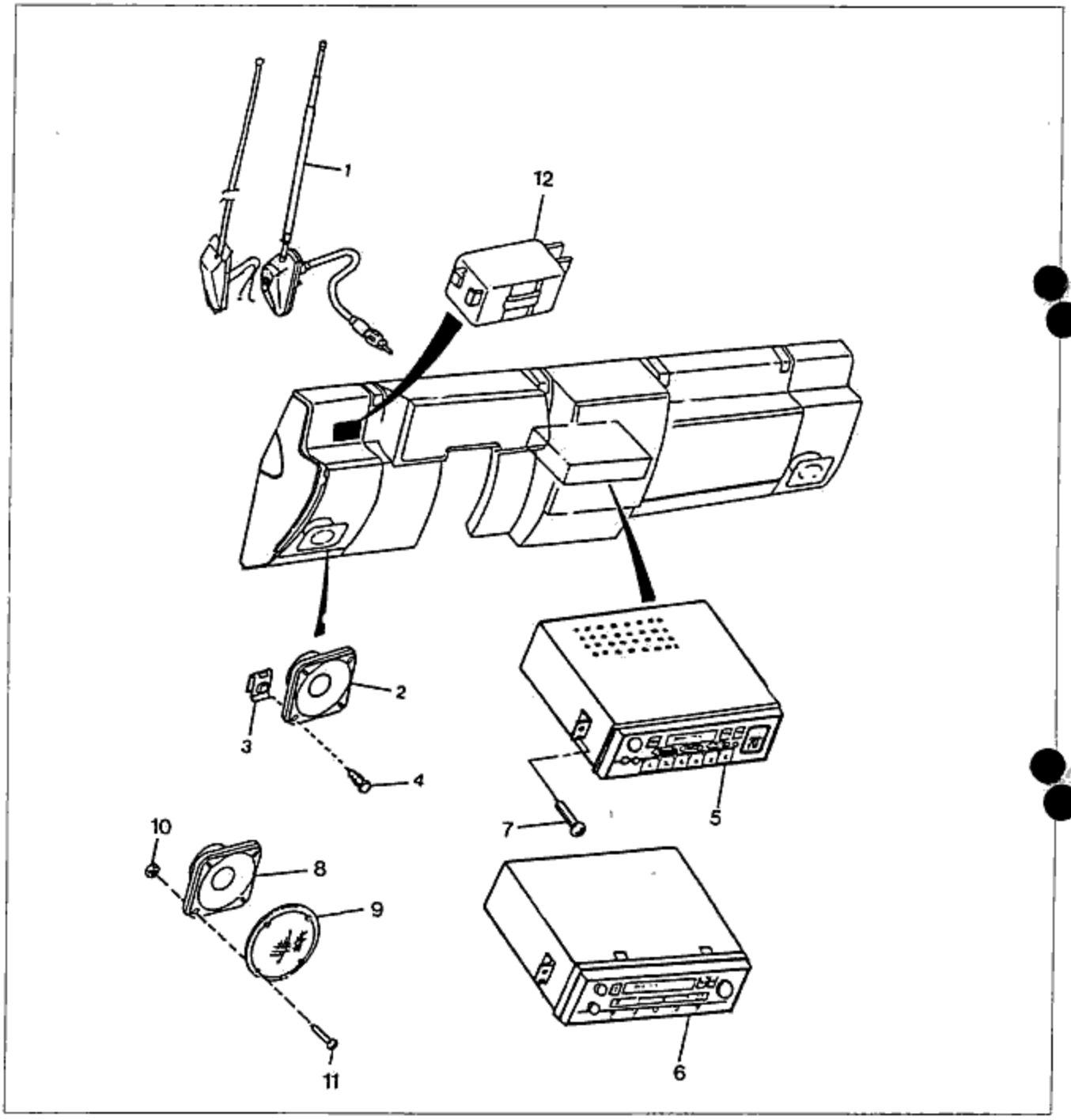

Fig. 15-38

1. Antenna ASS'Y
2. Front speaker
3. "U" nut
4. Screw
5. 3-combi radio(electric tuning radio)
6. 3-combi radio(Manual)
7. Bolt
8. Rear speaker
9. Rear speaker grill
10. Nut
11. Machine screw
12. Time buzzer

TECHNICAL DATA

22

- ENGINE ..... 22—2
- LUBRICATING SYSTEM ..... 22—4
- COOLING SYSTEM ..... 22—5
- FUEL SYSTEM ..... 22—5
- ENGINE ELECTRICAL SYSTEM ..... 22—6
- CLUTCH ..... 22—7
- TRANSMISSION ..... 22—7
- PROPELLER SHAFT ..... 22—8
- REAR AXLE ..... 22—9
- STEERING ..... 22—9
- BRAKES ..... 22—10
- WHEELS AND TIRES ..... 22—10
- SUSPENSION ..... 22—11
- BODY ELECTRICAL SYSTEM ..... 22—11

ENGINE

Item \ Engine model			MAGMA	JF8 F/B CAR.
TYPE			Diesel, four-cycle	Gasoline, four-cycle
Number and arrangement of cylinders			Four cylinders, in-line	←
Type of combustion chamber			Swirl flow type	Multispherical
Bore and stroke mm×mm(in×in)			86×94(3.39×3.7)	86×77(3.39×3.03)
Total piston displacement cc			2184	1789
Compression ratio			22.9±0.4:1	8.6:1
Valve system			Direct drive, OHC	OHC, Belt driven
VALVE TIMING				
Intake valve	Open(BTDC)		10°	19°
	Close(ABDC)		42°	51°
Exhaust valve	Open(BBDC)		57°	57°
	Close(ATDC)		11°	13°
Firing order			1–3–4–2	←
Idling speed			700~750	750~800
DRIVE BELT				
Deflection mm(in)	Alternator	New	10~12(0.39~0.47)	6 ~ 8(0.24~ 0.31)
		Used	9~11(0.35~0.43)	10~12(0.39~10.47)
CYLINDER HEAD				
Valve clearance mm(in)		Intake	0.20~0.30(0.008~0.012)	0.30(0.012)
		Exhaust	0.30~0.40(0.012~0.016)	0.30(0.012)
Cylinder head distorsion limit mm(in)			0.15(0.006)	0.15(0.0059)
Lengthe of cylinder head bolt below head mm(in)		Standard	112.7~113.3(4.437~4.460)	–
		Limit	114.5(4.508)	–
VALVE SEAT				
Seat sinking mm(in)	Intake	Standard	0.75~1.05(0.030~0.041)	←
		Wear limit	2.55(0.100)	←
	Exhaust	Standard	0.75~1.05(0.030~0.041)	←
		Wear limit	2.55(0.100)	←
Seat angle (°)		Intake	45	←
		Exhaust	45	←
Seat width mm(in)		Intake	1.7~2.3(0.067~0.091)	0.5~1.5(0.02~0.06)
		Exhaust	1.7~2.3(0.067~0.091)	0.5~1.5(0.02~0.06)
Standard valve stem diameter		Intake	7.970~7.985(0.3138~0.3144)	←
		Exhaust	7.965~7.980(0.3136~0.3142)	←
Valve stem to guide clearance limit mm(in)		Intake	0.10(0.004)	0.20(0.008)
		Exhaust	0.10(0.004)	0.20(0.008)
TAPPET				
Standard outer diameter mm(in)			34.96~34.98(1.3763~1.3771)	←
Standard tappet hole diameter mm(in)			34.99~35.02(1.3776~1.3787)	←
Clearance between tappet hole and outer mm(in)		Standard	0.02~0.06(0.0008~0.0024)	←
		Limit	0.10(0.0040)	←
CAMSHAFT				
Cam height mm(in)	Intake	Standard	44.31(1.744)	38.202(1.504)
		Wear limit	43.90(1.728)	38.002(1.496)
	Exhuast	Standard	45.30(1.783)	38.202(1.504)
		Wear limit	44.90(1.768)	38.002(1.496)

Item \ Engine model			MAGMA	JF8 F/B CAR.
Journal mm(in)	Elliptical limit		0.05(0.002)	←
	Diameter	Standard	31.96~31.98(1.258~1.259)	–
		Limit	31.86(1.254)	–
Camshaft deflection limt mm(in)			0.10(0.0040)	0.03(0.0012)
Camshaft end play mm(in)		Standard	0.02~0.15(0.00079~0.0059)	0.08~0.16(0.003~0.006)
		Limit	0.2(0.008)	0.2(0.008)
CONNECTING ROD AND CONNECTING ROD BEARING				
Rod bearing limit mm(in)			Less than 0.16(0.006) per 100(3.94)	Less than 0.075(0.003) per 50(1.97)
Rod bushing mm(in)	Inner diameter		25.01~25.03(0.9846~0.9854)	–
	Clearance limit		0.05(0.002)	–
Rod end play mm(in)		Standard	0.11~0.26(0.0043~0.0102)	0.11~0.26(0.004~0.010)
		Limit	0.35(0.014)	0.30(0.012)
Oil clearance mm(in)		Standard	0.03~0.06(0.0012~0.0024)	0.027~0.067(0.0010~0.0026)
		Limit	0.08(0.0031)	0.10(0.0039)
Undersize connecting rod bearing mm(in)			0.25(0.010),0.50(0.020),0.75(0.030)	←
CRANKSHAFT AND MAIN BEARING				
Crankshaft deflection limit mm(in)			0.05(0.002)	0.03(0.0012)
Crankpin diameter mm(in)		Standard	50.94~50.96(2.006~2.007)	←
		Limit	0.05(0.0020)	←
		Grinding limit	0.75(0.0295)	←
Main journal diameter mm(in)		Standard	59.94~59.96(2.360~2.361)	←
		Limit	0.05(0.0020)	←
		Grinding limit	0.75(0.0295)	←
Rear housing oil seal sliding surface diameter mm(in)			89.95~90.00(3.541~3.543)	←
Main journal bearing oil clearance mm(in)		Standard	0.031~0.049(0.0012~0.0019)	←
		Limit	0.08(0.0031)	←
Under size bearings mm(in)			0.25(0.010),0.50(0.020),0.75(0.030)	←
Crankshaft end play mm(in)		Standard	0.04~0.28(0.0016~0.0111)	0.08~0.282(0.0031~0.0111)
		Limit	0.3(0.0118)	0.3(0.0118)
Thrust bearing width mm(in)		Standard	2.18~2.23(0.0858~0.0878)	–
		Undersize	2.00~2.05(0.0787~0.0807)	–
CYLINDER BLOCK, PISTON AND PISTON RING				
Limit of distortion limit mm(in)			0.15(0.0060)	0.15(0.006)
Cylinder bore mm(in)	Standard		86.00(3.39)	86.00~86.019(3.3859~3.3866)
	Limit		85.85(3.380)	86.15(3.392)
	Difference between bores		0.022(0.0009)	0.019(0.0007)
Piston standard outer diameter mm(in) Diameter measured at 90° to pin bore axis and 19mm(0.75in) below the oil ring groove			85.95~85.98(3.384~3.385)	85.944~85.964(3.3837~3.3845)
Piston and cylinder clearance limit mm(in)			0.15(0.006)	←
Oversize piston rings mm(in)			1.0(0.040), 0.50(0.020)	←
Piston ring opening clearance limit, the ring in the cylinder mm(in)			1.0(0.039)	–
Clearance limit, piston and ring groove mm(in)			0.2(0.008)	0.15(0.006)
Ring groove width mm(in)		Top	2.04~2.06(0.0803~0.811)	1.52~1.54(0.0598~0.0606)
		Second	2.03~2.05(0.0799~0.0807)	1.52~1.54(0.0598~0.0606)
		Oil	4.02~4.04(0.1583~0.1591)	←
Piston ring thickness mm(in)		Top	2.04~2.06(0.0803~0.0811)	1.17~1.19(0.0579~0.0587)
		Second	2.03~2.05(0.0799~0.0807)	1.17~1.19(0.0579~0.0587)

Item / Engine model		MAGMA	JF8 F/B CAR.
Clearance between piston ring and ring groove mm(in)	Top	0.05~0.09(0.0020~0.0035)	0.037~0.07(0.0012~0.0028)
	Second	0.04~0.08(0.0016~0.0031)	0.037~0.07(0.0012~0.0028)
	Wear limit	0.20(0.0079)	0.15(0.006)
Piston ring end gap mm(in)	Top	0.20~0.40(0.0079~0.0157)	0.2~0.3(0.008~0.014)
	Second	0.20~0.40(0.0079~0.0157)	0.15~0.3(0.006~0.012)
	Oil	0.20~0.40(0.0079~0.0157)	0.3~0.9(0.012~0.035)
	Wear limit	1.0(0.039)	←
Piston pin	Diameter mm(in)	24.994~25.000(0.9840~0.9843)	21.974~21.980(0.8651~0.8654)
Tightening torque		**kg·m(ft·lb)**	
Cylinder head bolts		Initial torque 3kg·m+Tighten each bolt 90°+90° more	8.2~8.8(59~63)
Tensioner		3.2~4.7(23~34)	2.0~3.5(14~25)
Timing belt cover		0.7~1.0(5~7)	Low:0.7~1.0(5~7) Up:0.8~1.2(5.8~8.6)
Crankshaft pulley		2.3~3.3(17~24)	1.25~1.75(9~12)
Camshaft caps		2.0~2.7(15~20)	1.8~2.7(13~19)
Connecting rod bearing caps		7.0~7.5(51~54)	6.6~7.0(48~51)
Rear cover assembly		0.7~1.0(5~7)	0.8~1.2(5.8~8.6)
Oil pump assembly	M8 smaller	1.6~2.3(12~17)	1.9~3.1(13~22)
	M10 bigger	3.2~4.7(23~34)	3.8~5.3(27~38)
Oil strainer		0.7~1.0(5~7)	0.8~1.2(5.8~8.6)
Oil pan		0.7~1.0(5~7)	0.7~1.2(5~8.6)
End plate		1.6~2.3(12~17)	1.9~3.1(14~22)
Timing belt pulley		16~17(116~123)	←
Oil pressure switch		1.2~1.8(9~13)	1.2~1.8(8.6~13)
Water pump		3.2~4.7(23~24)	1.9~2.6(14~19)
Camshaft pulley		5.6~6.6(41~48)	4.8~6.6(35~48)
Injection pump pulley		6.0~7.0(43~52)	–

⊠ LUBRICATING SYSTEM

Item / Engine model		MAGMA	JF8 F/B CAR.
Lubricating method		Force-fed type	←
OIL PUMP			
Type		Inner gear type	←
Oil pressure at 3,000 rpm of engine speed kg/cm²(lb/in²)		4.1~4.9(58~70)	3.0~4.0(50~64)
Outer gear tooth tip and crescent clearance mm(in)	Standard	0.06~0.23(0.0024~0.0091)	0.20~0.32(0.0078~0.0126)
	Limit	0.35(0.0137)	←
Inner gear tooth tip and crescent clearance mm(in)	Standard	0.10~0.21(0.0039~0.0083)	0.267~0.38(0.0105~0.015)
	Limit	0.35(0.0137)	0.40(0.016)
Side clearance mm(in)	Standard	0.03~0.09(0.0012~0.0035)	0.03~0.063(0.0012~0.0025)
	Limit	0.15(0.006)	0.10(0.004)
Pump shaft and body clearance mm(in)	Standard	0.06~0.15(0.0024~0.0059)	0.09~0.184(0.0035~0.0072)
	Limit	0.20(0.078)	←
OIL FILTER			
Type		Full flow, paper filter	←
Total oil capacity liters(U.S.qt., Imp.qt.)		6.4(6.76, 5.63)	4.6(4.86, 4.05)

Item / Engine model	MAGMA	JF8 F/B CAR.
Oil pan capacity liters(U.S.qt., Imp.qt.)	5.0(5.28, 4.40)	3.8(4.01, 3.34)
Oil filter capacity liters(U.S.qt., Imp.qt.)	0.4(0.42, 0.35)	0.3(0.32, 0.26)
Oil warning lamp activation pressure kg/cm²(lb/in²)	0.3(4.3)	←
Oil cooler type	Water cooled	–
ENGINE OIL		
Classification	A.P.I. Service CC, CD	A.P.I Service SE, SF

Tightening torque		kg·m(ft·lb)	
Oil filter		By hand+1/4 turn	
Oil pan		0.9~1.2(6.4~8.6)	0.7~1.2(5~9)
Oil pump	M8 bolt	1.6~2.3(11.4~16.4)	1.9~2.6(13.7~18.8)
	M10 bolt	3.2~4.7(22.8~33.6)	3.8~5.3(27.5~38)
Oil pressure switch		1.2~1.8(8.6~12.9)	←

COOLING SYSTEM

Item / Engine model		MAGMA	JF8 F/B CAR.
Fan belt tension (10kg force) mm(in)	New belt	9~11(0.35~0.43)	6~8(0.24~0.31)
	Used belt	10~12(0.39~0.47)	10~12(0.39~0.47)
Fan	Type	Thermomodulated	Electric
	Number of blades	8	4
	Outer diameter mm(in)	380(15.0)	300(11.8)
Thermostat	Opening temp. ℃(°F)	82±1.5(179.6~34.7)	82(179.6)
	Full-open temp. ℃(°F)	95(203)	←
	Full-open lift mm(in)	8.5(0.34) or more	←
Water pump	Type	Centrifugal, timing belt driven	←
Radiator	Type	Corrugated	←
	Cap valve opening pressure kg/cm²(lb/in²)	0.9±0.15(12.8±2.13)	0.75~1.05(10.7~14.9)
Cooling method		Water-cooled	←
Coolant capacity	With heater liters(U.S.qts., Imp.qts.)	9.0 (9.5, 7.9)	7.0 (7.4, 6.1)
	Without heater liters(U.S.qts., Imp.qts.)	8.5 (9.0, 7.5)	–
Cooling water level		Between FULL and LOW	←
ANTIFREEZE SOLUTION			
Protection		Specific gravity of mixture at 20℃(168°F)	←
Above -16℃(3°F)		1.054	←
Above -26℃(-15°F)		1.066	←
Above -40℃(-40°F)		1.078	←

FUEL SYSTEM

Item / Engine model		MAGMA	JF8 F/B CAR.
Idle speed rpm		700~750	750~800
Idle up and exhaust control heating system			
Standard speed rpm	Air-con. Swtich ON	800±25	–

Item \ Engine model		MAGMA	JF8 F/B CAR.
FUEL INJECTION PUMP			
Type		VE type	–
Plunger diameter mm(in)		8.0(0.315)	–
Cam lift mm(in)		2.2(0.09)	–
Governor		Half-variable speed governor	–
Injecting timing		2° ATDC	
INJECTION NOZZLE			
Type		Throttle type	–
Number of nozzle and diameter mm(in)		1~1.0(0.039)	–
Injection pressure kg/cm²(lb/in²)		135(1,920)	–
ACCELERATOR LINKAGE			
Free play of cable at injection pump mm(in)		1~3(0.04~0.12)	–
Fuel tank capacity liters(U.S.qts., Imp.qts.)		65(68.7, 57.2)	←
Fuel filter type		Cartridge, water-detector	Filter paper
Air cleaner element type		Filter paper element	–
Fuel pump	Type		Diaphragm type
	Injection pressure	–	0.23~0.30cm²/kg(2.84~4.26)(lb/in²)
	Injection rate	–	860cc/min(56.7 cu in/min) at idle
Air cleaner	Fresh-hot Switching	–	Diaphragm type
	Element	–	Dry type

◇ ENGINE ELECTRICAL SYSTEM

Item \ Engine model		MAGMA	JF8 F/B CAR.
CHARGING SYSTEM			
Battery 20 hour rate	Type	PT 85	MF 60
	Capacity Ah	85	60
Level of electrolyte mm(in)		Between "Upper" and "Lower"	←
Specific gravity at 25℃(77°F)	Recharge at	1.20	←
	Fully charged	1.25~1.27	←
Alternator	Type	Alternating	←
	Voltage capacity V-A	12/55	←
No-load test	Voltage(adjustment) V	14.7±0.3	←
	Current A	5 or less	←
	Speed(engine) rpm	2,000~2,500	←
Regulated voltage V * No load at 5,000 rpm of alternator(2,000~2,500rpm of engine)		14.7±0.3	←
Length mm(in)	Number	2	←
	Brush wear limit	6.5(0.26)	←
STARTING SYSTEM			
Starting motor	Type	Electromagnetic push-in type	←
	Voltage V	12	←
	Output KW	2.0	0.9

Item \ Engine model		MAGMA	JF8 F/B CAR.
GLOW PLUGS			
Glow plug	Type	Sheathed	—
	Voltage V/Ampere A	10.5/16.5	—
Firing order		1—3—4—2	—
Ignition coil	Output	—	12V
Spark plug	Type	—	BP5ES
	Plug gap	—	0.75~0.85mm(0.029~0.033in)
	Firing order	—	1—3—4—2
Distributor	Breaker type	—	Contactless(igniter)

CLUTCH

Item \ Engine model		MAGMA, JF8 F/B CAR.
Clutch control		Hydraulic type
Clutch pedal mm(in)	Type	Hanger type
	Pedal ratio	6.3
	Full stroke	144(5.7)
	Height	200.5(7.89)
	Free play	7.8~14.3(0.3~0.6)
	Distance to floor when clutch is fully disengaged 60(2.4) or more	
Clutch disc mm(in)	Type	Single dry plate
	Deflection limit	0.7(0.027)
	Wear limit	0.3(0.012) from rivet head
	Outer diameter × inner diameter × thickness	225(8.86) × 150(5.91) × 3.5(0.14)···Fly wheel side 4.1(0.16)···Pressure plate side
Master cylinder inner diameter mm(in)		15.9(5/8)
Release cylinder inner diameter mm(in)		19.1(3/4)

TRANSMISSION

Item \ Transmission type		5-speed
Transmission		
Change lever position		Floor shift
Synchromesh system		Forward:Synchromesh Reverse:slidingmesh
Gear ratio	First	Indirect type transfer:3.565 Direct type transfer:3.563
	Second	2.212
	Third	1.435
	Fourth	1.000
	Fifth	0.894
	Reverse	3.854
Specified oil		API service GL-4 or GL-5 Outside temp. −18℃(0°F) or lower:SAE 80
		Outside temp. −18℃(0°F) or higher:SAE 90 All-season type:SAE 80W-90
Oil capacity	liters(u.s.qts., Imp.quts.)	1.9(2.01, 1.67)

Item \ Transmission type		5-speed
Main shaft deflection limit mm(in)		0.03(0.001)
Clearance between synchronizer ring and flank surface of gear mm(in)	Standard	1.5(0.059)
	Limit	0.8(0.031)
Clearance between hub sleeve and release fork mm(in)	Standard	0.2~0.3(0.008~0.012)
	Limit	0.8(0.031)
Main shaft bearing between clutch housing and transmission case	Clearance between clutch housing and bearing mm(in)	0~0.1(0~0.004)
	Adjustment shim mm(in)	0.1(0.004), 0.15(0.006), 0.3(0.012)
Main shaft bearing between clutch housing and transmission	Clearance between clutch housing and bearing mm(in)	0.05~0.1(0.002~0.004)
	Adjustment shim mm(in)	0.1(0.004), 0.15(0.006), 0.3(0.012)
Counter shaft bearing between transmission and extension housing	Clearance between bearing and bearing cover mm(in)	0~0.1(0~0.004)
	Adjustment shim mm(in)	0.1(0.004), 0.15(0.006)
Bearing between transfer rear case and rear cover	Clearance between transfer rear cover and bearing mm(in)	0.05~0.1(0.002~0.004)
	Adjustment shim mm(in)	0.1(0.004), 0.15(0.006), 0.3(0.012)

⊠ PROPELLER SHAFT

Item \ Engine model			MAGMA, JF8 F/B CAR.
Dimension	Length mm(in)	Front	621~626(24.4~24.6)
		Rear	647~659(25.5~25.9)
Deflection limit mm(in)			0.4(0.0157)
Starting torque of the universal kg·cm(ft·lb)			Front 3~8(0.22~0.58), Rear 5~14(0.36~1.01)
Starting torque adjustment snap ring mm(in)			1.22(0.0480), 1.24(0.0488), 1.26(0.0496), 1.28(0.0504), 1.30(0.0512), 1.32(0.0520), 1.34(0.05280, 1.36(0.0535), 1.38(0.0543)
Universal backlash joint spider limit mm(in)			0.5(0.020)

Tightening torque		kg·m(ft·lb)
Yoke and differential		3.3~4.4(23.8~31.8)
Differential	Reduction gear	Hypoid gear
	Differential gear	Straight bevel gear

REAR AXLE

Item	Engine model	MAGMA, JF8 F/B CAR.
	Reduction ratio	4.875
Number of teeth	Ring gear	39
	Drive pinion	8
Oil	Class	GL-5, SAE 80W
	Capacity	keep on the horizontal of oil plug
Drive pinion and ring gear backlash	Standard	0.09~0.11(0.0035~0.0043)
	Minimum	More than 0.05(0.002)
	Allowable variation	Less than 0.07(0.0028)

Tightening torque	kg·m(ft·lb)
Companion flange	1.9~3.6(13.6~25.7)
Ring	7.5~8.5(53.6~60.7)
Bearing cap	3.8~5.3(27.1~37.8)
Disc plate and wheel hub	5.5~6.8(39.3~48.6)
Knuckle and spindle	3.5~5.5(25~39.3)
Caliper and flexible hose	2.2~3.0(15.7~21.4)
Caliper and adapter	5.5~6.5(39.3~46.4)
Backplate tightening nut	5.0~5.5(35.7~39.3)
Set plate	0.8~1.4(5.7~10)
Drive pinion lock nut	13~18(92.8~128.5)
Differential carrier	2.3~2.7(16.4~19.3)
King pin and knuckle	3.5~4.2(25~30)
Free-wheel hub and hub	5.5~6.5(39.3~46.4)

STEERING

Item	Engine model	MAGMA, JF8 F/B CAR.
Steering wheel mm(in)	Outer diameter	390(15.35)
	Lock to lock	Manual steering:3.8, Power steering:2.5
Gear	Type	Ball nut system
	Gear ratio	21~25:1(STD, DLX), 15.2:1(GT.)
Booster(GT.)	Type	Integral system
	Oil used	DEXRON II, FORD TYPE(M2C33F)
	Oil capacity	2 ℓ (2.11 us. quarts, 1.76 Imp quarts)
Maximum steering angle	Inner	29°
	Outer	27°
Wheel alignment	Toe-in mm(in)	3±3(0.12±0.12)
	Camberr angle	7°30′ (Power steering)
	Caster angle	6° (Manual)
	King-pin angle	8°30′ ±30′
Steering wheel effort kg(lb)		0.5~2(1.10~4.41)···during one turn of the steering wheel

Tightening torque	kg·m(ft·lb)
Steering wheel nut	4.0~5.0(29~36)
Tie-rod end lock nut	9~12(64~86)
Tie-rod end and knuckle	7.0~8.0(51~58)
Gear box bolts	7.0~8.0(51~58)
Pitman arm lock nut	21~25(150~178)
Universal joint bolt	2.2~2.7(16~20)
Drag link nut	7.0~8.0(51~58)

BRAKES

Item \ Engine model		MAGMA, JF8 F/B CAR.
Brake pedal mm(in)	Type	Suspended
	Height	211(8.31)
	Play	7~9(0.28~0.35)
	Remaining step-in distance	74(2.91) or more
	Pedal lever ratio	5.02
	Maximum stroke	162(6.38)
Master cylinder and reserve tank		
Inside diameter of master cylinder mm(in)		22.22(0.875)
Clearance between piston and cylinder mm(in)	Standard	0.04~0.125(0.002~0.005)
	Limit	0.15(0.006)
Reserve tank capacity cc		182
Front disc brake		
Type		Disc(ventilated)
Cylinder inner diameter mm(in)		57.15(2.25)
Pad dimension(width×length×thickness) mm(in)		49.0×111×10.0(1.93×4.37×0.39)
Pad thickness limit mm(in)		1.0(0.04)
Disc plate dimension(diameter×thickness) mm(in)		275×20(10.83×0.79)
Disc plate thickness limit mm(in)		18(0.71)
Disc plate deflection limit mm(in)		0.15(0.006)
Rear drum brake		
Type		Drum
Wheel cylinder inner diameter mm(in)		19.05(0.75)
Lining dimension (width×length×thickness) mm(in)		45×249.6×4.5 (1.77×9.83×0.18)
Thickness limit mm(in)		1.0(0.04)
Clearance between piston and cylinder mm(in)	Standard	0.040~0.073(0.0016~0.0028)
	Limit	0.15(0.006)
Parking brake		
Pulled with 25kg(55.1 lb) force		8~12 notches

WHEELS AND TIRES

Items	Rim size	Tire	
		Size	Air pressure
FRONT	6.00J−15	195R15RF(STD), P215/75R15(GT, DLX)	1.8kg/cm²(25.6 lb/in²)
REAR	6.00J−15		1.8kg/cm²(25.6 lb/in²)

⊠ SUSPENSION

Item \ Engine model		MAGMA, JF8 F/B CAR.
Front	Suspension type	Axle type
	Spring type	Semielliptic leaf spring
	Shock-absorber type	Cylindrical, double acting
	Stabilizer type	Torsion bar type
Rear	Suspension type	Axle type
	Spring type	Semielliptic leaf spring
	Shock-absorber type	Cylindrical, double acting

⊠ BODY ELECTRICAL SYSTEM

Item \ Engine model		MAGMA, JF8 F/B CAR.
Headlights	Hi/Low	60/55
Turn signal lights	Front	21
	Side	5
	Rear	21
Tail lights		5
License plate lights		5
Stop lights		21
Back-up lights		21
Interior lights(room)		10
Blackout driving lights		35
Blackout stop lights		12
Blackout marker lights		12
Fog lights		35
Indicator and warning lights		
Turn signals		1.2
High beam		1.2
Oil pressure		1.2
Battery		1.2
Parking brake		1.2
4×4		1.2
Sedimenter		1.2
Glow		1.2
Brake fulid		1.2
Coolant level		1.2
Brake fulid		1.2
Coolant level		1.2
Illumination lights		
Heater		3.4
Meter		1.2×4
Cigar. lighter		1.4
Radio		1.4

SPECIAL TOOLS

23

- ENGINE ..... 23—2
- CLUTCH AND TRANSMISSION ..... 23—3
- DIFFERENTIAL ..... 23—4
- BRAKE AND REAR AXLE ..... 23—4
- STEERING AND SUSPENSION ..... 23—5
- OTHER ..... 23—6

ENGINE

Tool number & description	Priority	Illustration
49 0107 680A Engine stand	A	
49 0636 100A Arm, valve spring lifter	A	
49 S120 160 Pusher, valve seal	A	
49 S120 220 Holder, tappet	A	
49 0636 165A Remover & installer, valve guide	A	
49 0223 061 Remover & installer, piston pin	B	
49 S120 215A Pulley puller	A	
49 V101 060 Brake, ring gear	A	

Tool number & description	Priority	Illustration
49 G030 005 Hanger, engine stand	A	
49 S120 222 Pivot, valve spring lifter	A	
49 S120 105 Compressor, valve spring	A	
49 S120 170 Remover, valve seal	A	
49 0552 165 Remover & installer, valve guide	A	
49 1456 010 Adaptor set, compression gauge	A	
49 1285 071 Puller, bearing	A	
49 0636 000B Transmission lifter	B	

Tool number & description	Priority	Illustration
49 9140 074 Cam lift, measuring device	A	
49 S120 255 Attachment, transmission lifter	B	

Tool number & description	Priority	Illustration
49 S120 281 Adaptor, oil pressure guage(DE)	B	
—	—	—

⊠ CLUTCH AND TRANSMISSION

Tool number & description	Priority	Illustration
49 SE01 310 Centering tool, clutch disk	A	
49 S120 440 Turning holder, main shaft lifter	A	
49 0839 425C Puller set, bearing	A	
49 0180 321A Installer, main drive gear bearing	A	
49 0500 330 Installer, transmission bearing	A	

Tool number & description	Priority	Illustration
49 0862 350 Guide, shift fork ASS'Y	B	
49 0305 430 Pusher, main drive shaft	A	
49 1243 465A Wrench, main shaft lock nut	A	
49 0187 451A Guide, interlock pin ASS'Y	B	
—	—	—

⊠ DIFFERENTIAL

Tool number & description	Priority	Illustration
49 M005 561 Hanger, diff. carrier	A	
49 0660 555 Gauge block	A	
49 8531 565 Pinion model	A	
49 0259 720 Wrench, diff. side bearing adjust nut	B	
49 0305 555 Gauge block	A	
49 0727 570 Gauge body, pinion height adjust	A	

Tool number & description	Priority	Illustration
49 S120 710 Holder, coupling flange	B	
49 1361 555 Gauge block	A	
49 V001 795 Installer, oil seal	A	
49 B001 795 Installer, oil seal	A	
49 M005 795 Installer set, oil seal	A	
49 V001 525 Installer, bearing	A	

⊠ BRAKE AND REAR AXLE

Tool number & description	Priority	Illustration
49 0259 770B Spanner, flare nut	A	

Tool number & description	Priority	Illustration
49 0221 600C Expansion tool, disk brake	B	

Tool number & description	Priority	Illustration
49 1416 635 Wrench, rear shaft bearing nut	A	
49 S120 635 Wrench, rear shaft bearing nut	A	
49 S120 620 Installer, rear shaft bearing	B	
49 S120 520 Puller, rear axle shaft bearing	A	

Tool number & description	Priority	Illustration
49 S120 748 Attachment	B	
49 B002 765 Adjust guage	A	
49 S120 645 Holder, rear shaft	A	
—	—	—

⊠ STEERING AND SUSPENSION

Tool number & description	Priority	Illustration
49 0180 510B Attachment, steering worm bearing preload measuring	B	
49 0223 695E Puller, pitman arm	B	
49 W023 585 Adjust wrench	A	

Tool number & description	Priority	Illustration
49 1205 605 Adapter, caster camber gauge	B	
49 0118 850C Puller, ball joint	B	
49 0727 575 Puller, socket joint	B	

Tool number & description	Priority	Illustration
49 1243 785 Boot installer, ball joint dust cover	B	

Tool number & description	Priority	Illustration
49 S120 785 Boot installer, ball joint dust cover	B	

OTHER

Tool number & description	Priority	Illustration
49 0187 280 Oil pressure gauge	B	
49 0839 285 Checker, fuel thermometer	A	

Tool number & description	Priority	Illustration
49 8531 855 Nut wrench	B	
49 0259 866A Inserting tool window glass	B	

A:NEED

B:SELECTI

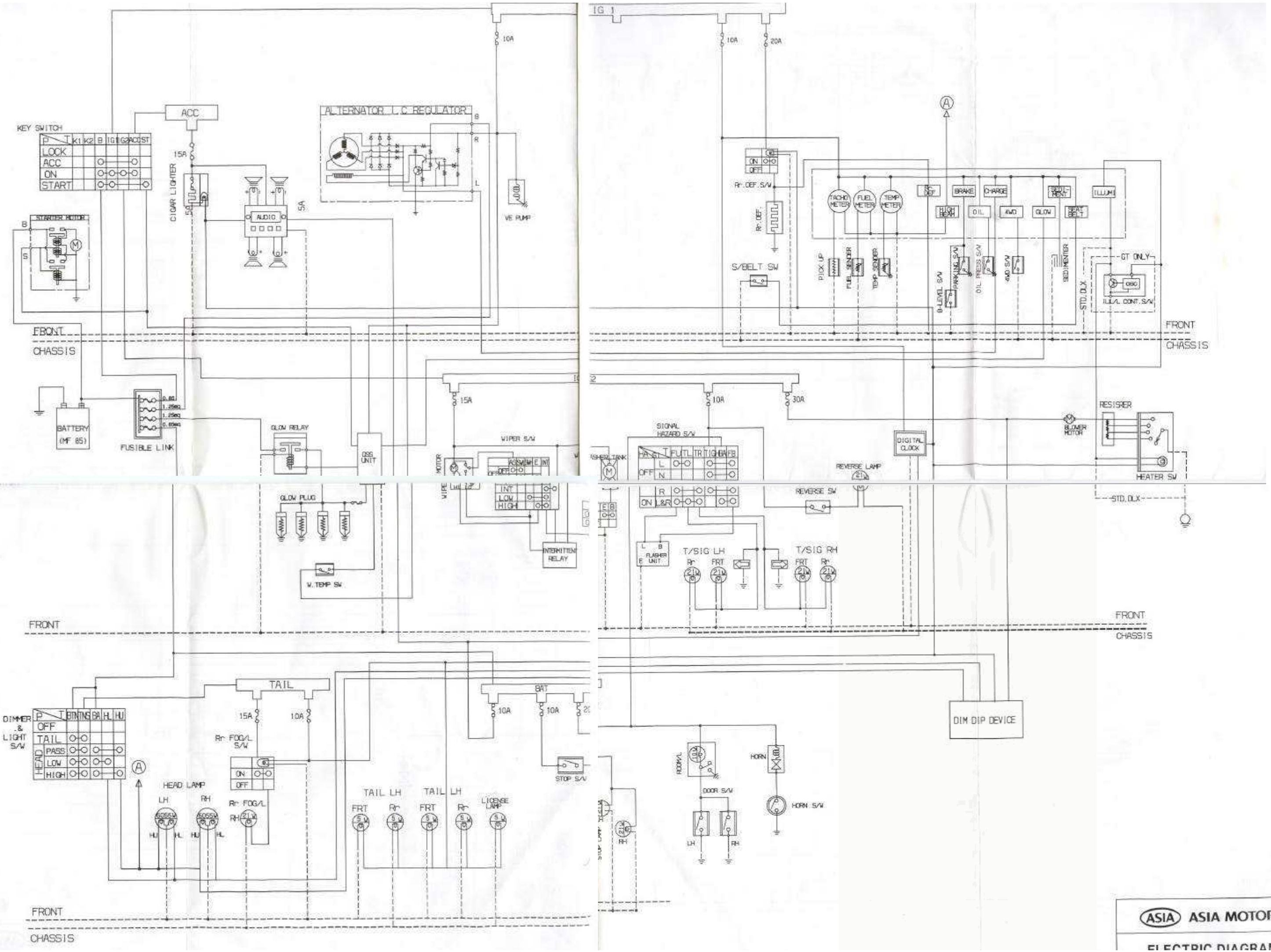
KEY SWITCH
LOCK
ACC
ON
START
ACC
ALTERNATOR I.C REGULATOR
CIGAR LIGHTER
AUDIO
STARTER MOTOR
VE PUMP
FRONT
CHASSIS
BATTERY (MF 85)
FUSIBLE LINK
GLOW RELAY
GLOW PLUG
W.TEMP SW
VIPER S/W
INTERMITTEN RELAY
DIMMER & LIGHT S/W
OFF
TAIL
PASS
LOW
HIGH
HEAD
TAIL
BAT
Rr FOG/L S/W
HEAD LAMP
LH
RH
Rr FOG/L
TAIL LH
FRT
Rr
LICENSE LAMP
STOP S/W
IG 1
IG 2
S/BELT SW
TACHO METER
FUEL METER
TEMP METER
BRAKE
CHARGE
OIL
4WD
GLOW
ILLUM
PICK UP
FUEL SENDER
TEMP SENDER
B-LEVEL S/W
PARKING S/W
OIL PRESS S/W
4WD S/W
SEDIMENTER
STD. DLX
GT ONLY
ILL/L CONT. S/W
SIGNAL HAZARD S/W
DIGITAL CLOCK
REVERSE LAMP
REVERSE S/W
BLOWER MOTOR
RESISTER
HEATER S/W
T/SIG LH
T/SIG RH
DIM DIP DEVICE
HORN
HORN S/W
DOOR S/W
ASIA MOTORS
ELECTRIC DIAGRAM

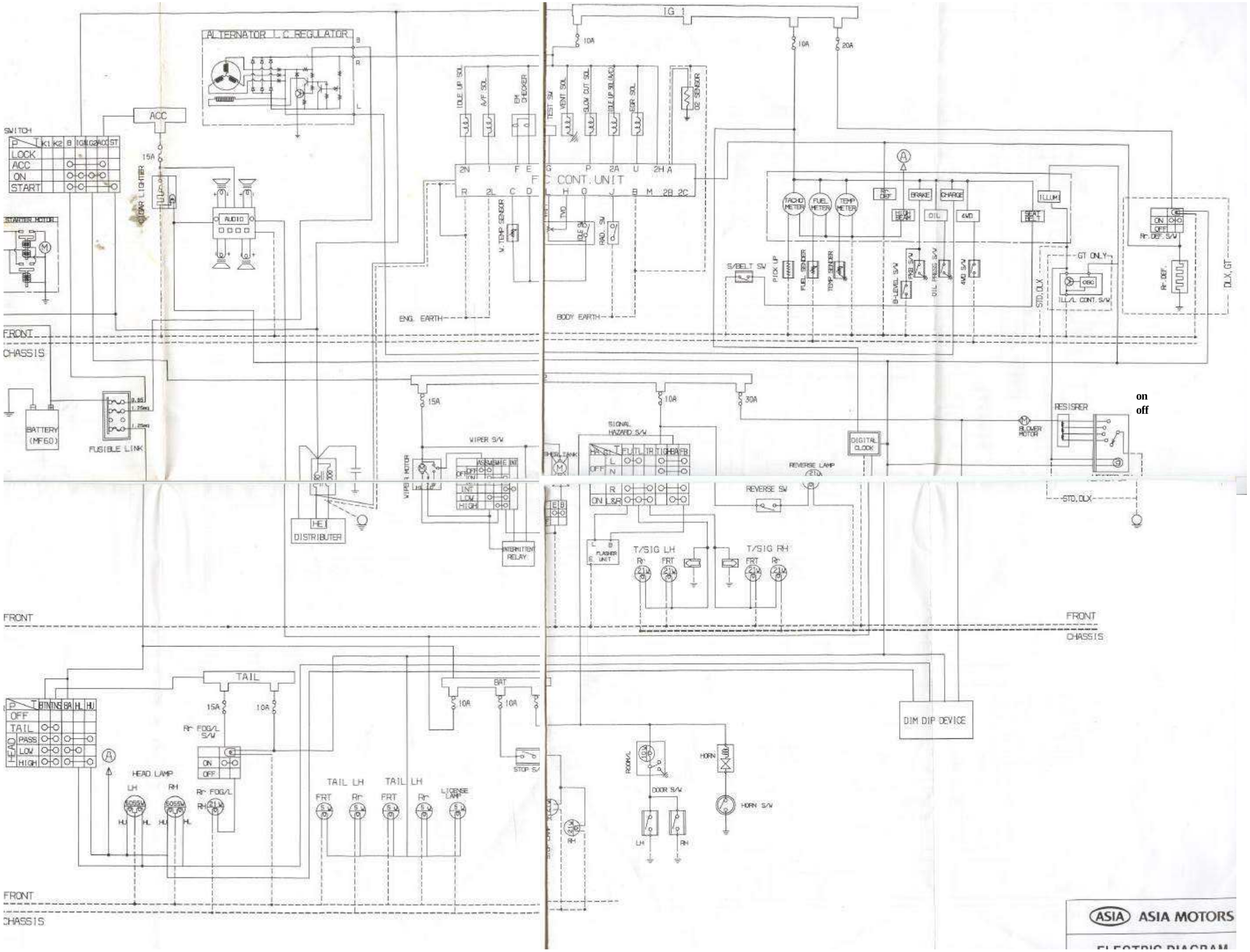
ALTERNATOR I.C.REGULATOR
IG 1
10A
10A
20A
ACC
15A
SWITCH
LOCK
ACC
ON
START
CIGAR LIGHTER
AUDIO
STARTER MOTOR
IDLE UP SOL
A/F SOL
EM CHECKER
TEST SW
VENT SOL
SLOW CUT SOL
IDLE UP SOL(MC)
EGR SOL
O2 SENSOR
F.C CONT. UNIT
W.TEMP SENSOR
IDLE SW
RAD. SW
ENG. EARTH
BODY EARTH
TACHO METER
FUEL METER
TEMP METER
RR DEF
HIGH BEAM
BRAKE
CHARGE
OIL
4WD
SEAT BELT
ILLUM
S/BELT SW
PICK UP
FUEL SENDER
TEMP SENDER
B-LEVEL S/W
PAD S/W
OIL PRESS S/W
4WD S/W
GT ONLY
ILL/L CONT. S/W
STD, DLX
Rr. DEF. S/W
Rr. DEF.
DLX, GT
FRONT
CHASSIS
BATTERY (MF60)
FUSIBLE LINK
15A
10A
30A
WIPER S/W
WIPER MOTOR
INT
LOW
HIGH
DISTRIBUTER
INTERMITTENT RELAY
SIGNAL HAZARD S/W
WASHER TANK
DIGITAL CLOCK
REVERSE LAMP
REVERSE SW
FLASHER UNIT
T/SIG LH
T/SIG RH
RESISTER
BLOWER MOTOR
on
off
STD, DLX
FRONT
CHASSIS
TAIL
BAT
15A
10A
10A
10A
Rr FOG/L S/W
ON
OFF
HEAD
OFF
TAIL
PASS
LOW
HIGH
HEAD LAMP
LH
RH
Rr FOG/L
TAIL LH
TAIL LH
FRT
Rr
FRT
Rr
LICENSE LAMP
STOP S/W
DIM DIP DEVICE
ROOM/L
DOOR S/W
HORN
HORN S/W
FRONT
CHASSIS
ASIA MOTORS